Larson Electronics LLC
9419 E US HWY 175, Kemp, TX 75143
Phone: 800.369.6671

www.LarsonElectronics.com
Email: sales@LarsonElectronics.com
Fax: 903.765.7664

RL-85-3W1-IR

Infrared LED Pistol Grip Spotlight - 15 Hour Runtime - Rechargeable Lithium Ion - 3 Watt

Product ID: 48406



Image: RL-85-3W1-IR

Larson Electronics LLC manufactures a wide variety of products, including custom built to spec designs. The pictures displayed for this unit are a general representation of form factor for the product line and may not accurately represent this exact configuration in every detail due to custom builds and changes between similar products in our standard catalog. The specifics for this configuration are listed in the specification table and supporting documentation (CAD files, Dimensional Drawing, Name Plate Diagram, Wiring Diagram, etc.). This means that specific details (receptacles, plugs, wires, connections, mounting brackets, external finishes, etc.) may not be accurately represented in images vs specifications. Please review specifications and do not order based solely on images.

RL-85-3W1-IR Spotlight
Lamp Type: Infrared LED
Dimensions: 4.5"-L 1.5"-Depth 5/8" W
Weight: 14.Oz
Watts: 3 watts
Voltage: Rechargeable- Universal Smart Charger
Materials: Aluminum - High Impact Nylon
Lamp Life Expectancy: 50,000 Hours
Battery: Lithium Ion
Charge Time: 2.5 Hours
Wavelength: 850 or 940 Nm
Beam Type: Spot

Features

Special Orders - Special Requirements
Contact us for special requirements
Toll Free: 1-800-369-6671
Intl: 1-903-270-1187
Fax: 1-903-765-7664
E-mail: sales@larsonelectronics.com

Buy American Compliant

The Larson Electronics RL-85-3W1-IR Infrared LED Pistol Grip Spotlight is an extremely rugged and effective IR spotlight designed to give users in operations requiring infrared illumination a powerful, durable and easy to use source of IR light. This IR spotlight produces an infrared light beam approximately 1,800' long by 175' wide in the 850 to 940 Nm range depending upon configuration, requires no tools for servicing and runs for 15 hours on a single charge.

This light weight, infrared LED spotlight is ergonomically designed to produce a well balanced

and easily managed handheld infrared light source that can withstand abuse under tactical conditions and operate for 15 hours on a single charge of its integrated lithium ion battery pack. This light contains a single infrared LED which is paired with a patent pending reflector design to produce an infrared light beam that reaches 1,800 feet in length and 175 feet in width. This beam is strong enough to allow operators to read signs, license plates, addresses and other similar markings at the far end of its total range. This pistol grip spotlight is designed for durability with a handle constructed of high impact nylon and an LED fully potted within a lamp assembly constructed of machined aluminum. The LED lamp assembly is protected by a thick Lexan lens and the integral lithium ion battery pack provides long battery life rated at 1,000's of charge cycles.

This IR spotlight and the materials it is constructed from are water, UV ray, impact and vibration resistant and designed to be easily field serviceable. This unit requires no tools to remove any components and the internal connectors are accessed through a snap in base at the bottom of the handle.

The Larson Electronics RL-85-3W1-IR handheld infrared spotlight from Larson Electronics was chosen as an Editor`s Choice product by Military Embedded Systems Magazine and is featured in the Editors Choice Products column of their July/August 2011 edition.



Lithium Ion Reliability: This pistol grip IR spotlight contains an integral lithium ion battery pack for the highest reliability and durability possible. This unit charges in 2.5 hours and provides 15 hours of runtime when fully charged. The lithium ion batteries used in this unit do not require special charging practices to preserve their effectiveness or longevity and can be recharged when only halfway depleted or only charged to a fraction of their full capacity and will not suffer from degradation or battery memory issues. This means you do not need to wait until the batteries are fully depleted before recharging them, nor do you need to allow them to fully recharge before using the unit. This unit can be partially recharged, used, then the recharging process can be finished later as time allows without any loss of battery life as would happen with NiCad batteries if they were used in this manner. This allows users to use this unit at any time without having to follow complex or highly inconvenient battery charging procedures. Finally, these batteries hold their charge for up to 12 months, allowing users to avoid the need for constant maintenance charging.

Durability-Convenience: The RL-85-3W1-IR Infrared LED Pistol Grip Spotlight contains a single infrared LED that is fully potted within a machined aluminum lamp housing and protected by a thick Lexan lens. This LED has an expected life span of 50,000+ hours and the entire LED lamp housing can be removed and replaced. This light is constructed of UV, water and impact resistant materials including a handle constructed of high impact nylon for extreme durability and resistance to damage from vibrations, shocks and impacts. The machined aluminum lamp housing is finished with an anodized coating for corrosion resistance. 16 gauge wiring is used to connect the internal components and an integral lithium ion battery

pack provides 16 hours of runtime and requires 2.5 hours for a full charge. The included universal smart charging unit is compatible with any voltages both domestic and international and plugs into any standard wall outlet. The smart charger that ships with this light operates automatically and will top off the battery and quit once the battery is fully charged, even if the light is left connected to the charger once fully charged.

Versatility: The entire unit weighs only 14 ounces. This light can be ordered in either 850Nm light output configuration for use with older and more common night vision devices or 940Nm light output configuration for use with the latest 4th generation night vision equipment. This light has a 3/8-16 inch brass nut fastener imbedded in the base of the handle to allow mounting this light to a tripod or magnetic base like our MM-2 or MM-5. We also offer permanent mount bases, which can be screwed into the base as well. This unit is fully field serviceable and requires no tools to disassemble or reassemble. This unit is ideal for military, security and law enforcement as well as hunting and any application that requires an extremely durable and effective source of infrared illumination.

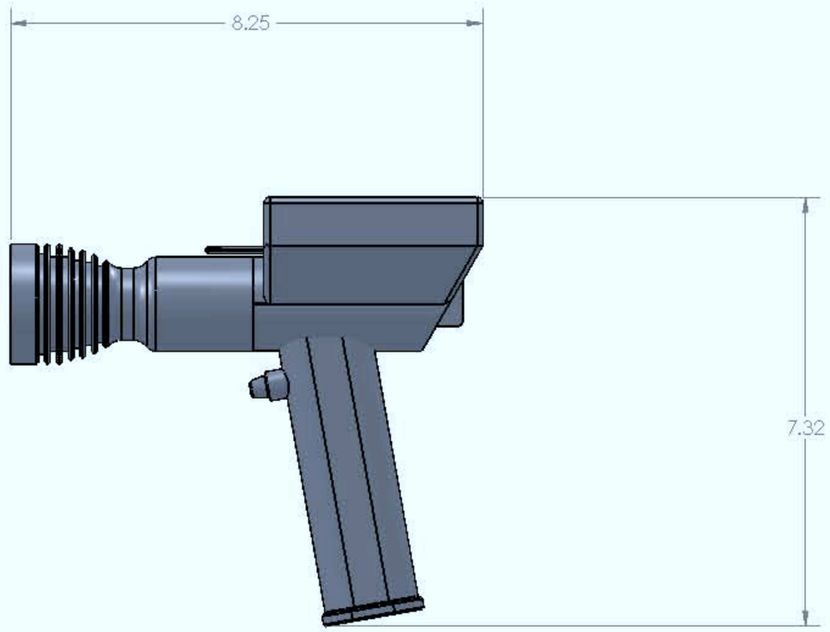

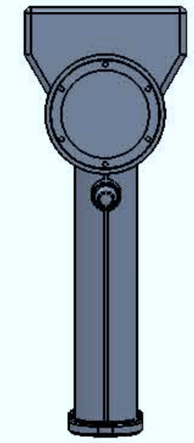

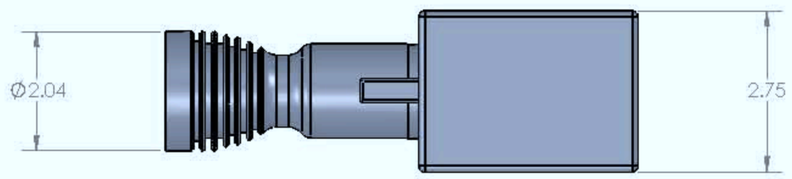

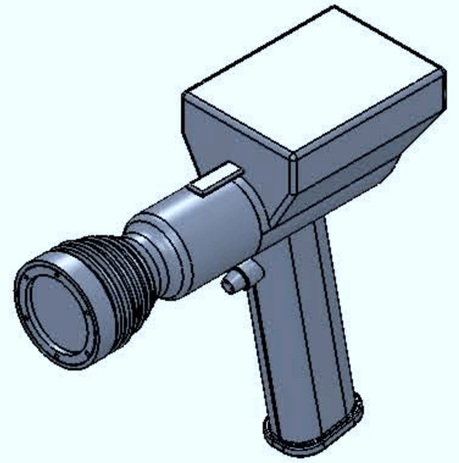

		UNLESS OTHERWISE SPECIFIED:		NAME	DATE
		DIMENSIONS ARE IN INCHES TOLERANCES: FRACTIONAL ± ANGULAR: MACH ± BEND ± TWO PLACE DECIMAL ± THREE PLACE DECIMAL ±	DRAWN		
			CHECKED		
			ENG APPR.		
			MFG APPR.		
			Q.A.		
		INTERPRET GEOMETRIC TOLERANCING PER:	COMMENTS:		
		MATERIAL			
NEXT ASSY	USED ON	FINISH			
APPLICATION		DO NOT SCALE DRAWING			

PROPRIETARY AND CONFIDENTIAL
THE INFORMATION CONTAINED IN THIS DRAWING IS THE SOLE PROPERTY OF <INSERT COMPANY NAME HERE>. ANY REPRODUCTION IN PART OR AS A WHOLE WITHOUT THE WRITTEN PERMISSION OF <INSERT COMPANY NAME HERE> IS PROHIBITED.

TITLE:

RL-85-10W1

SIZE	DWG. NO.	REV
C		

SCALE: 1:2	WEIGHT:	SHEET 1 OF 1

Larson Electronics LLC
9419 E US HWY 175, Kemp, TX 75143
Phone: 800.369.6671

www.LarsonElectronics.com
Email: sales@LarsonElectronics.com
Fax: 903.765.7664



Larson Electronics LLC
9419 E US HWY 175, Kemp, TX 75143
Phone: 800.369.6671

www.LarsonElectronics.com
Email: sales@LarsonElectronics.com
Fax: 903.765.7664



Larson Electronics LLC
9419 E US HWY 175, Kemp, TX 75143
Phone: 800.369.6671

www.LarsonElectronics.com
Email: sales@LarsonElectronics.com
Fax: 903.765.7664



Larson Electronics LLC
9419 E US HWY 175, Kemp, TX 75143
Phone: 800.369.6671

www.LarsonElectronics.com
Email: sales@LarsonElectronics.com
Fax: 903.765.7664



MATERIAL SAFETY DATA SHEET

Model ICR18650S3 Lithium Ion Rechargeable Battery

LG CHEMICAL LTD

1. Chemical Product and Company Identification

Product Identification

LG CHEM ICR18650S3 Lithium-Ion Battery

Manufacturer

LG Chemical Ltd.
Twin Tower
Youido-Dong 120, Youngdeungpo-Ku
Seoul, Korea

Emergency Telephone Number

82-2-3773-7256

2. Composition Information

Hazardous Ingredients	%	CAS Number
Aluminum Foil	2-10	7429-90-5
Metal Oxide (proprietary)	20-50	
Polyvinylidene Fluoride (PVDF)	<5	24937-79-9
Copper Foil	2-10	7440-50-8
Carbon (proprietary)	10-30	7440-44-0
Electrolyte (proprietary)	10-20	
Stainless steel, Nickel and inert materials	Remainder	N/A

* Equivalent Lithium Content: 0.66g, Electric Power Capacity: 7.92Wh

3. Hazards Identification

Emergency Overview

May explode in a fire, which could release hydrogen fluoride gas.
Use extinguishing media suitable for materials burning in fire.

Primary routes of entry

Skin contact	:	NO
Skin absorption	:	NO
Eye contact	:	NO
Inhalation	:	NO
Ingestion	:	NO

Symptoms of exposure

Skin contact
No effect under routine handling and use.

Skin absorption
No effect under routine handling and use.

Eye contact
No effect under routine handling and use.

Inhalation
No effect under routine handling and use.

Reported as carcinogen
Not applicable

4. First Aid Measures

Inhalation
Not a health hazard.

Eye contact
Not a health hazard.

Skin contact
Not a health hazard.

Ingestion
If swallowed, obtain medical attention immediately.

IF EXPOSURE TO INTERNAL MATERIALS WITHIN CELL DUE TO DAMAGED OUTER CASING, THE FOLLOWING ACTIONS ARE RECOMMENDED ;

Inhalation
Leave area immediately and seek medical attention.

Eye contact
Rinse eyes with water for 15 minutes and seek medical attention.

Skin contact
Wash area thoroughly with soap and water and seek medical attention.

Ingestion
Drink milk/water and induce vomiting; seek medical attention.

5. Fire Fighting Measures

General Hazard
Cell is not flammable. Combustion products include, but are not limited to hydrogen fluoride, carbon monoxide and carbon dioxide.

Extinguishing Media
Use extinguishing media suitable for the materials that are burning.

Special Firefighting Instructions
If possible, remove cell(s) from fire fighting area. If heated above 160°C, cell(s) may explode/vent.

Firefighting Equipment
Use NIOSH/MSHA approved full-face self-contained breathing apparatus (SCBA) with full protective gear.

6. Accidental Release Measures

On Land
Place material into suitable containers and call local fire/police department.

In Water
If possible, remove from water and call local fire/police department.

7. Handling and Storage

Handling
No special protective clothing required for handling individual cells.

Storage
Store in a cool, dry place.

8. Exposure Controls / Personal Protection

Engineering controls

Keep away from heat and open flame. Store in a cool dry place.

Personal Protection

Respirator

Not required during normal operations. SCBA required in the event of a fire.

Eye/face protection

Not required beyond safety practices of employer.

Gloves

Not required for handling of cells.

Foot protection

Steel toed shoes recommended for large container handling.

9. Physical and Chemical Properties

State	Solid
Odor	N/A
PH	N/A
Vapor pressure	N/A
Vapor density	N/A
Boiling point	N/A
Solubility in water	Insoluble
Specific gravity	N/A
Density	N/A

10. Stability and Reactivity

Reactivity
None

Incompatibilities
None during normal operation. Avoid exposure to heat, open flame, and corrosives.

Hazardous Decomposition Products
None during normal operating conditions. If cells are opened, hydrogen fluoride and carbon monoxide may be released.

Conditions To Avoid
Avoid exposure to heat and open flame. Do not puncture, crush or incinerate.

11. Toxicological Information

This product does not elicit toxicological properties during routine handling and use.

Sensitization	Teratogenicity	Reproductive toxicity	Acute toxicity
NO	NO	NO	NO

If the cells are opened through misuse or damage, discard immediately. Internal components of cell are irritants and sensitizers.

12. Ecological Information

Some materials within the cell are bioaccumulative. Under normal conditions, these materials are contained and pose no risk to persons or the surrounding environment.

13. Disposal Considerations

California regulated debris

RCRA Waste Code : Nonregulated

Dispose of according to all federal, state, and local regulations.

14. Transport Information

Lithium Ion batteries are considered to be "Rechargeable batteries" and meet the requirements of transportation by the U.S. Department of Transportation(DOT), International Civil Aviation Administration(ICAO), The 50th edition of International Air Transportation Association(IATA, 2009) special provision A45/A154 and belong to non-dangerous goods.

15. Regulatory Information

OSHA hazard communication standard (29 CFR 1910.1200)

_____Hazardous ____✔___Non-hazardous

Larson Electronics LLC
9419 E US HWY 175, Kemp, TX 75143
Phone: 800.369.6671

www.LarsonElectronics.com
Email: sales@LarsonElectronics.com
Fax: 903.765.7664

Frequently Asked Questions (FAQ)

There are no Faqs