Larson Electronics LLC
9419 E US HWY 175, Kemp, TX 75143
Phone: 800.369.6671

www.LarsonElectronics.com
Email: sales@LarsonElectronics.com
Fax: 903.765.7664

HAL-CRNM-LED15W

15W Chemical Resistant LED Light - Class 1 Div 2 - Class 2 Div 2 - Non-Metallic -Corrosion Resistant

Product ID: 47266



Image: HAL-CRNM-LED15W

Larson Electronics LLC manufactures a wide variety of products, including custom built to spec designs. The pictures displayed for this unit are a general representation of form factor for the product line and may not accurately represent this exact configuration in every detail due to custom builds and changes between similar products in our standard catalog. The specifics for this configuration are listed in the specification table and supporting documentation (CAD files, Dimensional Drawing, Name Plate Diagram, Wiring Diagram, etc.). This means that specific details (receptacles, plugs, wires, connections, mounting brackets, external finishes, etc.) may not be accurately represented in images vs specifications. Please review specifications and do not order based solely on images.

HAL-CRNM-LED15W Hazardous Location Non-Metallic LED Light

Listing: NRTL Listed for United States and Canada
Lamp Technology: A19 LED
Lamp Dimensions (Ceiling Mount): 10.84"H x 4.75"OD
Lamp Dimensions (Pendant Mount): 11.20"H x 4.53"OD
Lamp Dimensions (Wall Mount): 7.3"L x 5.19"W x 12.26"H
Weight: 3 lbs
Voltage: 120-277V AC, 12VDC or 24VDC
Total Watts: 15W
Lumens: 2,400 lms
Luminous Efficacy: 105 Lm/W
Lamp Life: 50,000+ Hours
Color Temp: 6000K, 4500K, 3000K, Red, Blue, Amber, or Green
Color Rendering Index: >80 CRI
Lamp Type: -
Lamp Base: -
Replacement Lamp: -
Beam Angle: Omni-Directional
Lighting Configuration: Steady Burn
Power Efficiency: >95%
Power Factor: 0.992

Ratings/Approvals

Class I, Division 2, Groups A, B, C, D
Class I, Zone 2, Groups IIC, IIB, IIA
Class II, Division 2, Groups F, G
IP66
NEMA 3, 4, 4X
USCG Accepted
ABS Type Approved
New York City Department of Buildings Approved
CE Certified

Amp Draw: 0.083A @ 120V, 0.042A @ 240V, 0.036A @ 277V, 0.42A @ 24V
Ambient Operating Temp Range: -50° C to +85°C
Operating Temp Rating: T2D
Housing Material: Polycarbonate
Lens Material: Hardened Borosilicate Glass
Mounting: Ceiling, Pendant, or Wall
Wiring Hub: 3/4" NPT

Special Orders - Special Requirements
Contact us for special requirements
Toll Free: 1-800-369-6671
Intl: 1-903-270-1187
Fax: 1-903-765-7664
E-mail: sales@larsonelectronics.com

The HAL-CRNM-LED15W Class I, Division 2 and Class II, Division 2 Chemical Resistant LED Light from Larson Electronics is recommended for use in hazardous locations. Capable of offering 2,400 lumens of light output, this waterproof LED equipped lamp is pendant, ceiling, or wall mounted, and available in 120-277V AC, 12V or 24V voltage configurations.

The powerful and durable HAL-CRNM-LED15W explosion proof LED light from Larson Electronics is ideal for industrial applications, hazardous work spaces, and areas where gases and vapors may be present and a powerful and durable general purpose light solution is needed. The lamp housing is waterproof, constructed of corrosion and chemical resistant polycarbonate with Pyrex globe, USCG accepted, ABS Type approved, and NEMA 4X compliant and suitable for hose-down areas. This LED lamp has a 50,000-hour operational life and is available in 120-277V AC, 12V or 24V configurations for high or low voltage operation.

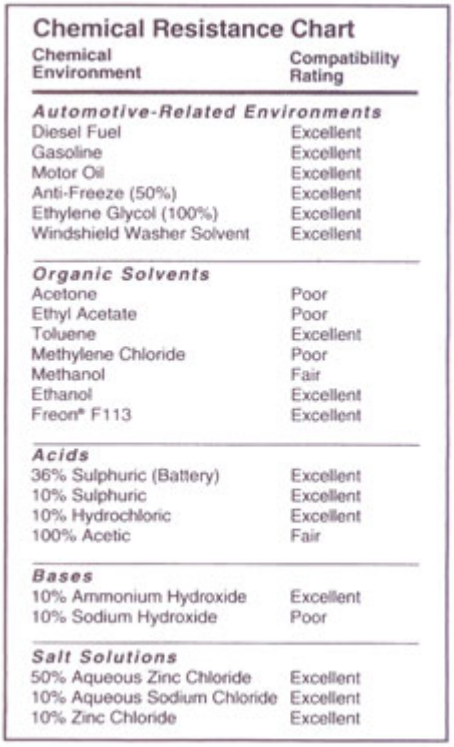

Chemical Resistance Chart

Chemical Environment	Compatibility Rating
Automotive-Related Environments	
Diesel Fuel	Excellent
Gasoline	Excellent
Motor Oil	Excellent
Anti-Freeze (50%)	Excellent
Ethylene Glycol (100%)	Excellent
Windshield Washer Solvent	Excellent
Organic Solvents	
Acetone	Poor
Ethyl Acetate	Poor
Toluene	Excellent
Methylene Chloride	Poor
Methanol	Fair
Ethanol	Excellent
Freon® F113	Excellent
Acids	
36% Sulphuric (Battery)	Excellent
10% Sulphuric	Excellent
10% Hydrochloric	Excellent
100% Acetic	Fair
Bases	
10% Ammonium Hydroxide	Excellent
10% Sodium Hydroxide	Poor
Salt Solutions	
50% Aqueous Zinc Chloride	Excellent
10% Aqueous Sodium Chloride	Excellent
10% Zinc Chloride	Excellent

Click Photo to Enlarge



Click Photo to Enlarge



Click Photo to Enlarge

Lamp: The 15-watt LED lamp used in this unit produces nearly 3 times the illumination of incandescent lamps as measured in foot candles, at less than 1/10th of the electricity usage and without the associated heat. This LED drop light runs at operating temperatures of 55° F, greatly reducing the chances of accidents or burns commonly associated with incandescent drop lights. This lamp has no ballast, which reduces lamp weight, a steel globe guard, and a stainless steel hook for easy overhead mounting. The solid state LED bulb has no filament, making it resistant to damage from impacts and dropping. This hand lamp has a high efficiency LED bulb that requires no ballast, so the operator doesn't need to drag the ballast housing around. This can be particularly annoying when the ballast becomes entangled in the cord.

LED Benefits: Unlike gas burning and arc type lamps that have glass bulbs, LEDs have no filaments or fragile housings to break during operation. Instead of heating a small filament or using a combination of gases to produce light, light emitting diodes (LEDs) use semi-conductive materials that illuminate when electric current is applied, emitting light. With LED lights, there is no warm up time or cool down time before re-striking and they provide instant illumination when powered on, adding to the reliability of LED technology. By nature, LED light sources run significantly cooler than traditional lamps, reducing the chance of accidental burns and increased temperatures due to heat emissions. This solid state design of light emitting diodes provides a more reliable, stable, durable, and energy efficient light source over traditional lighting.

At Larson Electronics, we do more than meet your lighting needs. We also provide replacement, retrofit, and upgrade parts as well as industrial grade power accessories. Our craftsmen can custom build any lighting system and/or accessories to fit the unique demands of your operation. A commitment to honesty, quality, and dependability has made Larson Electronics a leader in the lighting and electronics business since 1973. Contact us today at 800-369-6671 or message sales@larsonelectronics.com for more information about our custom options tailored to meet your specific industry needs.

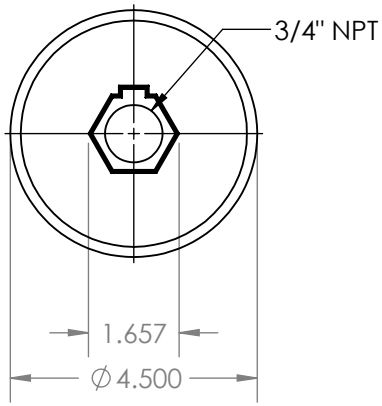

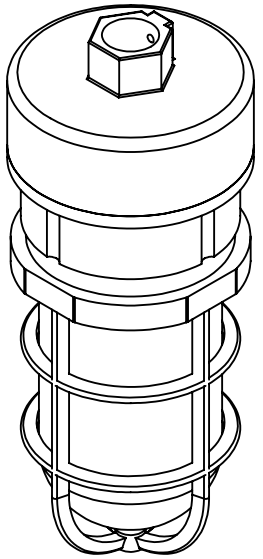

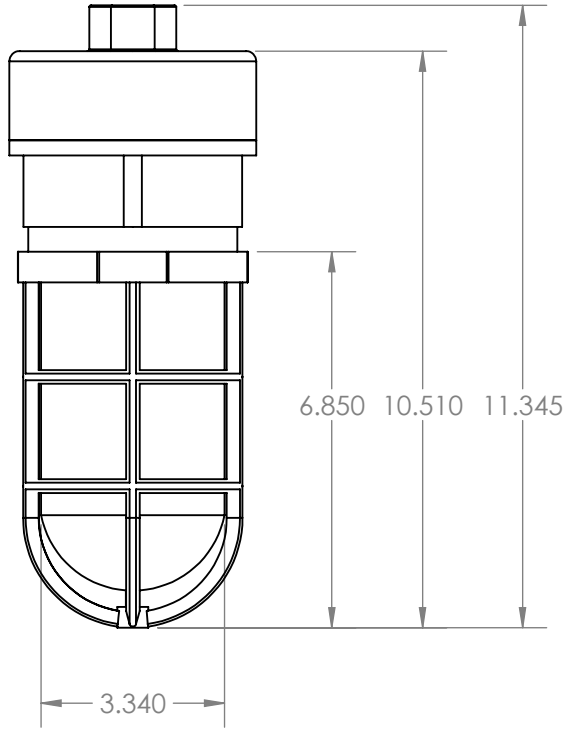

LARSON ELECTRONICS

TITLE:

HAL-CRNM-LED-PND

FINISH			
SURFACE AREA [sq. in]			NAME
DIMENSIONS ARE IN INCHES		DRAWN	CHRISTOPHER THAUER
MATERIAL		CHECKED	N/A
DO NOT SCALE DRAWING		DATE	5/13/2021

SIZE	DWG. NO.	REV
A		

SCALE: NTS | SHEET 1 OF 3

PROPRIETARY AND CONFIDENTIAL
THE INFORMATION CONTAINED IN THIS DRAWING IS THE SOLE PROPERTY OF LARSON ELECTRONICS LLC. ANY REPRODUCTION IN PART OR AS A WHOLE WITHOUT THE WRITTEN PERMISSION OF LARSON ELECTRONICS LLC IS PROHIBITED.

UNLESS OTHERWISE NOTED:

Angle	+/- .5 deg
.X	+/- .02
.XX	+/- .01
.XXX	+/- .005

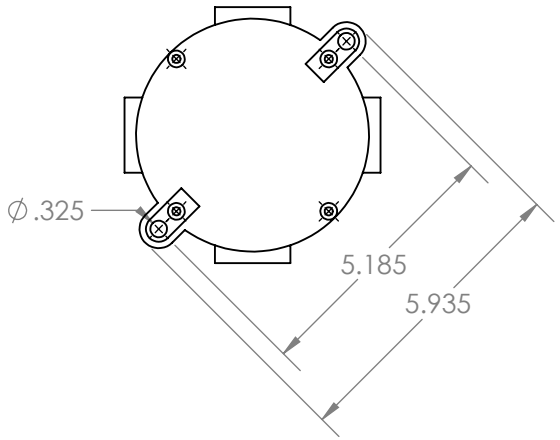

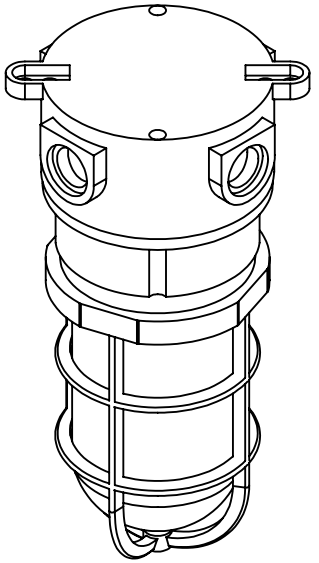

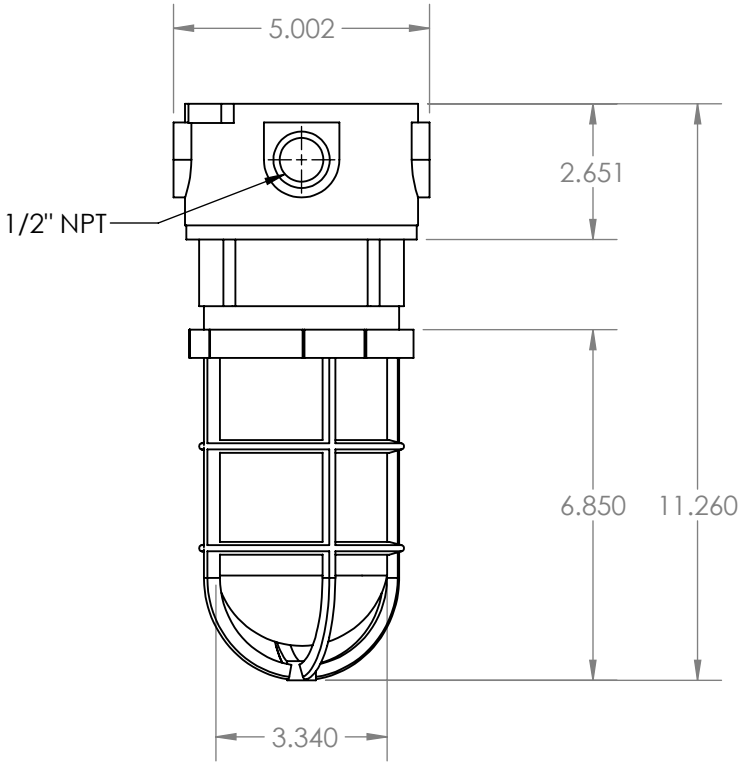

LARSON ELECTRONICS

TITLE:

HAL-CRNM-LED-CM

FINISH			
SURFACE AREA [sq. in]			NAME
DIMENSIONS ARE IN INCHES		DRAWN	CHRISTOPHER THAUER
MATERIAL		CHECKED	N/A
DO NOT SCALE DRAWING		DATE	5/13/2021

SIZE	DWG. NO.	REV
A		

SCALE: NTS | SHEET 2 OF 3

PROPRIETARY AND CONFIDENTIAL
THE INFORMATION CONTAINED IN THIS DRAWING IS THE SOLE PROPERTY OF LARSON ELECTRONICS LLC. ANY REPRODUCTION IN PART OR AS A WHOLE WITHOUT THE WRITTEN PERMISSION OF LARSON ELECTRONICS LLC IS PROHIBITED.

UNLESS OTHERWISE NOTED:

Angle	+/- .5 deg
.X	+/- .02
.XX	+/- .01
.XXX	+/- .005

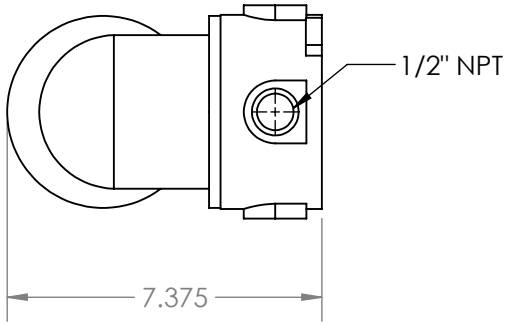

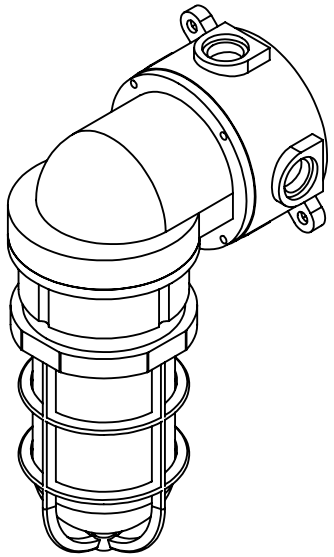

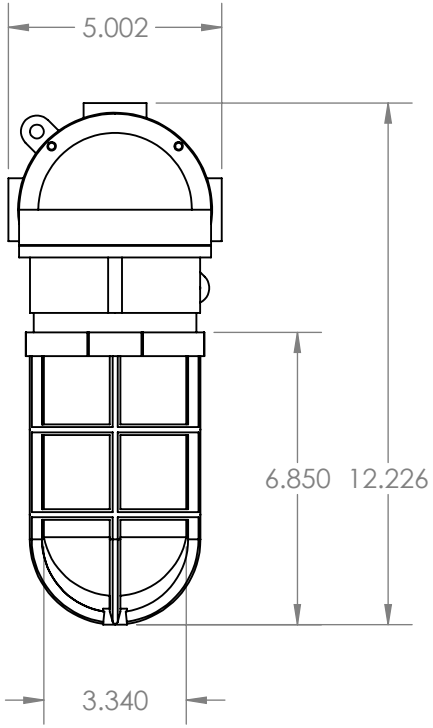

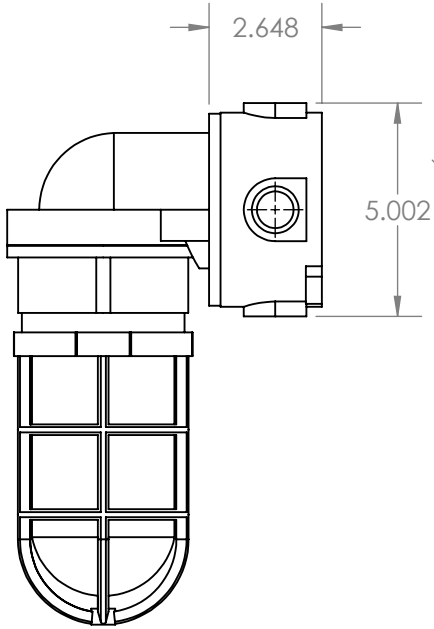

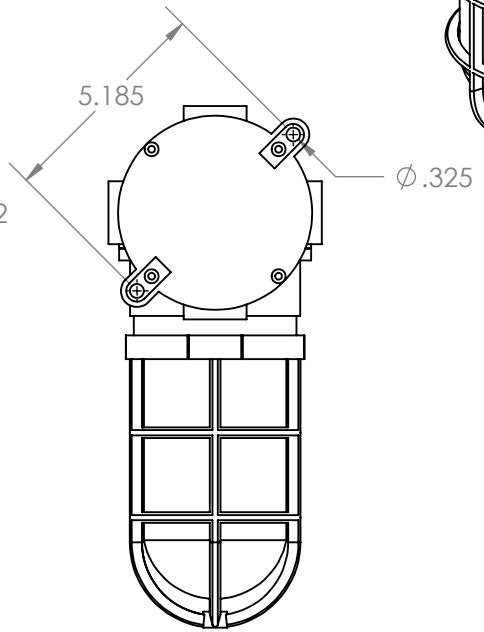

LARSON ELECTRONICS

TITLE:

HAL-CRNM-LED-WM

FINISH			
SURFACE AREA [sq. in]			NAME
DIMENSIONS ARE IN INCHES		DRAWN	CHRISTOPHER THAUER
MATERIAL		CHECKED	N/A
DO NOT SCALE DRAWING		DATE	5/13/2021

SIZE	DWG. NO.	REV
A		

SCALE: NTS | SHEET 3 OF 3

PROPRIETARY AND CONFIDENTIAL
THE INFORMATION CONTAINED IN THIS DRAWING IS THE SOLE PROPERTY OF LARSON ELECTRONICS LLC. ANY REPRODUCTION IN PART OR AS A WHOLE WITHOUT THE WRITTEN PERMISSION OF LARSON ELECTRONICS LLC IS PROHIBITED.

UNLESS OTHERWISE NOTED:

Angle	+/- .5 deg
.X	+/- .02
.XX	+/- .01
.XXX	+/- .005

Larson Electronics LLC
9419 E US HWY 175, Kemp, TX 75143
Phone: 800.369.6671

www.LarsonElectronics.com
Email: sales@LarsonElectronics.com
Fax: 903.765.7664



Larson Electronics LLC
9419 E US HWY 175, Kemp, TX 75143
Phone: 800.369.6671

www.LarsonElectronics.com
Email: sales@LarsonElectronics.com
Fax: 903.765.7664



Larson Electronics LLC
9419 E US HWY 175, Kemp, TX 75143
Phone: 800.369.6671

www.LarsonElectronics.com
Email: sales@LarsonElectronics.com
Fax: 903.765.7664



Larson Electronics LLC
9419 E US HWY 175, Kemp, TX 75143
Phone: 800.369.6671

www.LarsonElectronics.com
Email: sales@LarsonElectronics.com
Fax: 903.765.7664



Certification

Manufacturer: Larson Electronics LLC
Address: 9419 US-HWY 175
Kemp, Texas 75143

Declare the following equipment conforms to the standard(s) as listed:

Model: HAL-CRNM Series
Description: Hazardous Location Light

Evaluated Listings:

CSA: 011713_C_000– NEC / United States standards
CSA: 011713_C_000– CEC / Canada standards

The HAL-CRNM series is certified to NEC and CEC standards for hazardous locations for:

- NEC: Class 1, Division 2, Groups A, B, C and D; Class II, Division 2, Groups F and G; Class III
- NEC: Class I, Zones 1 & 2, Groups IIB + H2, IIA
- CEC: Class 1, Division 2, Groups A, B, C and D; Class II, Division 2, Groups F and G; Class III
- CEC: Class I, Zones 1 & 2, Groups IIB + H2, IIA
- ATEX: Ex II 2 G D, -60°C ≤ Ta ≤ +70°C
- IEC EX: Ex db IIC “T4...T3” Gb, Ex e IIC “T4...T3” Gb, Ex tb IIIC “T110°C...T140°C” Db IP66, -60°C ≤ Ta ≤ +70°C

The HAL-CRNM is comprised of a Killark NV21 series enclosure. This enclosure contains a light assembly consisting of an LED lamp, incandescent lamp, or compact fluorescent lamp. The final assembly may include custom mounting of the lights, and an aluminum mounting bracket for the enclosure. Emergency models (sku contains “EMG”) contain a UL 924 certified emergency light assembly and power supply. This assembly is built to NEC and CEC standards for hazardous locations.

Signed for and on behalf of: Larson Electronics, LLC
Place of issue: Kemp, TX

Signature: James Thomas

Name: James Thomas
Position: Operations Manager

LARSON ELECTRONICS LLC • 9419 E US HWY 175 • KEMP, TX 75143
p: 1-800-369-6671 • intl: 903-498-3363 • f: 903-498-3364 • sales@larsonelectronics.com

Certification Record

Contact Us | Export (https://www.csagroup.org/)

Back to Product List (https://www.csagroup.org/testing-certification/product-listing)

CUSTOMER	CLASS	FILE NUMBER
Killark, Div of Hubbell Inc. (Delaware) 2112 Fenton Logistics Park Blvd, Fenton Missouri United States 63026	3476-83 / <class="tclasse3429-83"> FIXTURES AND FITTINGS-For Hazardous Locations-Certified to U.S. Standards	011713_C_000

Class I, Division 2, Groups A, B, C and D (Temperature Coded); Class II, Groups E, F and G; Class I, Zone 2, AEx nR, IIC: (T4 or T3).

- KILLARK VM Low Series (08 – 250 W): 50, 70, 100, 150 and 250 W HPS; 100, 175 and 250 W MV; 175 and 250 W MH; 08 to 85W Induction; Model Number VM-XXXXXX, and VM High Series (200 – 400 W): 200, 250 and 400 W HPS; 250 and 400 W MV; 250 and 400 W MH luminaires; rated 600 V max; may be supplied with either Globe, Enclosed Reflector, or Refractor. For use with supply wiring rated 90° C or higher.
- KILLARK VM Low Series (70-250W), Model Number VM-XXXXXX, and VM High Series 250-400W) luminaires; rated 600 V max, 400 W max.; may be supplied with either Globe, Enclosed Reflector or Refractor. For use with supply wiring rated 90°C or higher.

Note: Suffixes denote Lamp Type, Cover Type, Conduit Size, Lamp Wattage, Input Voltage and Optics.

	Watts	Type	Code	Ambient
VM Low Series	70	HPS	(T4A)	40
	8-85	QL	(T3C)	40
	8-85	QL	(T3C)	40
	100	MV	(T3C)	40
	100	HPS	(T4A)	40
	150-55	HPS	(T3C)	40
	175	MH	(T3B)	40
	175	MV	(T3)	40
	250	MV	T1	40
	250	HPS	T2	40
VM High Series	250	HPS	(T3C)	40
	250	MV	(T3)	40
	250	MH	(T3A)	40
	400	HPS	(T3C)	40
	400	MH	(T3)	40
	400	MV	(T3)	0

Class I, Division 2, Groups A, B, C and D; Type 4X: Class I, Zone 2, Groups IIA, IIB, IIC; Type 4X:

- KWP Series (Killark) / PGM2 Series (Hubbell), for 1-70W, -100W, -150W, -175W, HPS, MH or MHP lamp, 480V max, 60 Hz. May be provided with suffixes PGPS (Clear Shield), PGWG (Wire Guard), PVLV (Glare Shield cut off visor). Suitable for wet locations. For 1 in 1 cut through wire.

Temperature Codes:

Watts	Type	Ambient	Temp Code
35	HPS	40 C	T3
50	HPS	40 C	T2D
70	HPS	40 C	T2D
100	HPS	40 C	T2D
150	HPS	40 C	T2B
70	MH	40 C	T3
100	MH	40 C	T3
175	MH	40 C	T2B
150	MHP	40 C	T2B
175	MHP	40 C	T2B

Class I, Division 2, Groups A, B, C and D Temperature Coded T5, T4A or T4; Type 4X:
KWPL Series, for 1-50W, -70W, -85W, -100W LED, 480v max, 50/60 Hz. May be provided with suffixes PGPS (Clear Shield), PGWG (Wire Guard), PVLV (Glare Shield cut off visor).
LED Temperature Codes:

Watts	Type	Ambient	Temp Code
50	LED	40C	T5
50	LED	55C	T4A
70	LED	40C	T4A
70	LED	55C	T4
85	LED	40C	T4A
85	LED	55C	T4
100	LED	40C	T4

Note: Suffix may be added to the Catalogue number [Series KWP/KWPL] denoting mechanical variations not effecting certification.
Class I, Groups C and D; Class II, Groups E, F and G; Class III; (Temperature Coded): CSA Encl 3, 4, 4X:
Class I, Division 2, Groups B, C and D; Class II, Division 2, Groups E, F and G; Class III; CSA Encl 3, 4, 4X:

- Series EZ luminaires, mercury vapour (MV), metal halide (MH) or high pressure sodium (HPS); lamp wattage 400 W max; 60 Hz, 600 V max.

Note: Suffixes letters/numerals denote Lamp Type, Lamp Ratings, Voltage, Mounting and Options.
Temperature coded as follows:

Cat No	Lamp W	Type+	Rated Ambient C	Class I Div. 1 Groups	Suitable For Simultaneous Use In Class II, Groups Groups C, D and Class
*EZS50	50	HPS	40	C,D 120(T4A)	E,F,G 160 (T3C)
EZS50	50	HPS	55	C,D 120(T4A)	E,F,G 160 (T3C)
EZS50	50	HPS	65	C,D 120(T4A)	E,F,G 165 (T3B)
*EZS07	70	HPS	40	C,D 120(T4A)	E,F,G 160 (T3C)
EZS07	70	HPS	55	C,D 120(T4A)	E,F,G 160 (T3C)
EZS07	70	HPS	65	C,D 120(T4A)	E,F,G 165 (T3B)
*EZS10	100	HPS	40	C,D 120(T4A)	E,F,G 160 (T3C)
EZS10	100	HPS	55	C,D 120(T4A)	E,F,G 160 (T3C)
EZS10	100	HPS	65	C,D 120(T4A)	E,F,G 165 (T3B)
EZS15	150	HPS	40	C,D 120(T4A)	E,F,G 160 (T3C)
EZS15	150	HPS	55	C,D 120(T4A)	E,F,G 160 (T3C)
EZS15	150	HPS	60	C,D 135(T4)	E,F,G 165 (T3B)
EZS20	200	HPS	40	C,D 160(T3C)	E,F 200 (T3)
EZS20	200	HPS	55	C,D 160(T3C)	-
EZS25	250	HPS	40	C,D 160(T3C)	E,F 200 (T3)
EZS25	250	HPS	55	C,D 160(T3C)	-
EZS40	400	HPS	40	C,D 160(T3C)	-
*EZM10	100	MV	40	C,D 135(T4)	E,F,G 160 (T3C)
EZM10	100	MV	55	C,D 135(T4)	E,F,G 160 (T3C)
EZM17	175	MV	40	C,D 135(T4)	E,F,G 160 (T3C)
EZM17	175	MV	55	C,D 135(T4)	E,F,G 160 (T3C)
EZM25	250	MV	40	C,D 160(T3C)	-
EZM40	400	MV	40	C,D 180(T3A)	-
*EZ-107	70	MH	40	C,D 120(T4A)	E,F,G 120 (T4A)
EZ-107	70	MH	55	C,D 120(T4A)	E,F,G 135 (T4)
EZH07	70	MH	60	C,D 120(T4A)	E,F,G 160 (T3C)

				C,D 120(T4A)	E,F,G 120 (T4A)
EZH10	100	MH	55	C,D 120(T4A)	E,F,G 135 (T4)
EZH10	100	MH	65	C,D 120(T4A)	E,F,G 160 (T3C)
EZH17	175	MH	40	C,D 135(T4)	E,F,G 160 (T3C)
EZH17	175	MH	55	C,D 135(T4)	E,F,G 160 (T3C)
EZH25	250	MH	40	C,D 160(T3C)	-
EZH25	250	MH	55	C,D 160(T3C)	-
EZH40	400	MH	40	C,D 180(T3A)	-

EZL040	40	LED	40	C, D 73 (T6)	E, F, G 160 (T3C)
EZL050	50	LED	40	C, D 73 (T6)	E, F, G 160 (T3C)
EZL055	55	LED	40	C, D 73 (T6)	E, F, G 160 (T3C)
EZL065	65	LED	40	C, D 73 (T6)	E, F, G 160 (T3C)
EZL070	70	LED	40	C, D 73 (T6)	E, F, G 160 (T3C)
EZL080	80	LED	40	C, D 73 (T6)	E, F, G 160 (T3C)
EZL090	90	LED	40	C, D 73 (T6)	E, F, G 160 (T3C)
EZL095	95	LED	40	C, D 73 (T6)	E, F, G 160 (T3C)
EZL100	100	LED	40	C, D 73 (T6)	E, F, G 160 (T3C
EZL125	125	LED	40	C, D 73 (T6)	E, F, G 160 (T3C)
EZL135	135	LED	40	C, D 88 (T5)	E, F, G 160 (T3C)
EZL150	150	LED	40	C, D 88 (T5)	E, F, G 160 (T3C)
EZL190	190	LED	40	C, D 88 (T5)	E, F, G 160 (T3C)
EZL040	40	LED	55	C, D 81 (T6)	E, F, G 160 (T3C)
EZL050	50	LED	55	C, D 81 (T6)	E, F, G 160 (T3C)
EZL055	55	LED	55	C, D 81(T6)	E, F, G 160 (T3C)
EZL065	65	LED	55	C, D 81 (T6)	E, F, G 160 (T3C)
EZL070	70	LED	55	C, D 81 (T6)	E, F, G 160 (T3C)
EZL080	80	LED	55	C, D 81(T6)	E, F, G 160 (T3C)
EZL090	90	LED	55	C, D 81 (T6)	E, F, G 160 (T3C)
EZL095	95	LED	55	C, D 81 (T6)	E, F, G 160 (T3C)
EZL100	100	LED	55	C, D 81 (T6)	E, F, G 160 (T3C)
EZL125	125	LED	55	C, D 81 (T6)	E, F, G 160 (T3C)
EZL040	40	LED	65	C, D 91 (T5)	E, F, G 160 (T3C)
EZL050	50	LED	65	C, D 91 (T5)	E, F, G 160 (T3C)
EZL055	55	LED	65	C, D 91 (T5)	E, F, G 160 (T3C)
EZL065	65	LED	65	C, D 91 (T5)	E, F, G 160 (T3C)
EZL070	70	LED	65	C, D 91 (T5)	E, F, G 160 (T3C)
EZL080	80	LED	65	C, D 91 (T5)	E, F, G 160 (T3C)
EZL090	90	LED	65	C, D 91 (T5)	E, F, G 160 (T3C)
EZL095	95	LED	65	C, D 91 (T5)	E, F, G 160 (T3C)
EZL100	100	LED	65	C, D 91 (T5)	E, F, G 160 (T3C)
EZL125	125	LED	65	C, D 91 (T5)	E, F, G 160 (T3C)
EZL040	40	LED	40	C, D 73 (T6)	E, F, G 160 (T3C)
EZL050	50	LED	40	C, D 73 (T6)	E, F, G 160 (T3C)
EZL055	55	LED	40	C, D 73 (T6)	E, F, G 160 (T3C)
EZL065	65	LED	40	C, D 73 (T6)	E, F, G 160 (T3C)
EZL070	70	LED	40	C, D 73 (T6)	E, F, G 160 (T3C)
EZL080	80	LED	40	C, D 73 (T6)	E, F, G 160 (T3C)
EZL090	90	LED	40	C, D 73 (T6)	E, F, G 160 (T3C)
EZL095	95	LED	40	C, D 73 (T6)	E, F, G 160 (T3C)
EZL100	100	LED	40	C, D 73 (T6)	E, F, G 160 (T3C)
EZL125	125	LED	40	C, D 73 (T6)	E, F, G 160 (T3C)
EZL135	135	LED	40	C, D 88 (T5)	E, F, G 160 (T3C)
EZL150	150	LED	40	C, D 88 (T5)	E, F, G 160 (T3C)
EZL190	190	LED	40	C, D 88 (T5)	E, F, G 160 (T3C)
EZL040	40	LED	55	C, D 81 (T6)	E, F, G 160 (T3C)
EZL050	50	LED	55	C, D 81 (T6)	E, F, G 160 (T3C)

Notes:
1. *Fixtures are suitable for locations having deposits of readily combustible paint residues.
2. Temperature coded for Series EZ fixture all mounts except trunnion
3. LED 135W, 150W & 190 W ratings are only for use in ambient not exceeding 40C

	Type			Class I
Cat No	W	Type	Ambient	Div. 1 Groups
EZS50T	50	HPS	40	C, D, 135 (T4)
EZS50T	50	HPS	55	C, D, 160 (T3C
EZS07T	70	HPS	40	C, D, 135 (T4)
EZS07T	70	HPS	55	C, D, 160 (T3C
EZS10T	100	HPS	40	C, D, 135 (T4)
EZS10T	100	HPS	55	C, D, 160 (T3C
EZS15T	150	HPS	40	C, D, 135 (T4)
EZS15T	150	HPS	55	C, D, 160 (T3C
EZS20T	200	HPS	40	C, D, 160 (T3C
EZS25T	250	HPS	40	C, D, 160 (T3C
EZS40T	400	HPS	40	C, D, 200 (T3)
EZM10T	100	MV	40	C, D, 165 (T3B
EZM10T	100	MV	55	C, D, 180 (T3A
EZM17T	175	MV	40	C, D, 165 (T3B
EZM17T	175	MV	55	C, D, 180 (T3A
EZM25T	250	MV	40	C, D, 180 (T3A
EZM40T	400	MV	40	C, D, 215 (T2D
EZH07T	70	MH	40	C, D, 135 (T4)
EZH07T	70	MH	55	C, D, 135 (T4)
EZH07T	70	MH	65	C, D, 135 (T4)
EZH10T	100	MH	40	C, D, 135 (T4)
EZH10T	100	MH	55	C, D, 135 (T4)
EZH10T	100	MH	65	C, D, 135 (T4)
EZH17T	175	MH	40	C, D, 165 (T3B
EZH17T	175	MH	55	C, D, 180 (T3A
EZH25T	250	MH	40	C, D, 180 (T3A
EZH40T	400	MH	40	C, D, 215 (T2D

- Operating Temperature, C (Operating Temperature Code) For Series EZ Fixtures with auxiliary quartz lamp option all mounts except trunnion.

	Lamp		Ambient	Class I,	Suitable For Simultaneous Use In Class I, Grps. C, D and Class II, Groups
Cat No	W	Type+	C	Divi, Grps.	
EZS05	50	HPS	40	C,D 135(T4)	E,F,G 160 (T3B)
EZS07	70	HPS	40	C,D 135(T4)	E,F,G 160 (T3B)
EZS10	100	HPS	40	C,D 135(T4)	E,F,G 160 (T3B)
EZS15	150	HPS	40	C,D 135(T4)	E,F,G 160 (T3B)
EZS20	200	HPS	40	C,D 160(T3C)	E,F 200 (T3)
EZS25	250	HPS	40	C,D 160(T3C)	E,F 200 (T3)
EZM10	100	MV	40	C,D 160(T3C)	E,F 160 (T3A)
EZM17	175	MV	40	C,D 160(T3C)	E,F 160 (T3A)
EZM25	250	MV	40	C,D 160(T3C)	-
EZH17	175	MH	40	C,D 160(T3C)	E,F 160 (T3A)
EZH25	250	MH	40	C,D 160(T3C)	-
EZS40	400	HPS	40	C,D 160(T3C)	-
EZM40	400	MV	40	C,D 180(T3Z)	-
EZH40	400	MH	40	C,D 180(T3A)	-

ing heads, Temperature Code T1, End Type 4, rated 240 Vac, 20 W max
C @ 150°C ambient.

Notes:
1. Series Cat No "V" is followed with alphanumeric suffixes denoting electrical and mechanical variations.
2. Units with Temp Code "T1" or maximum operating temperature over 305°C are not suitable for Class I, Division 2, Group A applications.
3. Instruction sheets are supplied with each unit.

Class I, Div 2, Groups A, B, C and D; Class II, Groups E, F and G; Class III; Type 3, 4 and 5; Ex nR IIC;
Class I, Zone 2, Aex nR IIC.

- MB series luminaires, 480V max, 60Hz, for mercury vapour, high pressure sodium and metal halide component packaged and temperature coded as follows:

MB HAZARDOUS LOCATION DATA

LAMP		RATED AMBIENT °C	CLASS I, DIV. 2, GROUPS A, B, C, D LAMP TEMPERATURES			CLASS II, DIV. 1 & 2, GROUPS E, F, G MAXIMUM SURFACE TEMPERATURES			CLASS III DIV. 1 & 2			SUPPLY WIRE SUITABLE FOR °C
TYPE	WATT		NO REFLEC	WITH REFLEC	WITH REFRAC	NO REFLEC	WITH REFLEC	WITH REFRAC	NO REFLEC	WITH REFLEC	WITH REFRAC	
	50	40	215°C (T2D)	215°C (T2D)	215°C (T2D)	120°C (T4A)	135°C (T4)	120°C (T4A)	YES	YES	YES	75
	50	55	230°C (T2C)	230°C (T2C)	230°C (T2C)	135°C (T4)	150°C (T3C)	135°C (T4)	YES	YES	YES	90
	50	65	230°C (T2C)	230°C (T2C)	230°C (T2C)	150°C (T3C)	150°C (T3C)	150°C (T3C)	YES	YES	YES	90
HPS	70	40	260°C (T2B)	260°C (T2B)	230°C (T2C)	120°C (T4A)	120°C (T4A)	120°C (T4A)	YES	YES	YES	75
	100	40	280°C (T2A)	280°C (T2A)	260°C (T2A)	150°C (T3C)	150°C (T3C)	150°C (T3C)	YES	YES	YES	90
	150	40	325°C (T1)	325°C (T1)	325°C (T1)	-	-	150°C (T3C)	NO	NO	YES	110
	150	40	325°C (T1)	325°C (T1)	325°C (T1)	180°C (T3A)	200°C (T3)	-	NO	NO	NO	110
	50	40	230°C (T2C)	230°C (T2C)	230°C (T2C)	150°C (T3C)	150°C (T3C)	150°C (T3C)	YES	YES	YES	90
MH	70	40	230°C (T2C)	230°C (T2C)	230°C (T2C)	150°C (T3C)	150°C (T3C)	150°C (T3C)	YES	YES	YES	90
	100	40	280°C (T2A)	280°C (T2A)	260°C (T2A)	150°C (T3C)	150°C (T3C)	150°C (T3C)	YES	YES	YES	85
	50	40	260°C (T2B)	260°C (T2B)	260°C (T2B)	150°C (T3C)	150°C (T3C)	150°C (T3C)	YES	YES	YES	90
MV	50	55	260°C (T2B)	260°C (T2B)	260°C (T2B)	150°C (T3C)	150°C (T3C)	150°C (T3C)	YES	YES	YES	90
	75	40	325°C (T1)	325°C (T1)	325°C (T1)	150°C (T3C)	150°C (T3C)	150°C (T3C)	YES	YES	YES	90
	100	40	450°C (T1)	450°C (T1)	450°C (T1)	150°C (T3C)	150°C (T3C)	150°C (T3C)	YES	YES	YES	110
QL	55	40	160°C (T3C)	160°C (T3C)	160°C (T3C)	135°C (T4)	135°C (T4)	135°C (T4)	YES	YES	YES	75

MB NR Ex nR RESTRICTED BREATHING DATA - CLASS I, ZONE 2, IIC, IIB, IIA

LAMP WITH GLOBE			RATED AMBIENT °C	GLOBE OR GLOBE WITH REFLECTOR UL/CSA	SUPPLY WIRE SUITABLE FOR °C
SERIES	TYPE	WATT		UL/CSA	
			40	T6	75
MBL	HPS	35 OR 50	55	T5	90
			65	T5	90
MBL	HPS	70	40	T5	75
MBL	HPS	100	40	T4	90
MBL	HPS	150	40	T4	110
MBH	MH	50	40	T5	90
MBH	MH	70	40	T5	90
MBH	MH	100	40	T4	90
MBK	MV	50	40	T5	90
			55	T5	110
MBK	MV	75	40	T4	90
MBK	MV	100	40	T4	110
MBK	QL	55	40	T4	75

Note:
1. Includes both standard dome and angle reflectors.
2. Guard required for Class II, Division 1 and Class III applications.
3. Temperature Code based on luminaire with globe and guard only.
4. 150 watt HPS - Groups E, F only with or without reflector and Groups E, F and G with refractor.

Class I, Div. 2, Groups A, B, C and D; Class II, Div. 1, Groups F and G; Class III; Temperature Coded T3A, T3B, T3C, T4A, T5 or T6;

Class I, Zone 2 AEx nA T3, T4, T5 or T6 (where applicable); Enclosure Type 4X; IP66.

- Fluorescent Fixture for use in hazardous locations, Series LZ2N, followed by 17, 28, 32, 40, 44, 54, 55 or 60, followed by 1, 2, 3 or 4, followed by 01, 04, 08, 15, 30, 33 or DC120, followed by F, FF, TB, Px or QD; Rated 480V AC max, 120 VDC max, 60 W max, 1, 2, 3, or 4 lamps, 24 inches or 48 inches

Temperature Coded as follows:
Table 1: Operating Temperature, °C, Operating Temperature Code

Cat. Series	W	Lamp Type	Lamp Compart-ment Length	Number of Lamps	Class I, Div. 2 Groups A,B,C & D; (Zone 2, Groups IIC, IIB, IIA)	Class II, Div. 1, Groups F and G	Supply Wire Suitable For °C	Rated Ambient °C
LZ2N17 230	17	Fluor Linear Bi Pin, T5	48 in	2	T6	T6	60	40
LZ2N17 330	17	Fluor Linear Bi Pin, T5	48 in	3	T6	T6	60	40
LZ2N2823O	28	Fluor Linear Bi Pin, T5	48 in.	2	T4A	T5	60	40
LZ2N2833O	28	Fluor Linear Bi Pin, T5	48 in.	3	T4A	T5	60	40
LZ2N32230	32	Fluor Linear Bi Pin, T8	48 in.	2	T6 T5	T5 ---	75 90	40 55
LZ2N32315	32	Fluor Linear Bi Pin, T8	48 in.	2	T6 T5	T5 ---	75 90	40 55
LZ2N32330	32	Fluor Linear Bi Pin, T8	48 in.	3	T6 T5	T5 ---	75 90	40 55
LZ2N32315	32	Fluor Linear Bi Pin, T8	48 in.	3	T6 T5	T5 ---	75 90	40 55
LZ2N40130	40	Comp Fluor, Long Twin Tube, 4 Pin	24 in.	1	T5	T5	60	40
LZ2N40115	40	Comp Fluor, Long Twin Tube, 4 Pin	24 in.	1	T5	T5	60	40
LZ2N40230	40	Comp Fluor, Long Twin Tube, 4 Pin	24 in.	2	T5	T5	60	40
LZ2N40230	40	Comp Fluor, Long Twin Tube, 4 Pin	24 in.	2	T5	T5	60	40
LZ2N40215	40	Comp Fluor, Long Twin Tube, 4 Pin	24 in.	2	T5	T5	60	40
LZ2N40430	40	Comp Fluor, Long Twin Tube, 4 Pin	48 in.	4	T4A	T5	60	40
LZ2N40415	40	Comp Fluor, Long Twin Tube, 4 Pin	48 in.	4	T4A	T5	60	40
LZ2N40201	40	Fluor Linear Med Bi Pin, T12	48 in.	2	T4A	T5	60	40
LZ2N40204	40	Fluor Linear Med Bi Pin, T12	48 in.	2	T4A	T5	60	40
LZ2N40208	40	Fluor Linear Med Bi Pin, T12	48 in.	2	T4A	T5	60	40
LZ2N44201	44	Fluor Linear HO, RDC, T12	48 in.	2	T5	T5	60	40
LZ2N44204	44	Fluor Linear HO, RDC, T12	48 in.	2	T5	T5	60	40
LZ2N54230	54	Fluor Linear Bi Pin, T5	48 in.	2	T3C	T6	75	40
LZ2N54330	54	Fluor Linear Bi Pin, T5	48 in.	3	T3A	T6	75	40
LZ2N55130	55	Comp. Fluor. Long Twin Tube, 4 Pin	24 in.	1	T3B	T6	60	40
LZ2N60230	60	Fluor Linear HO, RDC, T12	48 in.	2	T4	T5	75	40

Table 1 A: Temperature Code AEx nA

Cat. Series	W	Lamp Type	Lamp Compart-ment Length	Number of Lamps	Class I, Zone 2, AEx nA/ Ex nA	Rated Ambient °C
LZ2N17 230	17	Fluor Linear Bi Pin, T5	48 in.	2	T6	40
LZ2N17 330	17	Fluor Linear Bi Pin, T5	48 in.	3	T6	40
LZ2N28 230	28	Fluor Linear Bi Pin, T5	48 in.	2	T4	40
LZ2N28 330	28	Fluor Linear Bi Pin, T5	48 in.	3	T4	40
LZ2N32 230	32	Fluor Linear Bi Pin, T8	48 in.	2	T6	40
LZ2N32 215	32	Fluor Linear Bi Pin, T8	48 in.	2	T6	40
LZ2N32 330	32	Fluor Linear Bi Pin, T8	48 in.	3	T6 T6	40 55
LZ2N32 315	32	Fluor Linear Bi Pin, T8	48 in.	3	T6 T6	40 55
LZ2N40 130	40	Comp Fluor, Long Twin Tube, 4 Pin	24 in.	1	T5	40
LZ2N4 0115	40	Comp Fluor, Long Twin Tube, 4 Pin	24 in.	1	T5	40
LZ2N40 230	40	Comp Fluor, Long Twin Tube, 4 Pin	24 in.	2	T5	40
LZ2N40 230	40	Comp Fluor, Long Twin Tube, 4 Pin	24 in.	2	T5	40
LZ2N40 215	40	Comp Fluor, Long Twin Tube, 4 Pin	24 in.	2	T5	40
LZ2N40 430	40	Comp Fluor, Long Twin Tube, 4 Pin	48 in.	4	T4	40
LZ2N40 415	40	Comp Fluor, Long Twin Tube, 4 Pin	48 in.	4	T4	40
LZ2N40 201	40	Fluor Linear Med Bi Pin, T12	48 in.	2	T4	40
LZ2N40 204	40	Fluor Linear Med Bi Pin, T12	48 in.	2	T4	40
LZ2N40 208	40	Fluor Linear Med Bi Pin, T12	48 in.	2	T4	40
LZ2N44 201	44	Fluor Linear HO, RDC, T12	48 in.	2	T5	40
LZ2N44 204	44	Fluor Linear HO, RDC, T12	48 in.	2	T5	40

				2	T4	40
LZIN64330	54	Fluor Linear Bi Pin, T5	48 in.	2	T3	40
LZIN65130	55	Comp Fluor, Long Twin Tube, 4 Pin	24 in.	1	T3	40
LZIN60230	60	Fluor Linear HO, RDC, T12	48 in.	2	T4	40

Note: Supply Wire Temperature is the same as tabulated under Table 1for each corresponding Series catalog number.
- Fluorescent Fixture Series LZINE, followed by 1 or 2; followed by 17, 28, 32, 40, 44, 54, 55 or 60; followed by 1, 2, 3 or 4; followed by 01, 04, 08, 15, 30, 33 or DC120; followed by F1, F4, F5, F8 TBx, Px or Qx; Rated 480 VAC max, 120 VDC max, 60 W max; 1, 2, 3 or 4 lamps, 24 or 48 inches.

Temperature Coded as Follows:

Cat. Series	W	Lamp Type	Lamp Compart-ment Length	Number of Lamps	Class I, Div. 2 Gr A,B,C & D; Zone 2 Gr IIC, IIB, IIA	Class II, Div. 1, Groups F and G	Supply Wire Suitable For ° C
LZINE2F1730	17	Fluor Linear Bi Pin, T5	48 in.	2	T6	T6	60
LZINE2F1730	17	Fluor Linear Bi Pin, T5	48 in.	3	T6	T6	60
LZINE2F2830	28	Fluor Linear Bi Pin, T5	48 in.	2	T4A	T6	60
LZINE2F2830	28	Fluor Linear Bi Pin, T5	48 in.	3	T4A	T6	60
LZINE2-32730	32	Fluor Linear Bi Pin, T8	48 in.	2	T6	T5	75
LZINE2-32330	32	Fluor Linear Bi Pin, T8	48 in.	3	T6	T5	75
LZIN01-40130	40	Comp Fluor, Long Twin Tube, 4 Pin	24 in.	1	T5	T5	60
LZIN01-40230	40	Comp Fluor, Long Twin Tube, 4 Pin	24 in.	2	T5	T5	60
LZIN01-40430	40	Comp Fluor, Long Twin Tube, 4 Pin	48 in.	4	T4A	T5	60
LZINE2-40201	40	Fluor Linear Med Bi Pin, T12	48 in.	2	T4A	T5	60
LZINE2-40204	40	Fluor Linear Med Bi Pin, T12	48 in.	2	T4A	T5	60
LZINE2-40208	40	Fluor Linear Med Bi Pin, T12	48 in.	2	T4A	T5	60
LZIN01-44201	44	Fluor Linear HO, RDC, T12	48 in.	2	T5	T5	60
LZIN01-44204	44	Fluor Linear HO, RDC, T12	48 in.	2	T5	T5	60
LZINE254230	54	Fluor Linear Bi Pin, T5	48 in.	2	T3C	T6	75
LZINE255130	55	Comp Fluor, Long Twin Tube, 4 Pin	24 in.	1	T3B	T6	60
LZIN01-60201	60	Fluor Linear HO, RDC, T12	48 in.	2	T4	T5	75
LZIN01-60204	60	Fluor Linear HO, RDC, T12	48 in.	2	T4	T5	75

Operating Temperature, °C, Operating Temperature Code
Temperature Code AExnA

Cat.Series	W	LampType	Lamp Compart-ment Length	Number of Lamps	Temperature Code
LZINE2F1730	17	Fluor Linear Bi Pin, T5	48 in.	2	T6
LZINE2F1730	17	Fluor Linear Bi Pin, T5	48 in.	3	T6
LZINE2F2830	28	Fluor Linear Bi Pin, T5	48 in.	2	T4
LZINE2F2830	28	Fluor Linear Bi Pin, T5	48 in.	3	T4
LZINE2-32730	32	Fluor Linear Bi Pin, T8	48 in.	2	T6
LZINE2-32330	32	Fluor Linear Bi Pin, T8	48 in.	3	T6
LZIN01-40130	40	Comp Fluor, Long Twin Tube, 4 Pin	24 in.	1	T5
LZIN01-40230	40	Comp Fluor, Long Twin Tube, 4 Pin	24 in.	2	T5
LZIN01-40430	40	Comp Fluor, Long Twin Tube, 4 Pin	48 in.	4	T4
LZINE2-40201	40	Fluor Linear Med Bi Pin, T12	48 in.	2	T4
LZINE2-40204	40	Fluor Linear Med Bi Pin, T12	48 in.	2	T4
LZINE2-40208	40	Fluor Linear Med Bi Pin, T12	48 in.	2	T4
LZIN01-44201	44	Fluor Linear HO, RDC, T12	48 in.	2	T5
LZIN01-44204	44	Fluor Linear HO, RDC, T12	48 in.	2	T5
LZINE254230	54	Fluor Linear Bi Pin, T5	48 in.	2	T4
LZINE255130	55	Comp Fluor, Long Twin Tube, 4 Pin	24 in.	1	T3
LZIN01-60201	60	Fluor Linear HO, RDC, T12	48 in.	2	T4
LZIN01-60204	60	Fluor Linear HO, RDC, T12	48 in.	2	T4

Note: Supply Wire Temperature is the same as tabulated under Table for each corresponding Series catalog number
- Fluorescent Fixture Series LZINE, followed by 1 or 2; followed by 32, 40, 44 or 60; followed by L2,3 or 4; followed by 01, 04, 08, 15 or 30, followed by F1, F4 or F8. Rated 347V ac max, 60W max, 1, 2, 3 or 4 lamps, 24 or 48 inches.

Temperature Coded as follows:
Operating Temperature, °C, Operating Temperature Code

Cat. Series	W	Lamp Type	Lamp Compartment Length	Number of Lamps	Class I, Div. 2 Gr A,B,C & D; Zone 2 Gr IIC, IIB, IIA	Class II, Div. 1, Groups F and G	Supply Wire Suitable For ° C
LZINE2-32330	32	Fluor Linear Bi Pin, T8	48 in.	2	T6	T5	75
LZINE2-32330	32	Fluor Linear Bi Pin, T8	48 in.	3	T6	T5	75
LZIN01-40130	40	Comp Fluor, Long Twin Tube, 4 Pin	24 in.	1	T5	T5	60
LZIN01-40230	40	Comp Fluor, Long Twin Tube, 4 Pin	24 in.	2	T5	T5	60
LZIN01-40430	40	Comp Fluor, Long Twin Tube, 4 Pin	48 in.	4	T4A	T5	60
LZINE2-40201	40	Fluor Linear Med Bi Pin, T12	48 in.	2	T4A	T5	60
LZINE2-40204	40	Fluor Linear Med Bi Pin, T12	48 in.	2	T4A	T5	60
LZINE2-40208	40	Fluor Linear Med Bi Pin, T12	48 in.	2	T4A	T5	60
LZIN01-44201	44	Fluor Linear HO, RDC, T12	48 in.	2	T5	T5	60
LZIN01-44204	44	Fluor Linear HO, RDC, T12	48 in.	2	T5	T5	60
LZIN01-60201	60	Fluor Linear HO, RDC, T12	48 in.	2	T4	T5	75
LZIN01-60204	60	Fluor Linear HO, RDC, T12	48 in.	2	T4	T5	75

Temperature Code AExnA

Cat. Series	W	Lamp Type	Lamp Compartment Length	Number of Lamps	Temperature Code
LZIN17230	17	Fluor Linear Bi Pin, T5	48 in	2	T6
LZIN17230	17	Fluor Linear Bi Pin, T5	48 in	3	T6
LZINE2-32230	32	Fluor Linear Bi Pin, T8	48 in.	2	T6
LZINE2-32330	32	Fluor Linear Bi Pin, T8	48 in.	3	T6
LZIN01-40130	40	Comp Fluor, Long Twin Tube, 4 Pin	24 in.	1	T5
LZIN01-40230	40	Comp Fluor, Long Twin Tube, 4 Pin	24 in	2	T5
LZIN01-40430	40	Comp Fluor, Long Twin Tube, 4 Pin	48 in.	4	T4
LZINE2-40201	40	Fluor Linear Med Bi Pin, T12	48 in.	2	T4
LZINE2-40204	40	Fluor Linear Med Bi Pin, T12	48 in.	2	T4
LZINE2-40208	40	Fluor Linear Med Bi Pin, T12	48 in.	2	T4
LZIN01-44201	44	Fluor Linear HO, RDC, T12	48 in.	2	T5
LZIN01-44204	44	Fluor Linear HO, RDC, T12	48 in.	2	T5
LZIN-54230	54	Fluor Linar Bi Pin, T5	48 in	2	T4
LZIN-55130	55	Comp Fluor, Long Twin Tube, 4 Pin	24 in	1	T3
LZIN01-60201	60	Fluor Linear HO, RDC, T12	48 in.	2	T4
LZIN01-60204	60	Fluor Linear HO, RDC, T12	48 in.	2	T4

Note: Supply Wire Terminal is the same as tabulated under Table 1 for each corresponding Series catalogue number.
Class I, Division 2, Groups A, B, C and D; Temperature Coded T1, T2, T2A, T2B, T2C, T2D, T3 or T3A (where applicable);
Class II, Groups E, F and G; Class III
Class I, Zone 2, AEx nA nR II; Temperature Coded T3, T4, T5 or T6 (where applicable);

Ex nR II; Temperature Coded T3, T4, T5 or T6 (where applicable):
- KILLARK VM3 Series, Model Number VM1, followed by H, M, S, P, E or Q; followed by XXXXXX, rated 480V max, 600W max; may be supplied with either Globe, Enclosed Reflector, or Refractor. For use with supply wiring rated 90°C or higher

NOTE:

(1) Suffixes denote Lamp Type, Cover Type, Conduit Size, Lamp Wattage, Input Voltage and Optics.
Class I, Division 2, Groups A, B, C and D; Temperature Code: T2, T2A, T2B, T2C, T2D, T3, T3A, T3B, T3C (or maximum operating temperature);
Class II, Groups E, F and G; Class III; Temperature Code: T3A, T3C, T4, T4A, T5, T6
Class I, Zone 2, AEx nA nR II; Temperature Code : T3, T4, T5 or T6:
- KILLARK VMHand VM2 Series, Model Number VM-XXXXXX, rated 480 V max, 175 W max.; may be supplied with either Globe, Enclosed Reflector, or Refractor. For use with supply wiring rated 60, 75, 90 or 105°C (where applicable).

NOTES:

(1) Suffixes denote Lamp Type, Cover Type, Conduit Size, Lamp Wattage, Input Voltage and Optics.

(2) Maximum Operating Temperatures exceeding 309C are not suitable for use in Class I, Div. 2, Group A (Acetylene) Atmospheres
Class I, Division 2, Groups A, B, C and D; Temperature Code: T2, T2A, T2B, T2C, T2D, T3 or T3A, T3B or T3C;
Class II, Groups E, F and G; Class III: (OUTSIDE TYPE-(SALT WATER)
Class I, Zone 2, AEx nA nR II; IP66, Temperature Code : T3, T4, T5 or T6:
- KILLARK VM3 and VM4 Series, Model Number VM-XXXXXX, rated 480 V max, 250 W max.; may be supplied with either Globe, Enclosed Reflector, or Refractor. For use with supply wiring rated 60° C or higher.

NOTES:
1. Suffixes denote Lamp Type, Cover Type, Conduit Size, Lamp Wattage, Input Voltage and Optics.
2. Model Number is followed by alphanumeric suffixes denoting electrical and mechanical variations.

Class I, Division 2, Groups A, B, C and D; Temperature Coded T2, T2A, T2B, T2C, T2D, T3 or T3A;
Class II, Groups E, F and G; Class III:
Class I, Zone 2, AEx nA nR II; Temperature Coded T3, T4, T5 or T6:
- KILLARK VM3 and VM4 Series, Model Number VM-XXXXXX, rated 480 V max, 250 W max.; may be supplied with either Globe, Enclosed Reflector, or Refractor. For use with supply wiring rated 60° C or higher.

NOTE: Suffixes denote Lamp Type, Cover Type, Conduit Size, Lamp Wattage, Input Voltage and Optics.
Class I, Division 2, Groups A, B, C and D; Class II, Division 2, Groups F and G. Class III, Type 4; Temperature Coded.
- Fluorescent Fixture for use in hazardous locations, Series NV2Y, rated 277 V max. 40W max. Temperature Coded T2D, T2C, T3A T3B or T3C.
- Incandescent Fixture for use in hazardous locations Series NV2Y, rated 300 V max. 100W max. Temperature coded T2, T2A, T2B or T2C

Class I, Division 2, Groups A, B, C and D; Temperature Coded Type 4:
- Incandescent Fixture for use in hazardous locations Series NV2Y, rated 300 V max. 100W max. Temperature coded T2, or T2B.

Note: Alphanumeric suffixes are added to the Catalogue Number to denote electrical and mechanical variations.
Class I, Div. 2, Groups A, B, C and D; Encl. Type 4: Temperature Coded or Maximum Operating Temperatures (260C, 300C, 325C, 350C, 357C, 358C, 378C or 442C):

Class I, Zone 2, Groups IIA, IIB and IIC; Encl. Type 4, IP66; Temperature Coded or Maximum Operating Temperatures (260C, 300C, 325C, 350C, 357C, 358C, 378C or 442C):

PART A

- Outdoor, integral ballast luminaires, KF-Series rated 400 W max, 600 V max, 50/60 Hz. Catalog number KF; followed by S, M, H or P followed by 3, 5, 7, 8, 10, 15, 17, 20, 25, 32, 35 or 40; followed by 0, 4,5,6,7,8,9, 35, or 36; followed by 76 followed by other options for use with HPS, MH, MV or MHP type lamps:

PART B

- Outdoor, integral ballast, vertical mount only Series KF rated 1000 W max, 600 V max, 50/60 Hz. Catalog number KF; followed by S, M, H or P followed by 40 or 100; followed by 0, 4, 5, 6, 7, 8, or 9; followed by 76 followed by other options, 400W max for use with HPS, MH, MV or MHP type lamps and Series KF, rated 600V max, 60Hz, 1000W max for use with HPS or MH type lamps or 400W for use with MV type lamps

PART A & B - Temperature Coded:

Cat. No.	Lamp Type	Wattage(W)	Max. Ambient Temp. (°C)	Max. Operating Temp. (°C)	Class I Div. 2 Groups	Supply Wire Temp. (°C)	Luminaire Aiming Range*
KFS-3X-76X	HPS	35	25	260	A, B, C & D	75	A
KFM-5X-76X	MV	50	25	350	A, B, C & D	90	A
KFS-5X-76X	HPS	50	25	260	A, B, C & D	75	A
KFH-7X-76X	MH	70	25	325	B, C & D	75	A

KFS-7X-76X	HPS	70	55	260	A, B, C & D	75	A
KFS-7X-76X	HPS	70	65	260	A, B, C & D	75	A
KFM-8X-76X	MV	75	25	260	A, B, C & D	90	A
KFM-10X-76X	MV	100	25	350	B, C & D	90	A
KFS-10X-76X	HPS	100	25	260	A, B, C & D	75	A
KFS-10X-76X	HPS	100	40	260	A, B, C & D	75	A
KFS-10X-76X	HPS	100	55	260	A, B, C & D	90	A
KFS-10X-76X	HPS	100	65	260	A, B, C & D	105	A
KFH-10X-76X	MH	100	25	325	B, C & D	90	A
KFS-15X-76X	HPS	150	25	260	A, B, C & D	75	A
KFS-15X-76X	HPS	150	40	260	A, B, C & D	75	A
KFS-15X-76X	HPS	150	55	260	A, B, C & D	90	A
KFS-15X-76X	HPS	150	65	260	A, B, C & D	105	A
KFP-15X-76X	MHP	150	40	325	B, C & D	90	A
KFP-15X-76X	MHP	150	55	325	B, C & D	90	A
KFP-15X-76X	MHP	150	65	325	B, C & D	105	A
KFM-17X-76X	MV	175	25	350	B, C & D	90	A
KFP-17X-76X	MHP	175	40	325	B, C & D	90	A
KFP-17X-76X	MHP	175	55	325	B, C & D	90	A
KFP-17X-76X	MHP	175	65	325	B, C & D	105	A
KFH-17X-76X	MH	175	40	350	B, C & D	90	A
KFH-17X-76X	MH	175	40	300	A, B, C & D	90	C
KFH-17X-76X	MH	175	55	350	B, C & D	105	A
KFH-17X-76X	MH	175	55	300	A, B, C & D	90	C
KFH-17X-76X	MH	175	65	325	B, C & D	105	C
KFP-20X-76X	MHP	200	40	325	B, C & D	90	A
KFP-20X-76X	MHP	200	55	325	B, C & D	90	A
KFP-20X-76X	MHP	200	65	325	B, C & D	105	A
KFS-20X-76X	HPS	200	40	325	B, C & D	90	A
KFS-20X-76X	HPS	200	55	325	B, C & D	105	A
KFS-20X-76X	HPS	200	65	325	B, C & D	105	B
KFH-25X-76X	MH	250	25	325	B, C & D	90	A
KFH-25X-76X	MH	250	40	350	B, C & D	90	A
KFH-25X-76X	MH	250	40	300	A, B, C & D	90	C
KFH-25X-76X	MH	250	55	350	B, C & D	105	A
KFH-25X-76X	MH	250	55	300	A, B, C & D	90	C
KFH-25X-76X	MH	250	65	325	B, C & D	105	C
KFS-25X-76X	HPS	250	25	325	B, C & D	90	A
KFS-25X-76X	HPS	250	40	325	B, C & D	90	A
KFS-25X-76X	HPS	250	55	325	B, C & D	105	A
KFS-25X-76X	HPS	250	65	325	B, C & D	105	B
KFP-25X-76X	MHP	250	40	350	B, C & D	90	A
KFP-25X-76X	MHP	250	55	350	B, C & D	105	A
KFM-25X-76X	MV	250	25	350	B, C & D	90	A
KFP-32X-76X	MHP	320	40	366	B, C & D	90	A
KFP-32X-76X	MHP	320	55	366	B, C & D	105	A
KFP-35X-76X	MHP	350	40	350	B, C & D	90	A
KFP-35X-76X	MHP	350	55	350	B, C & D	110	C
KFS-40X-76X	HPS	400	25	358	B, C & D	90	A
KFS-40X-76X	HPS	400	40	357	B, C & D	90	A
KFS-40X-76X	HPS	400	50	363	B, C & D	105	C
KFS-40X-76X	HPS	400	55	363	B, C & D	110	B
KFP-40X-76X	MHP	400	40	350	B, C & D	90	A
KFP-40X-76X	MHP	400	55	325	B, C & D	110	C
KFH-40X-76X	MH	400	25	375	B, C & D	90	B
KFH-40X-76X	MH	400	40	325	B, C & D	105	B
KFH-40X-76X	MH	400	40	325	B, C & D	90	C
KFH-40X-76X	MH	400	50	301	A, B, C & D	102	D
KFM-40X-76X	MV	400	25	350	B, C & D	105	A
KFH-100X-76X	MH	1000	40	442	B, C & D	110	C
KFS-100X-76X	HPS	1000	25	378	B, C & D	110	C
KFS-100X-76X	HPS	1000	40	392	B, C & D	110	C
KFS-60X-76X	HPS	600	40	418	B,C & D	105	D
KFP-100X-76X	MHP	1000	40	445	B,C, & D	125	C
KFP-87X-76X	MHP	875	40	445	B, C, & D	125	C
KFP-75X-76X	MHP	750	40	445	B, C, & D	125	C

* – A: 0° to 180°; B: 0° to 135°; C: 45° to 135°; D: 45° to 90°

Note: Fixtures marked with a maximum operating temperature greater than 305C, are not suitable for use in Class I, Div. 2, Group A atmospheres.

Class I, Zone 2, AEx nR, IL T*, X, IP66

- Restricted breathing Model KF Series, followed by S, M, H or P followed by 3, 5, 7, 8, 10, 15, 17, 25, 32, 35, 40, 60, 75, 87 or 100; followed by 0, 5, 6, 7, 8, 9, 35, or 36; followed by 76, may be followed by F other options not affecting certification. Temperature codes as shown in Table 1 based on wattage, lamp type and ambient temperature as follows:

Table 1

Wattage(W)	Lamp Type	Max. Ambient Temperature (°C)	Restricted Breathing Temperature Code (Ex nR/AEx nR)	Supply Wire Temperature (°C)		Luminaire Aiming Range*
1000	HPS	40	T2	110	C	
400	HPS	55	T3	110	B	
400	HPS	50	T3	105	C	
400	HPS	40	T3	90	A	
600	HPS	40	T3	105	D	
250	HPS	65	T3	105	B	
250	HPS	55	T3	105	A	
250	HPS	40	T4	90	A	
200	HPS	65	T3	105	B	
200	HPS	55	T3	105	A	
200	HPS	40	T4	90	A	
150	HPS	65	T4	105	A	
150	HPS	55	T4	90	A	
150	HPS	40	T4	75	A	
150	HPS	25	T4	75	A	
100	HPS	65	T4	105	A	
100	HPS	55	T4	90	A	
100	HPS	40	T4	75	A	
70	HPS	65	T4	105	A	
70	HPS	55	T4	90	A	
70	HPS	40	T4	75	A	
1000	MH	40	T2	110	C	
400	MH	50	T3	102	D	
400	MH	40	T3	90	C	
400	MH	40	T3	105	B	
400	MH	25	T4	90	B	
250	MH	65	T4	105	C	
250	MH	55	T4	90	C	
250	MH	55	T3	105	A	
250	MH	40	T5	90	C	
250	MH	40	T4	90	A	
250	MH	25	T4	90	A	
175	MH	65	T4	105	C	
175	MH	55	T4	90	C	
175	MH	55	T3	105	A	
175	MH	40	T5	90	C	
175	MH	40	T4	90	A	
175	MH	25	T4	90	A	
400	MV	25	T3	90	A	
250	MV	25	T3	90	A	
175	MV	25	T3	90	A	
1000	MHP	40	T2	125	C	
875	MHP	40	T2	125	C	
750	MHP	40	T2	125	C	
400	MHP	55	T3	110	C	
400	MHP	40	T3	90	A	
350	MHP	55	T3	110	C	
350	MHP	40	T3	90	A	

Contact us | Export | Privacy | Accessibility | Careers

				105	A
				90	A
250	MHP	55	T3	105	A
250	MHP	40	T3	90	A
200	MHP	65	T3	105	A
200	MHP	55	T3	90	A
200	MHP	40	T4	90	A
175	MHP	65	T3	105	A
175	MHP	55	T3	90	A
175	MHP	40	T4	90	A
150	MHP	65	T3	105	A
150	MHP	55	T3	90	A
150	MHP	40	T4	90	A

* – A: 0° to 180°; B: 0° to 135°; C: 45° to 135°; D: 45° to 90°

Class I, Zone 2: AEx nR II, T4, X; Enclosure Type 4, IP66:
- Restricted Breathing Model KFS-40X-78X NR, hard mounted integral ballast, capacitor and starter door mounted, vertical lamp, rated 600 V max., 60 Hz, 400W HPS max , Maximum Ambient 55 C. Temperature Code T4.

Class I, Zone 2, AEx nR, II, T*, X; LP66
- KFS, KFH and KFP ManGard Luminaires, followed by 10, 15, 17, 25, 32, 35 or 40; followed by 0, 5, 6, 7, 8 or 9; followed by SS; may be followed by nR; may be followed by P1 to P8, may be followed by P1 to P3.

Class I, Division 2, Groups A, B, C and D, Temperature Coded: T2B, T2D, T3, T3A or T3C; Class II, Groups E, F, G; Class III; Enclosure Types 3 and/or 4 (where applicable); Class I, Zone 2, AEx nR, T4, T3 or T6; IP66
- Emergency back-up Lighting Fixtures, Series VE4Q, rated 347VAC, 60Hz ; 120/277 VAC, 50/60 Hz, 84 W max, CF lamp(s).
- Emergency back-up Lighting Fixtures, Series VE3Q, rated 347VAC, 60 Hz;120/277 VAC, 50/60 Hz, 84 W max, CF lamp(s).

Class II, Groups E, F, G; Class III; Enclosure Types 3 and/or 4 (where applicable): IP66
- Emergency back-up Lighting Fixtures, Series DE3Q, rated 347VAC, 60 Hz; 120/277 VAC, 60 Hz, 26 W max, CF lamp(s).
- Emergency back up Lighting Fixtures, Series DE4Q, rated 347 VAC, 60 Hz ; 120/277 VAC, 60 Hz, 26 W max, CF lamp(s).

Ballast Tank Assembly
Series VE3Q, DE3Q or VE4Q, DE4Q followed by 0013, 18, 26, 32, 42, 26, 36, 52, 64 or 84; followed by 13, 18, 26, 32, 42, 26, 36, 52, 64 or 84; followed by E15 or E30.

Optics

VE3Q or DE3Q: VMG17, VMR17I, VMR17S, VZRG1550, VZRG2550, VZRG2520, VZRP17S

VE4Q or DE4Q: VMG25, VMR25I, VMR25S, VMR255, VMER40, VMEP40, VZRG4020, VZRG4050, VZRP17SB

External Guards

VE4Q or DE4Q: VMAG25S, VMERG, VMRWG

VE3Q or DE3Q: VMAG17, VMRWG8, VMRWG

External Reflectors

VE3Q, VE4Q, DE3Q or DE4Q : VMPSD40, VMP40, HRD400, HR340SALZ

Mounting Splice Boxes

VE3Q, VE4Q, DE3Q or DE4Q : VMA28, VMA38, VMF28, VMF38, VMX28, VMX38, VMX68, VMX78, VMA88, VMX88, VMB88, VMB38, VMC28, VMC38, VMD48, VMD58, VMS48, VMS58

Options

VE3Q, VE4Q: RD, NR, F, FF, TB, P1, P2, QD

DE3Q or DE4Q: RD, NR, F, FF, TB, QD
Class I, Div. 2, Groups A, B, C and D; Class II, Div. 1, Groups E, F and G; Class III; Temperature Coded T3C, T3B, T4A, or T6:
Class I, Zone 2 AEx nA T3, T4 or T6; Enclosure Type 4X; IP66.
- Fluorescent Fixture for use in hazardous locations, Series LZ2S, followed by 17, 28, 32, 40, 44, 54, 55 or 60; followed by 1, 2, 3 or 4; followed by 01, 04, 08, 15, 30, 35, DC012, DC024 or DC120; followed by F1, F4, F5 or F8. Rated 480 V AC max, 60 W max, 1, 2, 3, or 4 lamps, 24 inches or 48 inches

Operating Temperature, °C, Operating Temperature Code

Cat. Series	W	Lamp Type	Lamp Compartment Length	Number of Lamps	Class I, Div. 2 Groups A,B,C & D;Zone 2, Groups IIC, IIB, IIA)	Class II, Div. 1, Groups F and G	**Supply Wire Suitable For °C**	Ambient °C
LZ2S40130	40	Comp Fluor, Long Twin Tube, 4 Pin	2 ft.	1	T3C	T6	75	40
LZ2S55130	55	Comp Fluor, Long Twin Tube, 4 Pin	2 ft.	1	T3B	T6	60	40
LZ2S40230	40	Comp Fluor, Long Twin Tube, 4 Pin	2 ft.	2	T3C	T6	75	40
LZ2S40430	40	Comp Fluor, Long Twin Tube, 4 Pin	4 ft.	4	T3C	T6	75	40
LZ2S17230	17	Fluor Linear Bi Pin, T5	4 ft.	2	T6	T6	60	40
LZ2S17330	17	Fluor Linear Bi Pin, T5	4 ft.	3	T6	T6	60	40
LZ2S28230	28	Fluor Linear Bi Pin, T5	4 ft.	2	T4A	T6	60	40
LZ2S28330	28	Fluor Linear Bi Pin, T5	4 ft.	3	T4A	T6	60	40
LZ2S32230	32	Fluor Linear Bi Pin, T8	4 ft.	2	T6	T6	60	40
					T6	XX	75	65
LZ2S32215	32	Fluor Linear Bi Pin, T8	4 ft.	2	T6	T6	60	40
					T5	XX	75	55
LZ2S32330	32	Fluor Linear Bi Pin, T8	4 ft.	3	T6	T6	60	40
LZ2S32315	32	Fluor Linear Bi Pin, T8	4 ft.	3	T6	T6	60	40
LZ2S40201	40	Fluor Linear Bi Pin, T12	4 ft.	2	T4A	T6	60	40
LZ2S40204	40	Fluor Linear Bi Pin, T12	4 ft.	2	T4A	T6	60	40
LZ2S40208	40	Fluor Linear Bi Pin, T12	4 ft.	2	T4A	T6	60	40
LZ2S44230	44	Fluor Linear HO, RDC, T8	4 ft.	2	T4A	T6	60	40
LZ2S54330	54	Fluor Linear Bi Pin, T5	4 ft.	3	T3B	XX	75	30
LZ2S54130	54	Fluor Linear Bi Pin, T5	4 ft.	2	T3C	T6	75	40
LZ2S60230	60	Fluor Linear HO, RDC, T12	4 ft.	2	T4	T6	75	40

Temperature Code Class I, Zone 2, AEx nA
<[If.hasunMassignedColumns]><[endif]>

Cat. Series	W	Lamp Type	Lamp Compart-ment Length	Number of Lamps	Class I, Zone 2, AEx nA
LZ2S40130	40	Comp Fluor, Long Twin Tube, 4 Pin	2 ft.	1	T3
LZ2S55130	55	Comp Fluor, Long Twin Tube, 4 Pin	2 ft.	1	T3
LZ2S40230	40	Comp Fluor, Long Twin Tube, 4 Pin	2 ft.	2	T3
LZ2S40430	40	Comp Fluor, Long Twin Tube, 4 Pin	4 ft.	4	T3
LZ2S17230	17	Fluor Linear Bi Pin, T5	4 ft.	2	T6
LZ2S17330	17	Fluor Linear Bi Pin, T5	4 ft.	3	T6
LZ2S28230	28	Fluor Linear Bi Pin, T5	4 ft.	2	T4
LZ2S28330	28	Fluor Linear Bi Pin, T5	4 ft.	3	T4
LZ2S32230	32	Fluor Linear Bi Pin, T8	4 ft.	2	T6
LZ2S32215	32	Fluor Linear Bi Pin, T8	4 ft.	2	T6
LZ2S32330	32	Fluor Linear Bi Pin, T8	4 ft.	3	T6
LZ2S32315	32	Fluor Linear Bi Pin, T8	4 ft.	3	T6
LZ2S40201	40	Fluor Linear Bi Pin, T12	4 ft.	2	T4
LZ2S40204	40	Fluor Linear Bi Pin, T12	4 ft.	2	T4
LZ2S40208	40	Fluor Linear Bi Pin, T12	4 ft.	2	T4
LZ2S44230	44	Fluor Linear HO, RDC, T8	4 ft.	2	T4
LZ2S54230	54	Fluor Linear Bi Pin, T5	4 ft.	2	T4
LZ2S60201	60	Fluor Linear HO, RDC, T12	4 ft.	2	T4
LZ2S60204	60	Fluor Linear HO, RDC, T12	4 ft.	2	T4
LZ2S40130	40	Comp Fluor, Long Twin Tube, 4 Pin	2 ft.	1	T4
LZ2S55130	55	Comp Fluor, Long Twin Tube, 4 Pin	2 ft.	1	T4
LZ2S40230	40	Comp Fluor, Long Twin Tube, 4 Pin	2 ft.	2	T4

Class I, Div. 2, Groups A, B, C and D; Class II, Div. 1, Groups E, F and G; Class III; Temperature Coded T3C, T3B, T4A, or T6:
Class I, Zone 2, Ex nA T3, T4 or T6
- Fluorescent Fixture with Emergency battery back up, Series LZ2SE, followed by 1 or 2; followed by 17, 28, 32, 40, 44, 54, 55 or 60; followed by 1, 2, 3 or 4; followed by 01, 04, 08, 15, 30, 35, DC012, DC024 or DC120 followed by F1, F4, F5 or F8. Rated 480 VAC max, 60 W max, 1, 2, 3 or 4 lamps, 24 or 48 inches.

Operating Temperature, °C, Operating Temperature Code

Cat. Series	W	Lamp Type	Lamp Compart-ment Length	Number of Lamps	Class I, Div. 2 Gr A,B,C & D; Zone 2 Gr IIC, IIB, IIA	Class II, Div. 1, Groups F and G	Supply Wire Suitable For °C
LZ2SE40130	40	Comp Fluor, Long Twin Tube, 4 Pin	2 ft.	1N, 1E	T3C	T6	75
LZ2SE55130	55	Comp Fluor, Long Twin Tube, 4 Pin	2 ft.	1N, 1E	T3B	T6	60
LZ2SE40230	40	Comp Fluor, Long Twin Tube, 4 Pin	2 ft.	2N, 1E	T3C	T6	75
LZ2SE40430	40	Comp Fluor, Long Twin Tube, 4 Pin	4 ft.	4N, 1E	T3C	T6	75
LZ2SE21730	17	Fluor Linear Bi Pin, T8	4 ft.	2N, 2E	T6	T6	60
LZ2SE21733	17	Fluor Linear Bi Pin, T8	4 ft.	3N, 2E	T6	T6	60
LZ2SE28230	28	Fluor Linear Bi Pin, T5	4 ft.	2N, 1E	T4A	T6	60
LZ2SE28330	28	Fluor Linear Bi Pin, T5	4 ft.	3N, 1E	T4A	T6	60
LZ2SE32230	32	Fluor Linear Bi Pin, T8	4 ft.	2N, 1E	T6	T6	60
LZ2SE32330	32	Fluor Linear Bi Pin, T8	4 ft.	3N, 2E	T6	T6	60
LZ2SE32230	32	Fluor Linear Bi Pin, T8	4 ft.	3N, 1E	T6	T6	60
LZ2SE32330	32	Fluor Linear Bi Pin, T8	4 ft.	3N, 2E	T6	T6	60
LZ2SE40201	40	Fluor Linear Bi Pin, T12	4 ft.	2N, 1E	T6	T6	60
LZ2SE40204	40	Fluor Linear Bi Pin, T12	4 ft.	2N, 1E	T6	T6	60
LZ2SE40208	40	Fluor Linear Bi Pin, T12	4 ft.	2N, 1E	T4A	T6	60
LZ2SE44230	44	Fluor Linear HO, RDC, T8	4 ft.	2N, 1E	T3C	T6	60
LZ2SE54230	54	Fluor Linear Bi Pin, T5	4 ft.	2N, 1E	T3C	T6	75
LZ2SE60201	60	Fluor Linear HO, RDC, T12	4 ft.	2N, 1E	T4	T6	75
LZ2SE60204	60	Fluor Linear HO, RDC, T12	4 ft.	2N, 1E	T4	T6	75

LZINT7230	17	Fluor Linear Bi Pin, T5		48 in.	2	T6
LZINT7230	17	Fluor Linear Bi Pin, T5		48 in.	3	T6
LZIN28230	28	Fluor Linear Bi Pin, T5		48 in.	2	T4
LZIN28330	28	Fluor Linear Bi Pin, T5		48 in.	3	T4
LZIN32230	32	Fluor Linear Bi Pin, T8		48 in.	2	T6
LZIN32315	32	Fluor Linear Bi Pin, T8		48 in.	2	T6
LZIN32330	32	Fluor Linear Bi Pin, T8		48 in.	3	T6
LZIN32315	32	Fluor Linear Bi Pin, T8		48 in.	3	T6
LZIN40130	40	Comp Fluor, Long Twin Tube, 4 Pin		24 in.	1	T5
LZIN40115	40	Comp Fluor, Long Twin Tube, 4 Pin		24 in.	1	T5
LZIN40230	40	Comp Fluor, Long Twin Tube, 4 Pin		24 in.	2	T5
LZIN40330	40	Comp Fluor, Long Twin Tube, 4 Pin		24 in.	2	T5
LZIN40215	40	Comp Fluor, Long Twin Tube, 4 Pin		24 in.	2	T5
LZIN40430	40	Comp Fluor, Long Twin Tube, 4 Pin		48 in.	4	T4
LZIN40415	40	Comp Fluor, Long Twin Tube, 4 Pin		48 in.	4	T4
LZIN40201	40	Fluor Linear Med Bi Pin, T12		48 in.	2	T4
LZIN40204	40	Fluor Linear Med Bi Pin, T12		48 in.	2	T4
LZIN40208	40	Fluor Linear Med Bi Pin, T12		48 in.	2	T4
LZIN44201	44	Fluor Linear HO, RDC, T12		48 in.	2	T5
LZIN44204	44	Fluor Linear HO, RDC, T12		48 in.	2	T5
LZIN54230	54	Fluor Linear Bi Pin, T5		48 in.	2	T4
LZIN55130	55	Comp Fluor, Long Twin Tube, 4 Pin		24 in.	1	T3
LZIN60201	60	Fluor Linear HO, RDC, T12		48 in.	2	T4
LZIN60204	60	Fluor Linear HO, RDC, T12		48 in.	2	T4

Note: Supply Wire Temperature is the same as tabulated under Table IFor each corresponding Series catalog number.
Class I, Div. 2, Groups A, B, C and D; Class II, Div. 1, Groups F and G;
Class I, Zone 2 IIC, IIB, IIA;
Class I, Zone 2 AEx nA; Enclosure Type 4X; IP66.

- Fluorescent Fixture Series LZ2NE, followed by 1 or 2; followed by 17, 28, 32, 40, 44, 54, 55 or 60; followed by 1, 2, 3 or 4; followed by 01, 04, 08, 15, 30, 33 or DC120; followed by F1, F4, F5, F8 TBx, Px or Qc; Rated 480 VAC max, 120 VDC max, 60 W max; 1, 2, 3 or 4 lamps, 24 or 48 inches.

Temperature Coded as Follows:

Cat. Series	W	Lamp Type	Lamp Compart-ment Length	Number of Lamps	Class I, Div. 2 Gr A,B,C & D; Zone 2 Gr IIC, IIB, IIA	Class II, Div. 1, Groups F and G	Supply Wire Suitable For ° C
LZINE1217230	17	Fluor Linear Bi Pin, T5	48 in.	2	T6	T6	60
LZINE2173330	17	Fluor Linear Bi Pin, T5	48 in.	3	T6	T6	60
LZINE1285230	28	Fluor Linear Bi Pin, T5	48 in.	2	T4A	T6	60
LZINE1283330	28	Fluor Linear Bi Pin, T5	48 in.	3	T4A	T6	60
LZINE2-32230	32	Fluor Linear Bi Pin, T8	48 in.	2	T6	T5	75
LZINE2-32330	32	Fluor Linear Bi Pin, T8	48 in.	3	T6	T5	75
LZINE1-40130	40	Comp Fluor, Long Twin Tube, 4 Pin	24 in.	1	T5	T5	60
LZINE1-40230	40	Comp Fluor, Long Twin Tube, 4 Pin	24 in.	2	T5	T5	60
LZINE1-40430	40	Comp Fluor, Long Twin Tube, 4 Pin	48 in.	4	T4A	T5	60
LZINE2-40201	40	Fluor Linear Med Bi Pin, T12	48 in.	2	T4A	T5	60
LZINE2-40204	40	Fluor Linear Med Bi Pin, T12	48 in.	2	T4A	T5	60
LZINE2-40208	40	Fluor Linear Med Bi Pin, T12	48 in.	2	T4A	T5	60
LZINE1-44201	44	Fluor Linear HO, RDC, T12	48 in.	2	T5	T5	60
LZINE1-44204	44	Fluor Linear HO, RDC, T12	48 in.	2	T5	T5	60
LZINE2254230	54	Fluor Linear Bi Pin, T5	48 in.	2	T3C	T6	75
LZINE1255130	55	Comp Fluor, Long Twin Tube, 4 Pin	24 in.	1	T3B	T6	60
LZINE1-60201	60	Fluor Linear HO, RDC, T12	48 in.	2	T4	T5	75
LZINE1-60204	60	Fluor Linear HO, RDC, T12	48 in.	2	T4	T5	75

Table I A: Temperature Code AEx nA/ Ex nA

Cat.Series	W	LampType	Lamp Compart-ment Length	Number of Lamps	Temperature Code
LZINE2172230	17	Fluor Linear Bi Pin, T5	48 in.	2	T6
LZINE2173330	17	Fluor Linear Bi Pin, T5	48 in.	3	T6
LZINE1285230	28	Fluor Linear Bi Pin, T5	48 in.	2	T4
LZINE1283330	28	Fluor Linear Bi Pin, T5	48 in.	3	T4
LZINE2-32230	32	Fluor Linear Bi Pin, T8	48 in.	2	T6
LZINE2-32330	32	Fluor Linear Bi Pin, T8	48 in.	3	T6
LZINE1-40130	40	Comp Fluor, Long Twin Tube, 4 Pin	24 in.	1	T5
LZINE1-40230	40	Comp Fluor, Long Twin Tube, 4 Pin	24 in.	2	T5
LZINE1-40430	40	Comp Fluor, Long Twin Tube, 4 Pin	48 in.	4	T4
LZINE2-40201	40	Fluor Linear Med Bi Pin, T12	48 in.	2	T4
LZINE2-40204	40	Fluor Linear Med Bi Pin, T12	48 in.	2	T4
LZINE2-40208	40	Fluor Linear Med Bi Pin, T12	48 in.	2	T4
LZINE1-44201	44	Fluor Linear HO, RDC, T12	48 in.	2	T5
LZINE1-44204	44	Fluor Linear HO, RDC, T12	48 in.	2	T5
LZINE2254230	54	Fluor Linear Bi Pin, T5	48 in.	2	T4
LZINE1255130	55	Comp Fluor, Long Twin Tube, 4 Pin	24 in.	1	T3
LZINE1-60201	60	Fluor Linear HO, RDC, T12	48 in.	2	T4
LZINE1-60204	60	Fluor Linear HO, RDC, T12	48 in.	2	T4

Note: Supply Wire Temperature is the same as tabulated under Table IFor each corresponding Series catalog number.
Class I, Div. 2, Groups A, B, C and D; Class II, Div. 1, Groups E, F and G;
Class III; Temperature Coded T3C, T3B, T4A, or T6;
AEx nA T3, T4 or T6

- Fluorescent Fixture for use in hazardous locations, Series LZ2S, followed by 17, 28, 32, 40, 44, 54, 55 or 60; followed by 1, 2, 3 or 4; followed by 01, 04, 08, 15, 30, 33 or DC120; Rated 480 V AC max, 120 VDC max, 60 W max, 1, 2, 3, or 4 lamps, 24 inches or 48 inches

Class I, Division 2, Groups A, B, C and D, Temperature Coded T3C or T2B:

- KILLARK VMIS Series, Model Number VM-XXXXXX, rated 480 V max, 100 W max, may be supplied with either Globe, Enclosed Reflector, or Refractor. For use with supply wiring rated 60° C or higher.

Class I, Division 2, Groups A, B, C and D; Class II, Division 1, Groups E, F and G; Class III; Temperature Coded T3C:
Class I, Zone 2, AEx nA nR II; Temperature Coded T4, T5 or T6:

- KILLARK VMIQ Series, Model Number VM-XXXXXX, rated 480 V max, 55 W max, may be supplied with either Globe, Enclosed Reflector, Refractor or with VZRP175 OPTIC. For use with supply wiring rated 75° C or higher.

NOTES:
1. Suffixes denote Lamp Type, Cover Type, Conduit Size, Lamp Wattage, Input Voltage and Optics.
2. Detail Temperature Codes or Maximum Surface Temperature are covered under Table I for Class I, Div. 2; Class II and Class III; and Table 2 for Class I, Zone 2, Ex nA II/AEx nR II

Class I, Div. 2, Groups A, B, C and D; Class II, Div. 1, Groups F and G; Temperature Coded T3 or T5; Class III, Enclosure Type 3 and/or 4
Class I, Zone 2, Ex nA II T3; IP66, IP67 & IP68.

- Series INWP followed by FN or FE; followed by 13, 18, 26,1818, 2626,0018 or 0026; followed by 30 or DC120, may be followed by P or S.

Class I, Div. 2, Groups A, B, C and D; Class II, Div. 1, Groups F and G; Temperature Coded T3, T5 or T6; Class III, Enclosure Type 3 and/or 4
Class I, Zone 2, AEx nA II T3 or T6; IP66, IP67 & IP68.

- Compact Fluorescent Lighting Fixtures, Series INWP followed by FN or FE; followed by 13, 18, 26, 1313, 1818, 2626, 0013, 0018 or 0026; followed by 30 or DC120, may be followed by A, AA, P, PP, S or SS, may be followed by P1 or P2: rated 277 VAC max, 125 VDC max, 26 W max.

Class I, Division 2, Groups A, B, C and D; Class II, Division 1, Groups E, F and G; Class III; Temperature Coded T4A or T4, T5 or T6; Type 4X (where applicable). Marine (where applicable)

- LED Luminaires for use in hazardous locations, Series VMKL, rated 480 V max, 50W max.

Class I, Division 2, Groups A, B, C and D; Class II, Division 1, Groups E, F and G; Class III; Enclosure Type 4, Marine; Temperature Coded T4A (Class I, Div. 2) & T4 (Class II, Div. 1):

- LED Luminaires for use in hazardous locations, Series MBL, rated 480 Volts max, 50W max.

Note: Series Catalog number are followed with alphanumeric suffixes to denote electrical and mechanical variations. Maximum Operating Ambient 40°C or 55°C
Class I, Division 1, Groups C and D; Class II, Division 1, Groups E, F and G; Class III; Temperature Coded T5, T5, T4A or T4, Enclosure Type 4

- LED Luminaires for use in hazardous locations, Series EML, EML.C rated 277 V max, 50W max.

Class I, Division 2, Groups A, B, C and D; Class II, Division 1, Groups E, F and G; Class III; Class I, Zone 2; Temperature Coded T4A, T4 or T3C (where applicable); Enclosure Type 4X, Marine:

- LED Luminaires for use in hazardous locations, Series VMKL and MKML, rated 480 V max, 50/60 Hz, 130W max. 125/250 VDC, 130 W max and Series VMZL and MMZL, rated 480 V max, 50/60 Hz , 65W max, 125/250 VDC, 65W max

Note: Detail Temperature Code is covered under TABLE 1 below:
Consisting with the following Luminaires Fixtures:
Optics – VMK25, VMP255, VMR251, VMR253, V2RK4050, VMER40, VMEP40, VZRP175B
Guards – VMA5255, VMRWG5, VMERG
Reflectors – VMPSD40, VMPA40
Mounting Splice Boxes – VMA2B, VMA1B, VMP2B, VMP3B, VMX2B, VMX3B, VMX6B, VMX7B, VMX8B, VMX9B, VMB2B, VMB3B, VMC2B, VMC3B, VMD4B, VMD5B, VMS4B, VMS5B
LED Tank Assembly: VMKL12030, may be followed by A, B, K, C, D, S followed by 2, 3, 4, 5, 6, 7, 8, 9 followed by GL, GG, P5, P1, 5B, S2, S5, P5 followed by G, N followed by F, FF, TBX, QD, PX.

TABLE 1
Operating Temperature, °C (Operating Temperature Code)

Catalog Number	Rated Ambient Temp °C	LED Type	LED Watts	Class I, Div. 2 Groups A, B, C & D (Globe/Refractor w/ Reflector)	Class II, Div. 1 Groups E F & G (Globe/Refractor w/ Reflector)	Supply Wire Temp Deg C
VM4L/WM4L (B/C)12030/33/34	40	D/E XP-L	130	T4A	T3C	75
VM4L/WM4L (B/C)12030/33/34	55	D/E XP-L	130	T4	T3C	90
VM4L/WM4L 12030/33/34	40	A XP-L	120	T4A	T3C	75
VM4L/WM4L 12030/33/34	55	A XP-L	120	T4	T3C	90
VM4L/WM4L (B/C)12030/33/34	40	B XP-L	120	T4A	T3C	75
VM4L/WM4L (B/C)12030/33/34	55	B XP-L	120	T4	T3C	90
VM4L/WM4L (B/C)12033	40	B XP-L	120	T4A	T3C	75
VM4L/WM4L (B/C)12033	55	B XP-L	120	T4	T3C	90
VM4L/WM4L (B/C)10530/33/34	40	C XP-L	105	T4A	T3C	75
VM4L/WM4L (B/C)10530/33/34	55	C XP-L	105	T4	T3C	90
VM4L/WM4L (B/C)10534	40	C XP-L	105	T4A	T3C	75
VM4L/WM4L (B/C)10534	55	C XP-L	105	T4	T3C	90
VM4L/WM4L (B/C)10030/33/34	40	D/E XP-L	100	T4A	T3C	75
VM4L/WM4L (B/C)10030/33/34	55	D/E XP-L	100	T4	T3C	90

				90	T4A	T3C	75	
VM4L,VM4L (B/C)09030/33/34	55		D/E XP-L	90	T4	T3C	90	
VM4L,VM4L (B/C)08030/33/34	40		C XP-L	80	T4A	T3C	75	
VM4L,VM4L (B/C)08030/33/34	55		C XP-L	80	T4	T3C	90	
VM4L,VM4L (B/C)07030/33/34	40		D/E XP-L	70	T4A	T3C	75	
VM4L,VM4L (B/C)07030/33/34	55		D/E XP-L	70	T4	T3C	90	
VM4L,VM4L (B/C)06530/33/34	40		C XP-L	65	T4A	T3C	75	
VM4L,VM4L (B/C)06530/33/34	55		C XP-L	65	T4	T3C	90	
VM4L,VM4L (B/C)05530/33/34	40		C XP-L	55	T4A	T3C	75	
VM4L,VM4L (B/C)05530/33/34	55		C XP-L	55	T4	T3C	90	
VM4L,VM4L (B/C)05030/33/34	40		D/E XP-L	50	T4A	T3C	75	
VM4L,VM4L (B/C)05030/33/34	55		D/E XP-L	50	T4	T3C	90	
VM4L,VM4L (B/C)04030/33/34	40		C XP-L	40	T4A	T3C	75	
VM4L,VM4L (B/C)04030/33/34	55		C XP-L	40	T4	T3C	90	
VM4L,VM4L (B/C) 065E1330/33/34	40		XP-L	65	T5	T3C	75	
VM4L,VM4L (B/C)055E1330/33/34	40		XP-L	55	T5	T3C	75	
VM4L,VM4L (B/C)050E1330/33/34	40		XP-L	50	T5	T3C	75	
VM4L,VM4L (B/C)040E1330/33/34	40		XP-L	40	T5	T3C	75	
VM4L,VM4L (B/C)065E1330/33/34	50		XP-L	65	T4A	T3C	75	
VM4L,VM4L (B/C)055E1330/33/34	50		XP-L	55	T4A	T3C	75	
VM4L,VM4L (B/C)050E1330/33/34	50		XP-L	50	T4A	T3C	75	
VM4L,VM4L (B/C)040E1330/33/34	50		XP-L	40	T4A	T3C	75	

1. Notes: Series Cat. No VM4L, WM4L, VM3L and WM3L are followed with alphanumeric suffixes denoting electrical and mechanical variations.
2. Suitable for wet locations and may be marked with IP66
3. May be marked "Marine Luminaire" and "Outdoor Type" when provided with stranded wiring, and without fusing option

Class I, Division 2, Groups A, B, C and D, Temperature Coded: T2B, T2D, T3, T3A or T3C; Class II, Groups E, F, G; Class III; Enclosure Types 3 and/or 4 (where applicable)
Class I, Zone 2, AEx nR, T4, T5 or T6; IP66
- Compact Fluorescent Luminaires, Series VQJF, VQ2F rated 347 VAC, 50/60 Hz or 125VDC+/- 10%, 84 W max.; may be supplied with either Globe, Enclosed Reflector, or Refractor.

NOTES:
1) Suffixes denote Lamp Type, Cover Type, Conduit Size, Lamp Wattage, Input Voltage and Optics.
(2) Detail Temperature Codes or Maximum Surface Temperature are covered under Tables 1 – 4 (Class I, Div. 2; Class II and Class III; Class I, Zone 2, Ex nA, nA II/AEx nA ,nA II)
Consisting with the following Luminaires Fixtures:
Ballast Tank Assembly
Series VQJF or VQ2F followed by 13, 18, 26, 26S, 32, 36, 42, 52, 64 or 84; followed by 30 or 15; may be followed by NR, F, FF, TBx, P1, P2, P3 or QD.
Optics
VMG2S, VMG2ST, VMG2SF, VMR2St, VMR2STT, VMR3S3, VMR3s3T, VMR3bs, VMR3bsT, VMSFHd, VMSFHD, VZPG4020, VZPG4050, VZPRPTSB (VQ2F)
VMG1T, VMG1TF, VMG1TT, VMR1T1, VMR1T1T, VMR1Ts, VMR1TST, VZPG1650, VZRG2650, VZRG2520, VZRP1Ts (VQJF)
External Guards
VMAG2SS, VMEHG, VMRWG (VQ2F)
VMAG1T, VMRWGB (VQJF)
External Reflectors
VMPSD40, VMPA40
Mounting Splice Boxes
VMA2B, VMA3B, VMF2B, VM3FB, VMX2B, VMX3B, VMX6B, VMX7B, VMX8B, VMX9B, VM82B, VM93B, VMC2B, VMC3B, VMD4B, VMDSB, VMS4B, VMS5B
Optics
NR, F, FF, TBx, P1, P2, P3, QD

Class I, Division 2, Groups A, B, C and D; Class I, Zone 2; Class II, Div. 2, Groups F and G; Enclosure Type 4; Temperature coded: T6 or T5.
- LED luminaire fittings for use in hazardous locations, Series VSL-13, rated 277 Volts max, 13W max, VSL-16, rated 277V max, 16W max

Notes:
1. Series VSL-13/-16 is followed with alphanumeric suffixes to denote mechanical and electrical variations
2. Ambient 40 and 55C where applicable

Class I, Division 2, Groups A, B, C and D; Class II, Division 1, Groups E, F and G; Class III; Enclosure Type 4; Temperature Coded T4A or T4(Class I, Div. 2), T3C (Class II, Div. 1)
- LED luminaires for use in hazardous locations, Series MBLF, rated 277 VAC max, 22W max.

Note:
1. Series Cat. No. MBLF is followed with alphanumeric suffixes denoting electrical and mechanical variations
2. Ambient 40 and 55C where applicable

Class I, Division 1 and 2, Groups B, C, D; Class II, Division 1, Groups E, F and G; Class III; Enclosure Type 4; Temperature Coded T6
- Emergency battery system for use in hazardous locations, Series EBS23DH, rated 277 Volts maximum, 50/60 Hz; 23Watts Maximum; utilizing EBSELI030 LED luminaires head(s) and /or EBSHK luminaires head(s).

Class I, Division 1 and 2, Groups C, D; Class II, Division 1, Groups E, F and G; Class III; Enclosure Type 4; Temperature Coded T6
- Emergency battery system for use in hazardous locations, Series EBS23DH, rated 277 Volts maximum, 50/60 Hz; 23 Watts Maximum; utilizing EBSELI030 LED luminaires head(s) and /or EBSHK luminaires head(s).

Class I, Div. 1, Groups C and D; Class II, Div. 1, Groups E, F and G; Class III; Enclosure Types 3, 4 and 4X; Temperature Coded T6 (Class I, Groups C and D); T4 (Class II, Groups E, F & G):
- Fluorescent Fixture Series EOF, followed by 26, 32, 42, 52, 64 or 84; followed by 30, 19 or 24DC; followed by A, D, X or D; followed by 2, 3, 4 or 5; followed by G or GG; may be followed by D, A and/or N-; Rated 277 VAC max, 50/60 Hz, 84 W max; 24VDC, 60W max or 125VDC+/- 10%, 84W max.

Class I, Groups C and D; Class II, Groups E,F,G; Class III; Temperature Coded T6, T5 or T4A (where applicable)
- Series HFXE: Fluorescent Fixtures, with Emergency backup; Cat. No. HFXE, followed by 1 or 2, followed by 40T, 55T, 170 ,265 , 430, 460 or 800; followed by 1, 4 or 30; followed by 2, 3 or 4; may be followed by F, FF,, or WL,. Rated 347 VAC max, 800mA max

Class I, Div. 1, Groups C and D; Class II, Div. 1, Groups E, F and G; Class III; Enclosure Type 4.
- Fluorescent luminaires, Series HFX, rated 480V max, 50 or 60 HZ, 110W max,560W max fixture input wattage, with suffixes to denote lamp type, lamp wattage, input voltage and options:

Lamp Type	Lamp Rating	Temp Code - Class I	Temp Code - Class II
17W	17 W	T6	T4A - EFG
40T	40 W	T6	T4A - EFG
55T	55 W	T6	T4A - EFG
170	170 ma, 28 W	T6	T4A - EFG
265	265 mA, 32 W	T5	T4A - EFG
300	300 mA, 24 W	T6	T4A - EFG
430	430 mA, 40 W	T5	T4A - EFG
460	400 mA, 54 W	T6	T4A - EFG
800	800 mA, 60 W	T5	T4A - EFG
1500	1500 mA, 110 W	T5	T4A - EFG

- LED luminaries, Series HLLX, rated 480V max, 50 or 60 HZ, 170W max, with suffixes to denote, lamp wattage, input voltage and options:

Cat No	Fixture Wattage	Rated Ambient °C	Temp Code Class I	Temp Code Class II
HLLX170	170	55	T6	T4A
HLLX22	170	55	T6	T4A
HLLX170	170	40	T6	T4A
HLLX22	170	40	T6	T4A
HLLX110	110	55	T6	T4A
HLLX15	110	55	T6	T4A
HLLX110	110	40	T6	T4A
HLLX15	110	40	T6	T4A
HLLX085	85	55	T6	T4A
HLLX11	85	55	T6	T4A
HLLX085	85	40	T6	T4A
HLLX11	85	40	T6	T4A
HLLX055	55	55	T6	T4A
HLLX7	55	55	T6	T4A
HLLX055	55	40	T6	T4A
HLLX7	55	40	T6	T4A
HLLX035	35	55	T6	T4A
HLLX6	35	55	T6	T4A
HLLX035	35	40	T6	T4A
HLLX6	35	40	T6	T4A
HLLX024	24	55	T6	T4A
HLLX4	24	55	T6	T4A
HLLX024	24	40	T6	T4A
HLLX	24	40	T6	T4A

Class I, Division 2, Groups A, B, C and D; Class II, Division 1, Groups E, F and G; Class III; T4A, T5 or T6 (Class I, Div. 2), T3C (Class II, Div. 1), T3C (Class I, Div 2 / Class II, Div. 1 Simultaneous Exposure); Type 4X; IP66; Marine Rated:
- LED luminaires for use in hazardous locations, Series KFL, rated 480 VAC max, 190 Watts max, 50/60 Hz.

Notes:
1. Series Cat. No. KFL is followed by alphanumeric suffixes denoting electrical and mechanical variations. (See Nomenclature breakdown below.)
2. Ambient 40 and 55C where applicable

Class I, Division 2, Groups A, B, C and D:
<![if !supportLists]> - <![endif]>LED luminaire fittings for use in hazardous locations, Series DVL13XX, rated 277 Volts max, 13W max, DVL16XX, rated 277V max, 16W max. Temperature Coded T6, Ambient 40C; T5, Ambient 55C
Class II, Groups E, F and G; Class III
<![if !supportLists]> - <![endif]>LED luminaire fittings for use in hazardous locations, Series DVL13XX, rated 277 Volts max, 13W max, DVL16XX, rated 277V max, 16W max. Temperature Coded T3B, Ambient 40C.
<![if !supportLists]> - <![endif]>Incandescent and Self Ballasted Compact Fluorescent luminaire fittings for use in hazardous locations. Series DV100 Incandescent rated maximum 100W, maximum 300 Volts, Temperature Coded T3B, Ambient 40C. Series DV200 Incandescent rated maximum 200W, maximum 300 Volts, Temperature Coded T3B, Ambient 40C. Series DV100 or DV200 Self Ballasted Compact Fluorescent rated 42W 120 Volts, Temperature Coded T3B, Ambient 40C.
Notes:
1. Series DVL13/16 is followed with alphanumeric suffixes to denote mechanical and electrical variations
2. Series DVL13/16 ambient 40C and 55C where applicable.
3. Series DV is followed with alphanumeric suffixes to denote mechanical and electrical variations.

Class I, Division 2, Groups A, B, C and D; Class II, Division 1, Groups E, F and G; Class III; Enclosure Type 4X
- KILLARK Series VMCHVM fixture mount adaptors, Model Numbers VMCHVM and VMCHVM-DEEP, for use with specified fixture fittings in conjunction with KILLARK Series VM fixtures, rated 480 V max, 400 W max.; may be supplied with either Globe, Enclosed Reflector, or Refractor. For use with supply wiring rated 60°C or higher.

Note: KILLARK VMCHVM fixture Adaptors are for use with Listed Crouse Hinds Fixtures Cat. Nos. CM2, CM3, TWM2 and TWM3 Mounting Covers in conjunction with CSA Listed Series VM fixture fittings, rated 480 V max, 400W max.
- KILLARK Series VM fixture mount adaptors, Model Numbers VMGEH2, VMHLDS, VMHPP2, VMM2LP, VMM3KP, and SPL26748, for use with specified fixture fittings in conjunction with KILLARK Series VM fixtures, rated 480 V max, 400 W max.; may be supplied with either Globe, Enclosed Reflector, or Refractor. For use with supply wiring rated 60°C or higher.

Note: KILLARK VM Series fixture Adaptors are for use on Listed Crouse Hinds and Appleton Fixture Mounting Covers (See table below) in conjunction with CSA Certified / UL Listed Series VM fixture fittings, rated 480 V max, 600W max. KILLARK VMAG2 fixture adaptors are for use with Certified/Listed General Electric Series H2 Fixtures, (See Table Below for list of Cat numbers) in conjunction with Certified/Listed Series VM fixture fittings, rated 480 V max, 600W max. KILLARK VMHPP2 fixture adaptors are for use with Certified/Listed HoloPhane Series P2 (Petrolux II) Fixtures, in conjunction with Certified Series VM fixture fittings, rated 480 V max, 600W max.

Killark VM Adaptor Model	For Use With
VMGEH2	GE® filtr-gard® H2; Using fixture mounts H2000-3C, H2000-4C, H2000-3F, H2000-4F, H2000-5S, H2000-6S, H2000-3W, H2000-4W, H2000-6P
VMHLDS	Thomas and Betts® Hubbs® M2, M3; Hubbell® H13; Hauka® 2, 3; Using fixture mounts HV1, VP2, VF2, VA2, VC2, VB2, VS5 and VL5

VMHPP2 Holophane® Petrolux® II or Petrolux® I
VMM2LP

Appleton™ MercMaster™ III or MercMaster™ LED Series;
Using fixture mounts KPA-75/100/M35, KPCH-75/100/M20,
KPC-75/100/M20, KPWB-75/100/M20, KPS-125/150, KPST-125/150
SPL26748
Holophane® Petrolux™ II - Using ceiling mounting cover (PETLCE)

Class I, Division 2, Groups A, B, C & D; Temperature Coded T3:
- Fluorescent Fixture for use in hazardous locations, Series NVP5, rated 277 V max, 28W max. Temperature Coded T3, Ambient 40C.
- LED Fixture for use in hazardous locations, Series NVL, rated 277 V max, 15W max. Temperature Coded T4, Ambient 40C

Class II, Division 2, Groups F and G; Class III; Type 4; Temperature Coded T4; TYPE 3, 4 AND 4X:
- Fluorescent Fixture for use in hazardous locations, Series NVP5, rated 277 V max, 28W max. Temperature Coded T4, Ambient 40C.

- Incandescent Fixture for use in hazardous locations, Series NVP1, rated 277 V max, 40W max.; or medium socket self ballasted CFL GE FLE26HT3/2RVLCD2: Temperature Coded T4, Ambient 40C.
- LED Fixture for use in hazardous locations, Series NVL, rated 277 V max, 15W max. Temperature Coded T4, Ambient 40C

Note: Alphanumeric suffixes are added to the Catalogue Number to denote electrical and mechanical variations.

Class I, Division 2, Groups A, B, C and D; Class II, Division I, Groups E, F and G; Class III) T4A (Class I, Div. 2), T3C or T4 (Class II, Div. 1), T3C or T4 (Class I, Div 2 / Class II, Div. 1 Simultaneous Exposure): Type 4X; Marine Rated: IP66
- LED luminaires for use in hazardous locations, Series KFLC, rated 120-277 VAC, 50/60 Hz or 100-250 VDC or 12-24 VDC, 50 Watts max.

Notes:
1. Series Cat. No. KFLC is followed by alphanumeric suffixes denoting electrical and mechanical variations.
2. Maximum Ambient 40°C or 55°C as applicable (see Table below for specification).

Catalog Number	Max Ambient Temp °C	LED Type	Total LED Watts	Class I, Div. 2 Groups A, B, C & D	Class II, Div. 1 Groups E F & G*	Class I, Div. 2 & Class II, Div. 1 Simultaneous Exposure*	Supply Wire Temp ° C
KFLC5030	40	LED "F"	50	T4A	T4	T4	75
KFLC5030	55	LED "F"	50	T4A	T3C	T3C	90
KFLC4530	40	LED "D/E"	45	T4A	T4	T4	75
KFLC4530	55	LED "D/E"	45	T4A	T3C	T3C	90
KFLC4030	40	LED "D/E"	40	T4A	T4	T4	75
KFLC4032	55	LED "D/E"	40	T4A	T3C	T3C	90
KFLC3530	40	LED C	35	T4A	T4	T4	75
KFLC3530	55	LED C	35	T4A	T3C	T3C	90
KFLC3030	40	LED C	30	T4A	T4	T4	75
KFLC3030	55	LED C	30	T4A	T3C	T3C	90
KFLC2327	40	LED "D/E"	23	T4A	T4	T4	75
KFLC2327	55	LED "D/E"	23	T4A	T3C	T3C	90
KFLC2334	40	LED "D/E"	23	T4A	T4	T4	75
KFLC2334	55	LED "D/E"	23	T4A	T3C	T3C	90
KFLC2027	40	LED "D/E"	20	T4A	T4	T4	75
KFLC2027	55	LED "D/E"	20	T4A	T3C	T3C	90
KFLC2034	40	LED "D/E"	20	T4A	T4	T4	75
KFLC2034	55	LED "D/E"	20	T4A	T3C	T3C	90
KFLC1827	40	LED C	18	T4A	T4	T4	75
KFLC1827	55	LED C	18	T4A	T3C	T3C	90
KFLC1834	40	LED C	18	T4A	T4	T4	75
KFLC1834	55	LED C	18	T4A	T3C	T3C	90
KFLC1527	40	LED C	15	T4A	T4	T4	75
KFLC1527	55	LED C	15	T4A	T3C	T3C	90
KFLC1534	40	LED C	15	T4A	T4	T4	75
KFLC1534	55	LED C	15	T4A	T3C	T3C	90

Fixtures with polycarbonate lenses will be restricted to 40C ambient for Class II Div. 1 environments.
Notes:
1. Class I, Division 2 ratings are based on the maximum internal junction temperature on the LED. This value is calculated using the following formula:
Maximum LED Junction Temperature (Tj) = (LED Case/ Solder Point Temperature on Cathode side (Tsl)) + (Input Wattage (W) * Heat Resistance from Dice to Tsl Measuring Point (Rjsl) given by manufacturer)), or more simply: Tj = Tsl + W*Rjsl
2. Class II, Division 1 and Class I, Division 2/Class II, Division 1 Simultaneous Exposure ratings are based on the temperatures attained during the dust blanket test. The polycarbonate lens cannot be used in a dust environment

Class I, Division 2, Groups A, B, C and D; Class II, Division I, Groups E, F and G; Class III) CSA Encl. Types 3 and 4; Temperature Coded T3C, T3B, T4, T4A, T5 or T6 (where applicable):

- Series DBF, Fluorescent Lighting Fixtures Rated 480 VAC max, 800 mA max, 50 or 60Hz. Series Cat. Nos: DBF32A2B (Two Lamps), DBF32A3B (Three Lamps), rated 480 VAC max, 265 mA; DBF40A2B (Two Lamps), DBF40A3B (Three Lamps), rated 347 V ac max. 430 mA; DBF60A2B (Two Lamps), DBF60A3B (Three Lamps), rated 347 V ac max. 800 mA, DBF54A2B (two lamps) rated 480VAC max, DBF54A3B (three lamps) 480VAC max. 460mA; DBF28A2B (two lamps), DBF28A3B (three lamps) rated 277 VAC max. 170 mA. DBF56A4B (four blax lamps) 347VAC max.

- Series DBFE, Fluorescent Lighting Fixtures with emergency back- up Rated 347VAC max. , 800 mA max, 50 or/60 Hz. Series Cat. Nos.: DBFE128A2B (Two lamps), DBFE128A3B (Three lamps), rated 347VAC max/70 mA; DBFE132A2B (Two lamps), DBFE132A3B (Three lamps), DBFE232A2B (Two lamps), DBFE232A3B (Three lamps) rated 347VAC max. 275 mA ; DBFE240A2B (Two lamps), DBFE240A3B (Three lamps) rated 277VAC max 430 mA; DBFE154A2B (Two lamps), DBFE154A3B(Three lamps) 277VAC max. 400 mA, DBFE160A2B (two lamps), DBFE160A3B (Three lamps) 277VAC max. 800mA; DBFE155A4B (Four lamps) 277VAC max. 525 mA

Note: Series Cat. Nos. are followed by alphanumeric suffixes denoting electrical and mechanical variations
Class I, Division 1, Groups B, C and D; Class II, Division I, Groups E, F and G; Class III; T5 or T6 (Class I, Div. 1), T3A, T3C, T4, or T4A (Class II, Div. 1); Type 3 and 4X; IP66; Marine:
- LED luminaires for use in hazardous locations, Series KFIL, rated 480 VAC max, 195 Watts max, 50/60Hz.

Notes:
1. Series Cat. No. KFIL is followed by alphanumeric suffixes denoting electrical and mechanical variations. (See Nomenclature breakdown below.)
2. Ambient 40 and 55C where applicable
3. KFIL rated 150W to 195W LED are only suitable for use in Class I, Div. 1, Groups B, C and D; @ a 40C maximum ambient as shown under the Table below.

Temperature Coded as follows:

Catalog Number	Rated Ambient Temp °C	LED Type	Total LED Watts	Class I, Div. 1 Groups B, C & D	Class I, Zone 1 Groups IIA, IIB &IIC	Class II, Div.1 Groups E F & G (Luminaire Angle / T-Code)	Supply Wire Temp ° C
KFIL19530/34	**40**	**LED E**	**195**	**T5**	**T5**	--	**75**
KFIL16530/34	**40**	**LED E**	**165**	**T5**	**T5**	--	**75**
KFIL15030/34	**40**	**LED f**	**150**	**T5**	**T5**	--	**75**
KFIL12533	**40**	LED "D/E"	**125**	**T6**	**T6**	**0-180° : T3C 0-135° : T4 0-90° : T4A**	**75**
KFIL12533	**55**	LED "D/E"	**125**	**T5**	**T5**	**0-180° : T3A* 0-135° : T3C 0-90° : T4**	**90**
KFIL12530	**40**	LED "D/E"	**125**	**T6**	**T6**	**0-180° : T3C 0-135° : T4 0-90° : T4A**	**75**
KFIL12530	**55**	LED "D/E"	**125**	**T5**	**T5**	**0-180° : T3A* 0-135° : T3C 0-90° : T4**	**90**
KFIL11030	**40**	LED "D/E"	**110**	**T6**	**T6**	**0-180° : T3C 0-135° : T4 0-90° : T4A**	**75**
KFIL11030	**55**	LED "D/E"	**110**	**T5**	**T5**	**0-180° : T3A* 0-135° : T3C 0-90° : T4**	**90**
KFIL10530	**40**	LED "C"	**105**	**T6**	**T6**	**0-180° : T3C 0-135° : T4 0-90° : T4A**	**75**
KFIL10530	**55**	LED "C"	**105**	**T6**	**T6**	**0-180° : T3A* 0-135° : T3C 0-90° : T4**	**90**
KFIL09030	**40**	LED "C"	**90**	**T6**	**T6**	**0-180° : T3C 0-135° : T4 0-90° : T4A**	**75**
KFIL09030	**55**	LED "C"	**90**	**T6**	**T6**	**0-180° : T3A* 0-135° : T3C 0-90° : T4**	**90**

Note: * = Groups II and F only
Class I, Div. 2, Groups A, B, C and D; Class II, Div. 1, Groups E*, F and G; Class III; Temperature Coded, T4A, T5 or T6 (where applicable); Enclosure Type 4X; Ala nA, T4 or T5; IP66.

- LED Fixture for use in hazardous locations, Series LZ2X*L, followed by 13, 18, 28, 45, 19, 26, 40, 60, 27, 34, 55, 80, 35, 50, 75/20; followed by 19, 30, 33 or 34; followed by F, FF, TBLx, Px, QD, D20, D202, D25, D252, LZ2R, LF, GS or LS; Rated 277 V AC max, 250 VDC max, 120 W max, 24 inches or 48 inches.

Notes:
1. Where "X" in the catalog description can either be an "N" denoting a molded fiberglass reinforced polyester body or an "S" denoting a stainless steel enclosure.
2. * Class II, Groups E, F and G for Model LZ2SL only.
Class I, Division 2, Groups A, B, C and D; Class II, Division 1, Groups E, F and G; Class III; T4, T4A or T3C; Simultaneous Exposure to: Class I, Division 2, Groups A, B, C and D & Class II, Division 1, Groups E, F and G; Class III): Temperature Coded T3C or T4; Type 4X; Marine Rated; IP66
- LED luminaires for use in hazardous locations, Series KFLH, rated 120-480 VAC, 50/60 Hz 390 Watts max, 150-250VDC, 390 Watts Max
- Series KFL2H, rated 120-480 VAC, 50/60 Hz 780 Watts max, 150-250VDC, 780 Watts Max

Notes:
1. Series Cat. No. KFLH/KFL2H is followed by alphanumeric suffixes denoting electrical and mechanical variations.
2. Maximum Ambient 40°C or 55°C as applicable (see Table 1 below for specification).

Table 1 – Operating Temperatures

Catalog Number	Max Ambient Temp °C	LED Type	Total LED Watts	Class I, Div. 2 Groups A, B, C & D	Class II, Div. 1 Groups E F & G	Class I, Div. 2 & Class II, Div. 1 Simultaneous Exposure	Supply Wire Temp ° C
KFLH39030	**40**	**LED "B or D**	**390**	T3C	--	--	**75**
KFLH33030	**40**	**LED "B or D**	**330**	T3C	--	--	**75**
KFLH30030	**40**	**LED "C or D**	**300**	T4A	--	--	**75**
KFLH29030/33/34	**40**	**LED "B or D**	**290**	T4A	T4	T4	**75**
KFLH29030/33/34	**55**	**LED "B or D**	**290**	T4	T3C	T3C	**90**
KFLH22030/33/34	**40**	**LED "B or D**	**220**	T4A	T4	T4	**75**
KFLH22030/33/34	**55**	**LED "B or D**	**220**	T4	T3C	T3C	**90**
KFLH21030/33/34	**40**	**LED "A or D**	**220**	T4A	T4	T4	**75**
KFLH21030/33/34	**55**	**LED "A or D**	**220**	T4	T3C	T3C	**90**
KFLH17030/33/34	**40**	**LED "B or D**	**170**	T4	T3C	T3C	**90**
KFLH17030/33/34	**55**	**LED "B or D**	**170**	T4A	T4	T4	**75**
KFL2H78030/33	**40**	**LED " D"**	**780**	T4	--	--	**75**
KFL2H60030/33	**40**	**LED " D"**	**600**	T4A	--	--	**75**
KFL2H60030/33	**55**	**LED "D"**	**600**	T4	--	--	**75**
KFL2H50030/33/34	**40**	**LED " D"**	**500**	T4A	T4	T4	**75**
KFL2H50030/33/34	**55**	**LED " D"**	**500**	T4	T3C	T3C	**90**
KFL2H44030/33/34	**40**	**LED " D"**	**440**	T4A	T4	T4	**75**
KFL2H44030/33/34	**55**	**LED " D"**	**440**	T4	T3C	T3C	**90**
KFL2H42030/33/34	**40**	**LED " D"**	**420**	T4A	T4	T4	**75**
KFL2H42030/33/34	**55**	**LED " D"**	**420**	T4	T3C	T3C	**90**
KFL2H34030/33/34	**55**	**LED " D"**	**340**	T4	T4	T4	**75**

LED "B"= Cree XM-L2
LED "C"= Nichia 757D
LED "D"= Cree XP- L
Notes:
1) Class I, Division 2 ratings are based on the maximum internal junction temperature on the LED. This value is calculated using the following formula is:
Maximum LED Junction Temperature (Tj) = ([LED Case/ Solder Point Temperature on Cathode side (Tsp)] + [Input Wattage (W) * Heat Resistance from Dice to 1st Measuring Point (Rjsp) given by manufacturer]), or more simply. **Tj = Tsp + W*Rjsp**

Class I, Division 2, Groups A, B, C and D; Class II, Division 1, Groups E, F and G; Class III; T4A, T5 or T6 (Class I, Div. 2), T4A (Class II, Div. 1), T4A (Class I, Div 2 / Class II, Div. 1 Simultaneous Exposure); Type 4X; Type 6P;; IPX6; IPX7

- LED luminaires for use in hazardous locations, Series LAL, LALC, LALP, LALCP, LALPP, WLAL, WLALC, WLALP, WLALCP, and WLALPP rated 120-480 VAC, 50/60 Hz or 100-250 VDC or 12-24 VDC, 120 Watts max.
- LED emergency backup Lighting Fixtures, Series LALE, LALEPME, WLALE and WLALEPME rated 120-277, 50/60 Hz, 35 W max.

Notes:
The Series are followed by alphanumeric suffixes denoting electrical and mechanical variations.
1. Maximum Ambient 40°C, 55°C or 65°C as applicable (see below for specification)
2. Exit sign option is excluded from use with pendant or stanchion mount.

Operating Temperatures

	40C Ambient				55C Ambient				65C Ambient			
Wattage	Class I, Div. 2 Groups A,B,C & D; (Zone 2, Groups IIC, IIB, IIA)	Class II, Div. 1 Groups E F & G	Class I, Div. 2 & Class II, Div. 1 Simult. Exposure	Supply Wire Temp ° C	Class I, Div. 2 Groups A,B,C & D; (Zone 2, Groups IIC, IIB, IIA)	Class II, Div. 1 Groups E F & G	Class I, Div. 2 & Class II, Div. 1 Simult. Exposure	Supply Wire Temp ° C	Class I, Div. 2 Groups A,B,C & D; (Zone 2, Groups IIC, IIB, IIA)	Class II, Div. 1 Groups E F & G	Class I, Div. 2 & Class II, Div. 1 Simult. Exposure	Supply Wire Temp ° C
C50	T5	T4A	T4A	90	--	--	--	--	--	--	--	--
C40	T5	T4A	T4A	75	T5	T4A	T4A	90	--	--	--	--
C40	T5	T4A	T4A	75	T5	T4A	T4A	90	--	--	--	--
C35	T5	T4A	T4A	75	T4A	T4A	T4A	90	--	--	--	--
C30	T5	T4A	T4A	75	T4A	T4A	T4A	90	--	--	--	--
C25	T5	T4A	T4A	75	T4A	T4A	T4A	90	--	--	--	--
C23	T5	T4A	T4A	75	T5	T4A	T4A	90	--	--	--	--
C20	T5	T4A	T4A	75	T5	T4A	T4A	90	--	--	--	--
C18	T5	T4A	T4A	75	T4A	T4A	T4A	90	--	--	--	--
C15	T5	T4A	T4A	75	T4A	T4A	T4A	90	--	--	--	--
120	T6	T4A	T4A	75	T5	T4A	T4A	90	--	--	--	--
75	T6	T4A	T4A	75	T5	T4A	T4A	90	--	--	--	--
50	T6	T4A	T4A	75	T5	T4A	T4A	90	--	--	--	--
39	T6	T4A	T4A	75	T5	T4A	T4A	90	--	--	--	--
80	T6	T4A	T4A	75	T5	T4A	T4A	90	--	--	--	--
55	T6	T4A	T4A	75	T5	T4A	T4A	90	T5	T4A	T4A	90
34	T6	T4A	T4A	75	T5	T4A	T4A	90	T5	T4A	T4A	90
27	T6	T4A	T4A	75	T6	T4A	T4A	75	T5	T4A	T4A	90
60	T6	T4A	T4A	75	T5	T4A	T4A	90	--	--	--	--
40	T6	T4A	T4A	75	T5	T4A	T4A	90	--	--	--	--
26	T6	T4A	T4A	75	T6	T4A	T4A	75	T5	T4A	T4A	90
19	T6	T4A	T4A	75	T6	T4A	T4A	75	T5	T4A	T4A	90
45	T6	T4A	T4A	75	T5	T4A	T4A	90	T5	T4A	T4A	90
28	T6	T4A	T4A	75	T6	T4A	T4A	75	T5	T4A	T4A	90
18	T6	T4A	T4A	75	T6	T4A	T4A	75	T5	T4A	T4A	90
13	T6	T4A	T4A	75	T6	T4A	T4A	75	T5	T4A	T4A	90

Class I, Division 1, Groups D; Class II, Division 1, Groups E, F and G; Class III; Wet Locations

- Cat. Nos. EZRA-12, EACH-12, and EACH-16 Cover Adapter for use with specified fixture fittings in conjunction with KILLARK Series EZ, EZL, EMS and EBF fixtures; may be supplied with either Globe or Reflector.

Note: KILLARK EZRA-12, EACH-12, and EACH-16 Adaptors are for use on certified Crouse Hinds Mounting covers Cat. Nos. GUFX-26, EV-22 or EV97 in conjunction with CSA certified Series EZ, EZL, EMS and EBF fixture fittings.
Class I, Division 1, Groups C and D; Class II, Division 1, Groups E, F and G; Class III; Wet Locations

- Cat. Nos. CAAP-C2 for use with specified fixture fittings in conjunction with KILLARK Series EZ, EZL, EMS and EBF fixtures; may be supplied with either Globe or Reflector.

Note: KILLARK EAAP-C2 Series fixture Adaptors are for use on certified Appleton Fixture Mounting Covers Cat. Nos. CAP-75, CAP-100, CAC-75, CAC-100, CALB-75, CALB-100 or CAS-150 in conjunction with CSA Certified EZ, EZL, EMS and EBF fixture fittings.

Class I, Division 1, Groups B, C and D; Class II, Division 1, Groups E, F and G; Class III; T6 (Class I, Div. 1), T5 or T6 (Class II, Div. 1); Type 3, 4 and 4X, IP66; Marine

- LED luminaires for use in hazardous locations, Series LTL, rated 480 VAC max, 125 Watts max, 50/60Hz.

Notes:

Series Cat. No. LTL is followed by alphanumeric suffixes denoting electrical and mechanical variations.
1. Ambient 40 and 55C where applicable.

Class I, Division 2, Groups A, B, C and D; Class I, Zone 2, Groups IIC, IIB, IIA; T3C, T4A, T4,or T5; T3*;
Class II, Division 1, Groups E, F and G; T3C, T3C*;
Class III;
Encl. Type 4X; IP66

- LED luminaires for use in hazardous locations, Series KFLX, rated 480 VAC max, 560 Watts max, 50/60Hz.

Notes:
1. Series Cat. No. KFLX is followed by alphanumeric suffixes denoting electrical and mechanical variations. (See Nomenclature breakdown below.)
2. Ambient 40C, 55C and 65C where applicable
3. "*" T3C (Class I, Div 2 / Class II, Div. 1 Simultaneous Exposure)

Contact an Expert

We're always here to help. Let's talk.

We're here to answer your questions and help you get started right away. Call or send us a message anytime.

Contact Us (https://www.csagroup.org/contact)

CSA GROUP (https://www.csagroup.org)

FAQs (/faq/)

CSA OnDemand (http://store.csagroup.org/ondemand/s/?language=en_US)

Informs & Notices (/informs-notices/)

Submit an Incident Report (/submit-a-report/)

Agreement on Acceptance of Components (/agreement-acceptance-components/)

CSA Communities (http://community.csagroup.org/ForumsHome?reference=%2fIndex.jspa)

Product Alerts & Recalls (/product-alerts-recalls/)

Report Suspect Counterfeit Marks (/testing-certification/marks-labels/brand-protection/reporting-suspect-counterfeit-marks)

Resources & Insights (/resources-insights/)

Standards Research (/standards/standards-research/)

CSA Group Product Listing (/testing-certification/product-listing/)

Sign up for our Newsletter (https://www.csagroup.org/newsletter/)

(https://www.facebook.com/CSAGroup) (https://www.linkedin.com/company/csa-group) (https://twitter.com/CSAGroup) (https://www.youtube.com/user/CSAstandards)

© 2020 CSA Group (https://www.csagroup.org/)

Legal (https://www.csagroup.org/legal/) Privacy Policy (https://www.csagroup.org/legal/privacy-policy/) Evidence of Insurance (https://www.csagroup.org/legal/evidence-of-insurance/)

HSSE Policy (https://www.csagroup.org/hsse-policy/) Accreditation (https://www.csagroup.org/accreditation/) Annual Report (https://www.csagroup.org/annual-report/) Accessibility (https://www.csagroup.org/accessibility/)

Certification Record

Contact Us | Export (https://www.csagroup.org/)

Back to Product List (https://www.csagroup.org/testing-certification/product-listing)

CUSTOMER	CLASS	FILE NUMBER
Killark, Div of Hubbell Inc. (Delaware) 2112 Fenton Logistics Park Blvd, Fenton Missouri United States 63026	3428-03 \ Class/Index 3428-01 FIXTURES AND FITTINGS-For Hazardous Locations	011713_C_000

Class I, Groups C and D; Class II, Groups E, F and G; Class III;
(Temperature Coded), CSA Encl. 3 and 4 (component packaged):

- Series "HZ" integral ballast with or without aux. quartz lamp 100 or 150W, (for Div 1 only) 480V max, 60Hz, pendant ceiling, bracket, bolt-head or stanchion mount, max 400W high pressure sodium; 250 and 400W mercury vapour or metal halide. Suffix letters and digits following Series "HZ" denote lamp type, wattage, voltage, guard option, mounting, conduit, globe and aux. lamp options.
- Temperature coded as follows: HPS without quartz lamp (T2D), with quartz lamp (T2D) 200 and 400W, MH and MV, without quartz lamp (T3A), with quartz lamp (T2D).

Class I, Groups C and D; Class II, Groups E, F and G; Class III; (Temperature Coded): CSA Encl 3, 4, 4X:
Class I, Division 2, Groups B, C and D; Class II, Division 2, Groups E, F and G; Class III; CSA Encl 3, 4, 4X:

- Series EZ luminaires, mercury vapour (MV), metal halide (MH) or high pressure sodium (HPS) and EZL - LED, 190W max; 50/60 Hz, 480 VAC max or 250VDC max; lamp wattage 400 W max; 60 Hz, 600 V max.

Note: Suffixes letters/numerals denote Lamp Type, Lamp Ratings, Voltage, Mounting and Options.
Temperature coded as follows:

Cat No	Lamp W	Type+	Rated Ambient C	Class I Div. 1 Groups	Suitable For Simultaneous Use In Class I Groups C, D and Class II, Groups
*EZS50	50	HPS	40	C,D 120(T4A)	E,F,G 160 (T3C)
EZS50	50	HPS	55	C,D 120(T4A)	E,F,G 160 (T3C)
EZS50	50	HPS	65	C,D 120(T4A)	E,F,G 165 (T3B)
*EZS07	70	HPS	40	C,D 120(T4A)	E,F,G 160 (T3C)
EZS07	70	HPS	55	C,D 120(T4A)	E,F,G 160 (T3C)
EZS07	70	HPS	65	C,D 120(T4A)	E,F,G 165 (T3B)
*EZS10	100	HPS	40	C,D 120(T4A)	E,F,G 160 (T3C)
EZS10	100	HPS	55	C,D 120(T4A)	E,F,G 160 (T3C)
EZS10	100	HPS	65	C,D 120(T4A)	E,F,G 165 (T3B)
EZS15	150	HPS	40	C,D 120(T4A)	E,F,G 160 (T3C)
EZS15	150	HPS	55	C,D 120(T4A)	E,F,G 160 (T3C)
EZS15	150	HPS	65	C,D 135(T4)	E,F,G 165 (T3B)
EZS20	200	HPS	40	C,D 160(T3C)	E,F 200 (T3)
EZS20	200	HPS	55	C,D 160(T3C)	-
EZS25	250	HPS	40	C,D 160(T3C)	E,F 200 (T3)
EZS25	250	HPS	55	C,D 160(T3C)	-
EZS40	400	HPS	40	C,D 160(T3C)	-
*EZM10	100	MV	40	C,D 135(T4)	E,F,G 160 (T3C)
EZM10	100	MV	55	C,D 135(T4)	E,F,G 160 (T3C)
EZM17	175	MV	40	C,D 135(T4)	E,F,G 160 (T3C)
EZM17	175	MV	55	C,D 135(T4)	E,F,G 160 (T3C)
EZM25	250	MV	40	C,D 160(T3C)	-
EZM40	400	MV	40	C,D 180(T3A)	-
*EZH07	70	MH	40	C,D 120(T4A)	E,F,G 120 (T4A)
EZH07	70	MH	55	C,D 120(T4A)	E,F,G 135 (T4)
EZH07	70	MH	65	C,D 120(T4A)	E,F,G 160 (T3C)
*EZH10	100	MH	40	C,D 120(T4A)	E,F,G 120 (T4A)
EZH10	100	MH	55	C,D 120(T4A)	E,F,G 135 (T4)
EZH10	100	MH	65	C,D 120(T4A)	E,F,G 160 (T3C)
EZH17	175	MH	40	C,D 135(T4)	E,F,G 160 (T3C)
EZH17	175	MH	55	C,D 135(T4)	E,F,G 160 (T3C)
EZH25	250	MH	40	C,D 160(T3C)	-
EZH25	250	MH	55	C,D 160(T3C)	-
EZH40	400	MH	40	C,D 180(T3A)	-

Notes:
1. *Fixtures are suitable for locations having deposits of readily combustible paint residues.
2. Temperature coded for Series EZ fixture all mounts except trunnion.

Cat No	Type W	Type	Ambient	Class I Div. 1 Groups
EZS50T	50	HPS	40	C, D, 135 (T4)
EZS50T	50	HPS	55	C, D, 160 (T3C
EZS07T	70	HPS	40	C, D, 135 (T4)
EZS07T	70	HPS	55	C, D, 160 (T3C
EZS10T	100	HPS	40	C, D, 135 (T4)
EZS10T	100	HPS	55	C, D, 160 (T3C
EZS15T	150	HPS	40	C, D, 135 (T4)
EZS15T	150	HPS	55	C, D, 160 (T3C
EZS20T	200	HPS	40	C, D, 160 (T3C
EZS25T	250	HPS	40	C, D, 160 (T3C
EZS40T	400	HPS	40	C, D, 200 (T3)
EZM10T	100	MV	40	C, D, 165 (T3B
EZM10T	100	MV	55	C, D, 180 (T3A
EZM17T	175	MV	40	C, D, 165 (T3B
EZM17T	175	MV	55	C, D, 180 (T3A
EZM25T	250	MV	40	C, D, 180 (T3A
EZM40T	400	MV	40	C, D, 215 (T2D
EZH07T	70	MH	40	C, D, 135 (T4)
EZH07T	70	MH	55	C, D, 135 (T4)
EZH07T	70	MH	65	C, D, 135 (T4)
EZH10T	100	MH	40	C, D, 135 (T4)
EZH10T	100	MH	55	C, D, 135 (T4)
EZH10T	100	MH	65	C, D, 135 (T4)
EZH17T	175	MH	40	C, D, 165 (T3B
EZH17T	175	MH	55	C, D, 180 (T3A
EZH25T	250	MH	40	C, D, 180 (T3A
EZH40T	400	MH	40	C, D, 215 (T2D

- Operating Temperature, C (Operating Temperature Code) For Series EZ Fixtures with auxiliary quartz lamp option all mounts except trunnion.

Suitable For

Cat No	Lamp W	Type+	Ambient C	Class I, Div1, Grps.	Simultaneous Use In Class I, Grps. C, D and Class II, Groups
EZS05	50	HPS	40	C,D 135(T4)	E,F,G 160 (T3B)
EZS07	70	HPS	40	C,D 135(T4)	E,F,G 160 (T3B)
EZS10	100	HPS	40	C,D 135(T4)	E,F,G 160 (T3B)
EZS15	150	HPS	40	C,D 135(T4)	E,F,G 160 (T3B)
EZS20	200	HPS	40	C,D 160(T3C)	E,F 200 (T3)
EZS25	250	HPS	40	C,D 160(T3C)	E,F 200 (T3)
EZM10	100	MV	40	C,D 160(T3C)	E,F 180 (T3A)
EZM17	175	MV	40	C,D 160(T3C)	E,F 180 (T3A)
EZM25	250	MV	40	C,D 160(T3C)	-
EZH17	175	MH	40	C,D 160(T3C)	E,F 180 (T3A)
EZH25	250	MH	40	C,D 160(T3C)	-
EZS40	400	HPS	40	C,D 160(T3C)	-
EZM40	400	MV	40	C,D 180(T3Z)	-
EZH40	400	MH	40	C,D 180(T3A)	-
EZL040	40	LED	40	C, D 73 (T6)	E, F, G 160 (T3C)
EZL050	50	LED	40	C, D 73 (T6)	E, F, G 160 (T3C)
EZL055	55	LED	40	C, D 73 (T6)	E, F, G 160 (T3C)
EZL065	65	LED	40	C, D 73 (T6)	E, F, G 160 (T3C)
EZL070	70	LED	40	C, D 73 (T6)	E, F, G 160 (T3C)
EZL080	80	LED	40	C, D 73 (T6)	E, F, G 160 (T3C)
EZL090	90	LED	40	C, D 73 (T6)	E, F, G 160 (T3C)
EZL095	95	LED	40	C, D 73 (T6)	E, F, G 160 (T3C)
EZL100	100	LED	40	C, D 73 (T6)	E, F, G 160 (T3C)
EZL125	125	LED	40	C, D 73 (T6)	E, F, G 160 (T3C)
EZL135	135	LED	40	C, D 88 (T5)	E, F, G 160 (T3C)
EZL150	150	LED	40	C, D 88 (T5)	E, F, G 160 (T3C)
EZL190	190	LED	40	C, D 88 (T5)	E, F, G 160 (T3C)
EZL040	40	LED	55	C, D 81 (T6)	E, F, G 160 (T3C)
EZL050	50	LED	55	C, D 81 (T6)	E, F, G 160 (T3C)
EZL055	55	LED	55	C, D 81(T6)	E, F, G 160 (T3C)
EZL065	65	LED	55	C, D 81 (T6)	E, F, G 160 (T3C)
EZL070	70	LED	55	C, D 81 (T6)	E, F, G 160 (T3C)
EZL080	80	LED	55	C, D 81(T6)	E, F, G 160 (T3C)
EZL090	90	LED	55	C, D 81 (T6)	E, F, G 160 (T3C)
EZL095	95	LED	55	C, D 81 (T6)	E, F, G 160 (T3C)
EZL100	100	LED	55	C, D 81 (T6)	E, F, G 160 (T3C)
EZL125	125	LED	55	C, D 81 (T6)	E, F, G 160 (T3C)
EZL040	40	LED	65	C, D 91 (T5)	E, F, G 160 (T3C)
EZL050	50	LED	65	C, D 91 (T5)	E, F, G 160 (T3C)
EZL055	55	LED	65	C, D 91 (T5)	E, F, G 160 (T3C)
EZL065	65	LED	65	C, D 91 (T5)	E, F, G 160 (T3C)
EZL070	70	LED	65	C, D 91 (T5)	E, F, G 160 (T3C)
EZL080	80	LED	65	C, D 91 (T5)	E, F, G 160 (T3C)
EZL090	90	LED	65	C, D 91 (T5)	E, F, G 160 (T3C)
EZL095	95	LED	65	C, D 91 (T5)	E, F, G 160 (T3C)
EZL100	100	LED	65	C, D 91 (T5)	E, F, G 160 (T3C)
EZL125	125	LED	66	C, D 91 (T5)	E, F, G 160 (T3C)
EZL040	40	LED	40	C, D 73 (T6)	E, F, G 160 (T3C)
EZL050	50	LED	40	C, D 73 (T6)	E, F, G 160 (T3C)
EZL055	55	LED	40	C, D 73 (T6)	E, F, G 160 (T3C)
EZL065	65	LED	40	C, D 73 (T6)	E, F, G 160 (T3C)
EZL070	70	LED	40	C, D 73 (T6)	E, F, G 160 (T3C)
EZL080	80	LED	40	C, D 73 (T6)	E, F, G 160 (T3C)
EZL090	90	LED	40	C, D 73 (T6)	E, F, G 160 (T3C)
EZL095	95	LED	40	C, D 73 (T6)	E, F, G 160 (T3C)
EZL100	100	LED	40	C, D 73 (T6)	E, F, G 160 (T3C)
EZL125	125	LED	40	C, D 73 (T6)	E, F, G 160 (T3C)
EZL135	135	LED	40	C, D 88 (T5)	E, F, G 160 (T3C)
EZL150	150	LED	40	C, D 88 (T5)	E, F, G 160 (T3C)
EZL190	190	LED	40	C, D 88 (T5)	E, F, G 160 (T3C)
EZL040	40	LED	55	C, D 81 (T6)	E, F, G 160 (T3C)
EZL050	50	LED	55	C, D 81 (T6)	E, F, G 160 (T3C

Notes:
1. *Fixtures for suitable for locations having deposits of readily combustible paint residues.
2. Temperature coded for Series EZ fixture all mounts except trunnion
3. LED 120VAC 150W & 190 W ratings are only for use in ambient not exceeding 40C

Class I, Groups C and D; Class II, Groups E, F and G; Class III, (Temperature Coded); CSA Encl 3, 4, 4X:
Class I, Division 2, Groups B, C and D; Class II, Division 2, Groups E, F and G; Class III; CSA Encl 3, 4, 4X:
- Incandescent luminaires Series EML rated 250V ac (max) 60Hz 300W (max); fluorescent luminaires Series EBF, rated 277V ac (max) 60Hz, 26W (max); component packaged, factory sealed, temperature coded:
- Operating Temperature, Deg C Operating Temperature Code

Cat No	Lamp Wattage	Type	Rated Ambient Deg C	Class I,Div 1 Group	
EML	300	PS-30	40	C & D	160C, T3C
EML	300	PS-25	40	C & D	200C, T3
EML	200	PS-25	40	C & D	160C, T3C
EML	200	PS-30	40	C & D	160C, T3C
EML	150	PS-25	40	C & D	135C, T4
EML	200	A-23	40	C & D	160C, T3C
EML	150	A-23	40	C & D	135C, T4
EML	100	A-23	40	C & D	120C, T4A
EML	150	A-21	40	C & D	135C, T4
EML	100	A-21	40	C & D	120C, T4A
EML	100	A-19	40	C & D	120C, T4A
EML	60	A-19	40	C & D	85C, T6
EBF	26	PL-13	40	C & D	85C, T6
EBF	13	PL-13	40	C & D	85C, T6

Cat No	Lamp Wattage	Type	Rated Ambient Deg C	Class I,L Group	Div 1 Globe	When Used With Globe Reflectors
EML	300	PS-25	40	-	-	-
EML	200	PS-25	40	-	-	-
EML	150	PS-25	40	-	-	-
EML	200	A-23	40	-	-	-
EML	150	A-23	40	E, F	200C, T3	180C, T3A
EML	100	A-23	40	E, F	180C, T3A	180C, T3A
EML	150	A-21	40	E, F	-	200C, T3
EML	100	A-21	40	E, F	180C, T3A	180C, T3A
EML	100	A-19	40	E, F	180C, T3A	180C, T3A
EML	60	A-19	40	E, F, G	160C, T3C	160C, T3C
EBF	26	PL-13	40	E, F, G	85C, T6	85C, T
EBF	13	PL-13	40	E, F, G	85C, T6	85C, T

Cat No	Lamp Wattage	Type	Rated Ambient Deg C	Class I, Group	Div 1 Globe	Class II, Group	Div 1 Globe	When Used With Globe w/Reflector
EMS	150	S55	40	C&D	120C, T4A	E,F	180C, T3A	180C, T3A

/https://www.csagroup.org/ Standards About Careers Store Contact English fr

					100C,	E,F,G	165C,	165C,
					T5		T3B	T3B
EMS	70	S62	40	C&D	85C,	E,F,G	120V,	120C,
					T6		T4A	T4A
EMS	50	S68	40	C&D	85C,	E,F,G	120V,	120C,
					T6		T4A	T4A
EMS	50	S68	40	C&D	85C,	E,F,G	120C,	120V,
					T6		T4A	T4A
EMS	35	S76	40	C&D	85C,	E,F,G	120C,	120C,
					T6		T4A	T4A
EMM	100	H38	40	C&D	120C,	E,F,G	160C,	160C,
					T4A		T3C	T3C
EMM	75	H43	40	C&D	100C,	E,F,G	135C,	135C,
					T5		T4	T4
EMM	50	H48	40	C&D	85C,	E,F,G	135C,	135C,
					T6		T4	T4
EMH	100	M90	40	C&D	120C,	E,F,G	160C,	160C,
					T4A		T3C	T3C
EMH	70	M85	40	C&D	100C,	E,F,G	135C,	135C,
					T5		T4	T4
EMH	50	-	40	C&D	85C,	E,F,G	135C,	135C,
					T6		T4	T4

Note: The Cat No. is followed by alphanumeric suffixes denoting electrical and mechanical variations.
Class I, Groups C and D; Class II, Groups E, F and G; Class III (Temperature Coded):
- H*100 Series, with or without guard, with or without reflectors, rated 150W, 250V max.
- H*125 Series, with or without reflectors, rated 200W, 250V max.
- H*150 Series without reflectors, rated 200W max; with or without reflectors, with clear globe only with 160W - 120V self ballasted mercury vapour lamp (SU67).
- H*200 Series, with or without reflectors, rated 200W, 250V max; with or without reflectors with 160W - 120V self ballasted mercury vapour lamp (SU67).
- H*250 Series, with or without reflectors, 175W mercury vapour or metal halide lamps with remote ballast.
- H*500 Series, with or without reflectors 300W, 250V max.

Class I, Groups C and D; Class II, Groups E, F and G; Class III:
- Series HZ1, HZ3 and HZ7, 1-100, 175 and 1-250W mercury-vapour or metal halide lamps max respectively, 60Hz, 600V max. Suffix letters denote mounting arrangements, with or without globe guard, etc. Suffix numerals denote primary voltage.
- Series HZM-S, -0, 1-100W and 1-175W mercury-vapour lamp max respectively, 60Hz, 277V max, followed by a suffix numeral to denote primary voltage, followed by "G" or "G1" to indicate with or without castguard followed by letters and numeral to indicate mounting arrangement and conduit .
- Warning Strobe Light, Series SH, 120V, 60Hz, 0.3A, followed by X, P, B, N or D with or without G, followed by 1 or 2, followed by 23, followed by A, B, C, G or R.
- Series HFXE: Fluorescent Fixtures, with Emergency back-up; Cat No HFXE, followed by 1 or 2, followed by 407, 557, 1711, 265, 430, 460 or 800; followed by L 4 or 30; followed by 2, 3 or 4; may be followed by F, FF or WL. Rated 347VAC max, 800mA max. Temperature Coded T6, T5 or T4A (where applicable)

Class I, Groups C and D; Class II, Groups E, F and G; Class III; CSA Encl. Types 3 and 4X; Factory Sealed:
- Warning strobe light rated 240V ac max, 60Hz, and 74V dc max. Series ESX followed by A, B, C, G, or R, followed by 1274, 120A, or 240A; followed by A2, A3, X2, X3, B2, or B3; may be followed by G.
- Emergency lighting equipment, Series EBB followed by 32010 followed by A2, A3, X2, X3, B2 or B3; may be followed by G; rated 277V ac max, 60Hz, 3 lamp each rated 20W.

Class I, Group D; Class II, Groups E, F and G; Class III; Encl Types 3 and 4; Factory Sealed:
- Warning strobe light rated 240V ac max, 60Hz, and 74V dc max. Series ESX followed by A, B, C, G, or R; followed by 1274, 120A, or 240A; followed by D4, or D6; may be followed by G.

Class I, Groups C and D; Class II, Groups E and F (Temperature Coded):
- H*150 Series with or without reflector with prismatic glassware with 160W, 120V self ballasted mercury vapour lamp (SU67).
- H*200 Series with or without reflectors with clear globe only; without reflectors with prismatic globe 300W, 250V max.
- H*250 Series without reflectors, rated 250W mercury vapour max with remote ballast. Class I, Groups C and D (Temperature Coded);
- H*125 Series without reflectors, rated 300W, 250V max.
- H*150 Series with or without reflectors, rated 200W, 250V max; without reflectors rated 300W, 250V max.
- H*200 Series with or without reflector with prismatic glassware rated 300W, 250V max.
- H*250 Series with or without reflectors rated 250W mercury vapour with remote ballast.
- H*400 Series without reflectors rated 400W mercury vapour or metal halide with remote ballast.

Class I, Group D (Temperature Coded):
- H*125 Series with or without reflectors rated 300W, 250V max.
- H*150 Series with or without reflectors rated 300W, 250V max.
- H*250 Series with or without reflector with 300W, 120V, self ballasted mercury vapour lamp (SU67).
- H*400 Series with or without reflectors with 400W mercury vapour or metal halide lamp with remote ballast; rated 500W, 170V, self ballasted mercury vapour (SU67).
- H500 Series with or without reflectors, rated 500W, 250V max.

*The following prefix letters and numerals may be inserted as qualified above into the Cat No as follows: B, CX, D, N, P or X denoting mounting arrangements; G denoting guard, A, D, S or SD denoting reflectors, 1, 2, 3 or 4 denoting conduit . Suffix letters "F" following the series number denotes optional prismatic glassware.
Class I, Div. 2, Groups A, B, C and D; Class II, Div. 2, Groups E, F and G;
Class III, Div. 2; CSA Encl 3, 4 and 5:
- MB Series, HID luminaires rated 480V max, 35W to 150W with suffixes to denote lamp types, lamp wattage, input voltage, optical options and mounting covers.

Lamp Type	Lamp Wattage	Temperature Code	Ambient Temperature
HPS	35W	T3 (200)	40C
		T2D (215)	55 and 65C
HPS	50W	T2D (215)	40C
		T2C (230)	55 and 65C
MV	50W	T2B (260)	40 and 55C
HPS	70W	T2B (260)	40C
MV	75W	T1 (325)	40C
HPS	100W	T2A (280)	40C
MV	100W	T1 (450)	40C
HPS	150W	T1 (325) (*1)	40C
		T1 (360) (*2)	40C

Note: *1 - Globe or refractor; *2 - Globe with dome or angle reflector.
- MBF Series, fluorescent luminaires, 120V, 277V or 347; 13W, 26W or 39W; 1, 2 or 3 lamp configurations with suffixes to denote wattage, input voltage, optical options and mounting covers.

Input Voltage	No of Lamps	Wattage	Temperature Code	Ambient Temperature
120V	1	13W	T3A (180)	40C
	2	26W	T3A (180)	40C
	3	39W	T3 (200)	25C
277V	1	13W	T3C (160)	40C
	2	26W	T3C (160)	40C
347	1	26W	T6 (85)	40C

Class I, Division 2, Groups A, B, C and D; Class II, Division 1, Groups E, F and G; Class III; CSA Encl. Types 3 and 4; Temperature Coded T3C, T3B, T4, T4A, T5 or T6 (where applicable):
Series DBF, Fluorescent Lighting Fixtures Rated 480 VAC max, 800 mA max, 50 or 60Hz. Series Cat. Nos: DBF32A2B (Two Lamps), DBF32A3B (Three Lamps), rated 480 VAC max, 265 mA; DBF40A2B (Two Lamps), DBF40A3B (Three Lamps), rated 347 V ac max, 430 mA, DBF60A2B (Two Lamps), DBF60A3B (Three Lamps), rated 347 V ac max, 800 mA, DBF54A2B (two lamps) rated 480VAC max, DBF54A3B (three lamps) 480VAC max. 460mA; DBF28A2B (two lamps) , DBF28A2B (three lamps) rated 277 VAC max, 170 mA, DBF95A4B (four bax lamps) 347VAC max.

Series DBFE, Fluorescent Lighting Fixtures with emergency back-up Rated 347VAC max., 800mA max, 50 or 60 Hz. Series Cat. Nos., DBFE128A2B (Two lamps), DBFE128A3B (Three lamps), rated 347VAC max.170 mA; DBFE132A2B (Two lamps), DBFE132A3B (Three lamps), DBFE232A2B (Two lamps), DBFE232A3B(Three lamps) rated 347VAC max. 275 mA ; DBFE240A2B (Two lamps), DBFE240A3B (Three lamps) rated 277VAC max. 430 mA; DBFE154A2B (Two lamps), BFE154A3B (Three lamps) 277VAC max. 460 mA, DBFE160A2B (two lamps), DBFE160A3B (Three lamps) 277VAC max. 800mA; DBFEE195A4B (Four lamps) 277VAC max. 625 mA.
Class II, Groups E, F and G; Class III, CSA Encl 3, 4, 5:
- MB Series, HID luminaires rated 480V max, 35W to 150W with suffixes to denote lamp types, lamp wattage, input voltage, optical options and mounting covers.

Lamp Type	Lamp Wattage	Optics/Accessories (1)	Ambient Temperature
HPS	35	G, G/D, G/A	40, 55, 65C
HPS	50	G, G/D, G/A	40, 55, 65C
MV	50	G, G/D, G/A	40, 55C
HPS	70	G, G/D, G/A	40C
MV	75	G, G/D, G/A	40C
HPS MV	100	G, G/D, G/A	40C
HPS	150	G, G/D, G/A	40C

- MBF Series, fluorescent luminaires, 120V or 277V; 13W, 26W or 39W, 1, 2 or 3 lamp configurations with suffixes to denote wattage, input voltage, optical options and mounting covers.

Input Voltage	No of Lamps Wattage	Optics/ Accessories (1)	Ambient Temperature
120V	1 lamp 13W	G, G/D, G/A	40C
	2 lamps 26W	G, G/D, G/A	40C
	3 lamps 39W	G, G/D, G/A	25C
277V	1 lamp 13W	G, G/D, G/A	40C
	2 lamps 26W	G, G/D, G/A	40C

Note: (1) G - Globe; G/D - Globe with Dome reflector; G/A - Globe with Angle reflector.
Class II, Groups E, F and G, Class III:
- Series DL, and DV, 300W max, 300V ac, Cat Nos DL or DV with suffix A, B, BD, Btn, Bs, C, CX, D, H, L, M, S, T or X for type of mounting; with suffix 1, 2 or 3 for conduit connection ; with suffix 10, 20 or 50 for max lamp wattage; with suffix A, G, R, S or SD for external accessories.

Class II, Groups E and F:
- Series DL and DV, 500W max, 300V ac, as above. Asbestos-covered wire should be used in making connections.

Class I, Div 2; Class II; Class III; CSA Encl. 4 (Temperature Coded):
- VM Series, HID luminaires, integrally or remotely ballasted, rated 600V max, 50W to 400W, with suffixes to denote lamp types, mounting covers, lamp watts, input volts and optical options.

Lamp Type	Lamp Watts	Ambient	T-Code Globe	T-Code Globe W Reflector	T-Code 8 in Refractor	T-Code 12 in Refractor	Class II, Grps. E, F	Class II, Gr. G	Class III
HPS	50	40	T2B	T2B	T2	T2B	*	*	*
HPS	50	55	T3A	T3A	T3A	T3A	*	*	*
HPS	50	65	T3	T3	T2A	T3	*	*	*
HPS	70	40	T3	T3	T3A	T3A	*	*	*
HPS	70	55	T3	T3	T3	T2A	*	*	*
HPS	70	65	T2D	T2D	T3	T3	*	*	*
HPS	100	40	T3C	T2C	T2C	T3	*	*	*
HPS	100	55	T2C	T2C	T2C	T3	*	-	*
HPS	100	65	-	-	-	T2D	*	-	*
HPS	150	40	T2B	T2B	T2B	T2B	*	*	*
HPS	150	55	T2A	T2A	T2A	T2B	*	-	*
HPS	150	65	-	-	-	T2B	*	-	*
HPS	200	40	T2	T2	T2	T2	*	*	*
HPS	250	40	T1	T1	T1	T1	*	*	*
HPS	310	40	T1	T1	T1	T1	*	*	*
HPS	400	40	T2A	T2A	T2A	T2A	*	*	*
MV	100	40	T2B	T2B	T2C	T2C	*	*	*
MV	100	55	T2B	T2B	T2B	T2B	*	-	*

Contact us Export Privacy Accessibility Terms

						T2B	T2B	*	-	*
						T2A	T2B	*	*	-
MV	175	55	T2	T2	T2A	T2A	*	-	-
MV	175	65				T2A	-	-	-
MV	250	40	T2	325	325	T2	*	*	*
MV	250	55	-	-	-	325	-	-	-
MV	400	40	T1	T1	T1	T1	*	-	-
MH	70	40	T3B	T3B	T3B	T3C	*	*	*
MH	70	55	T3A	T3A	T3A	T3C	*	-	*
MH	70	65	T3A	T3A	T3A	T3C	*	-	*
MH	100	40	T2D	T2D	T3	T3	*	*	*
MH	100	55	T2D	T2C	T2C	T3	*	-	*
MH	100	65	T2D	T2C	T2C	T3	*	-	*
MH	150	40	T2B	T2B	T2B	T3	*	*	*
MH	150	55	T2A	T2A	T2A	T2D	*	-	*
MH	150	65	-	-	-	T2D	-	*	-
MH	175	40	T2A	T2A	T2A	T2B	*	*	-
MH	175	55	T2	T2	T2A	T2B	*	-	-
MH	175	65	-	-	-	T2B	-	-	-
MH	250	40	325	325	T2	T2	*	*	*
MH	250	55	-	-	-	T2	-	-	-
MH	400	40	T1	T1	T1	T1	*	-	-

Notes:
1. * shows units Certified for the particular group.
2. - shows units not Certified for the particular group.
3. 250W, MH and MV, require 105C supply caution.
4. 400W units require 125C supply caution.

Class I, Div 2; CSA Encl 3:
- "SPL" Series Incandescent Lighting Fixtures Cat No SPL-13451 rated 300V/60Hz-300W.
- "SPL" Series Incandescent Lighting Fixtures Cat Nos SPL-13452 and SPL-13453 rated 300V/60Hz-500W.

Class I, Div 2, Groups A, B, C and D; (Temp Coded) Type 3, 4 (Component Packaged):
- Series "V", Incandescent lighting fixtures, Series Cat No VXFC, rated (300W, 300V) max; And, Cat. No VFX emergency lighting heads, Temperature Code T1, Encl Type 4, rated 240Vac, 20 W max.
- Incandescent lighting fixture Cat No SPL25927, rated 300V max, 100W max; maximum operating temperature 222¿½C @ 150¿½C ambient.

Notes:
1. Instruction sheets packed with each unit.
2. Units with Temp Code T1 or max operating temperature over 305C are not suitable for Class I, Div 2, Group A applications.
3. Series Cat No "V" is followed with alphanumeric suffixes denoting electrical and mechanical variations.

Class I, Groups C and D; Class II, Groups E, F and G; Class III; Encl 4:
- Fluorescent luminaires, Series HFX, rated 347V max, 60Hz, 110W max; with suffixes to denote lamp type, lamp wattage, input voltage and options:

Lamp Type	Lamp Rating	Temp Code ¿½ Class I	Temp Code ¿½ Class II
17W	17 W	T6	T4A - EFG
40T	40 W	T6	T4A - EFG
55T	55 W	T6	T4A - EFG
170	170 ma, 28 W	T6	T4A - EFG
265	265 mA, 32 W	T5	T4A - EFG
300	300 mA, 24 W	T6	T4A - EFG
430	430 mA, 40 W	T5	T4A - EFG
480	480 mA, 54 W	T6	T4A - EFG
800	800 mA, 60 W	T5	T4A - EFG
1500	1500 mA, 110 W	T5	T4A - EFG

- LED luminaries, Series HLLX, rated 480V max, 50 or 60 HZ, 170W max, with suffixes to denote, lamp wattage, input voltage and options:

Cat No	Fixture Wattage	Rated Ambient ¿½C	Temp Code Class I	Temp Code Class II
HLLX170	170	55	T6	T4A
HLLX22	170	55	T6	T4A
HLLX170	170	40	T6	T4A
HLLX22	170	40	T6	T4A
HLLX110	110	55	T6	T4A
HLLX15	110	55	T6	T4A
HLLX110	110	40	T6	T4A
HLLX15	110	40	T6	T4A
HLLX085	85	55	T6	T4A
HLLX11	85	55	T6	T4A
HLLX085	85	40	T6	T4A
HLLX11	85	40	T6	T4A
HLLX055	55	55	T6	T4A
HLLX7	55	55	T6	T4A
HLLX055	55	40	T6	T4A
HLLX7	55	40	T6	T4A
HLLX035	35	55	T6	T4A
HLLX6	35	55	T6	T4A
HLLX035	35	40	T6	T4A
HLLX6	35	40	T6	T4A
HLLX024	24	55	T6	T4A
HLLX4	24	55	T6	T4A
HLLX024	24	40	T6	T4A
HLLX	24	40	T6	T4A

Class I, Division 2, Groups A, B, C and D (Temperature Coded); Class II, Groups E, F, and G; Class III: Ex nR T4 or T3:
- KILLARK VM Low Series (08 ¿½ 250 W): 50, 70, 100, 150 and 250 W HPS; 100, 175 and 250 W MV; 175 and 250 W MH; 08 to 85W Induction; Model Number VM-XXXXXX, and VM High Series (200 ¿½ 400 W): 200, 250 and 400 W HPS; 250 and 400 W MV; 250 and 400 W MH luminaires; rated 600 V max; may be supplied with either Globe, Enclosed Reflector, or Refractor. For use with supply wiring rated 90¿½ C or higher.

Note:
(1) Suffixes denote: Lamp Type, Cover Type, Conduit Size, Lamp Wattage, Input Voltage and Optics.
(2) This Report may also be used as a supplement to LR 11713-34
(3) The voltage 208 V and 240V are not applicable for Canada (USA Only)

	Watts	Type	Code	Ambient
VM Low Series	70	HPS	(T4A)	40
	8-35	QL	T3C	40
	100	MV	(T3C)	40
	100	HPS	(T4A)	40
	150-55	HPS	(T3C)	40
	175	MH	(T3B)	40
	175	MV	(T3)	40
	250	MV	T1	40
	250	HPS	T2	40
VM High Series	250	HPS	(T3C)	40
	250	MV	(T3)	40
	250	MH	(T3A)	40
	400	HPS	(T3C)	40
	400	MH	(T3)	40
	400	MV	(T3)	40

Class I, Div 2, Groups A, B, C and D; Class II, Groups E, F and G; Class III; Type 3, 4 and 5; Ex nR IIC.
- MB series luminaires, 480V max, 60Hz, 150W max for mercury vapour, high pressure sodium and metal halide components packaged and temperature codied as follows:

MB HAZARDOUS LOCATION DATA

LAMP		RATED AMB C	CLASS I, DIV. 2, GROUPS A, B, C, D LAMP TEMPERATURES			CLASS II, DIV. I & 2, GROUPS E, F, G MAXIMUM SURFACE TEMPERATURES			CLASS III DIV. I & 2,			SUPPLY WIRE SUITABLE FOR ¿½C
TYPE	WATT		NO REFLEC	WITH REFLEC	WITH REFRAC	NO REFLEC	WITH REFLEC	WITH REFRAC	NO REFLEC	WITH REFLEC	WITH REFRAC	
	50	40	215C(T2D)	215C(T2D)	215C(T2D)	120C(T4A)	135C(T4)	120C(T4A)	YES	YES	YES	75
	50	55	230C(T2C)	230C(T2C)	230C(T2C)	135C(T4)	160C(T3C)	135C(T4)	YES	YES	YES	90
	50	65	230C(T2C)	230¿½C(T2C)	230¿½C(T2C)	160¿½C(T3C)	160¿½C(T3C)	160¿½C(T3C)	YES	YES	YES	90
HPS	70	40	260¿½C(T2B)	260¿½C(T2B)	230¿½C(T2C)	120¿½C(T4A)	120¿½C(T4)	120¿½C(T4A)	YES	YES	YES	75
	100	40	280¿½C(T2A)	280¿½C(T2A)	280¿½C(T2A)	160¿½C(T3C)	160¿½C(T3C)	160¿½C(T3C)	YES	YES	YES	90
	150	40	325¿½C(T1)	325¿½C(T1)	325¿½C(T1)	-	-	160¿½C(T3C)	NO	NO	YES	110
	150	40	325¿½C(T1)	325¿½C(T1)	325¿½C(T1)	180¿½C(T3A)	200¿½C(T3)	-	NO	NO	NO	110
	50	40	230¿½C(T2C)	230¿½C(T2C)	230¿½C(T2C)	160¿½C(T3C)	160¿½C(T3C)	160¿½C(T3C)	YES	YES	YES	90
MH	70	40	230¿½C(T2C)	230¿½C(T2C)	230¿½C(T2C)	160¿½C(T3C)	160¿½C(T3C)	160¿½C(T3C)	YES	YES	YES	90
	100	40	280¿½C(T2A)	280¿½C(T2A)	280¿½C(T2A)	160¿½C(T3C)	160¿½C(T3C)	160¿½C(T3C)	YES	YES	YES	85
	50	40	260¿½C(T2B)	260¿½C(T2B)	260¿½C(T2B)	160¿½C(T3C)	160¿½C(T3C)	160¿½C(T3C)	YES	YES	YES	90
MV	50	55	260¿½C(T2B)	260¿½C(T2B)	260¿½C(T2B)	160¿½C(T3C)	160¿½C(T3C)	160¿½C(T3C)	YES	YES	YES	90
	75	40	325¿½C(T1)	325¿½C(T1)	325¿½C(T1)	160¿½C(T3C)	160¿½C(T3C)	160¿½C(T3C)	YES	YES	YES	90
	100	40	450¿½C(T1)	450¿½C(T1)	450¿½C(T1)	160¿½C(T3C)	160¿½C(T3C)	160¿½C(T3C)	YES	YES	YES	110
QL	55	40	160¿½C(T3C)	160¿½C(T3C)	160¿½C(T3C)	135¿½C(T4)	135¿½C(T4)	135¿½C(T4)	YES	YES	YES	75

MB-NR Ex nR RESTRICTED BREATHING DATA – CLASS I, ZONE 2, IIC, IIB, IIA

LAMP WITH GLOBE			RATED AMBIENT ¿½C	GLOBE OR GLOBE WITH REFLECTOR UL/CSA	SUPPLY WIRE SUITABLE FOR ¿½C
SERIES	TYPE	WATTAGE		UL/CSA	
			40	T6	75
MBL	HPS	35 OR 50	55	T5	90
			65	T5	90
MBL	HPS	70	40	T5	75

						90
						110
M3H	MH	50	40		T5	90
M3H	MH	70	40		T5	90
M3H	MH	100	40		T4	90
M3K	MV	50	40		T5	90
			55		T5	110
M3K	MV	75	40		T4	90
M3K	MV	100	40		T4	110
M3K	QL	55	40		T4	75

Notes:

1. Includes both standard dome and angle reflectors.
2. Guard required for Class II, Division 1 and Class III applications.
3. Temperature Code based on luminaire with globe and guard only.
4. 150 watt HPS - Groups E, F only with or without reflector and Groups E, F and G with refractor.

Class I, Div 2, Groups A, B, C and D; Class II, Groups E, F and G; Class III; Type 3, 4 and 5: Ex nR IIC;

- M3 series luminaires, 480V max, 60Hz, for mercury vapour, high pressure sodium and metal halide component packaged and temperature coded as follows:

35W HPS - T3 (200) at 40 amb., T2D (215) at 55, 65 amb. T5 with Ex nR
50W HPS - T2D (235) at 40 amb., T2C (230) at 55, 65 amb. T4A with Ex nR
50W MV - T2B (260) at 40, 55 amb. T5 with Ex nR
70W HPS - T2B 260) at 40 amb. T4A with Ex nR
75W MV - T1 (325) at 40 amb. T4A with Ex nR
100W HPS - T2A (280) at 40 amb. T4A with Ex nR
100W MV - T1 (450) at 40 amb. T4A with Ex nR
150W HPS - T1 (325) at 40 amb., globe or refractor. T4 with Ex nR
- T1 (350) at 40 mab., globe with dome or angle reflector

Class I, Division 2, Groups A, B, C and D; Type 4X:

- KWP Series (Kiltark) / PGM2 Series (Hubbell), for 1-70W, -100W, -150W, -175W, HPS, MH or MHP lamps, 480V max, 60Hz. May be provided with suffixes PGPS (Clear Shield), PGWG (Wire Guard), PVLV (Glare Shield cut off visor). Suitable for wet locations. For 1 in 1 out through wire.

Temperature Codes:

Watts	Type	Ambient	Temp Code
35	HPS	40 C	T3
50	HPS	40 C	T2D
70	HPS	40 C	T2D
100	HPS	40 C	T2D
150	HPS	40 C	T2B
70	MH	40 C	T3
100	MH	40 C	T3
175	MH	40 C	T2B
150	MHP	40 C	T2B
175	MHP	40 C	T2B

Class I, Division 2, Groups A, B, C and D; Ex nA IIC; Type 4X; Class I, Zone 2, AEx nA IIC; Type 4X:

- KWP Series (Kiltark) / PGM2 Series (Hubbell), for 1-70W, -100W, -150W, -175W, HPS or MH lamp, 480v max, 60 Hz. May be provided with suffixes PGPS (Clear Shield), PGWG (Wire Guard), PVLV (Glare Shield cut off visor). Suitable for wet locations. For 1 in 1 out through wire.

Temperature Codes:

Watts	Type	Ambient	Temp Code
35	HPS	40 C	T3
50	HPS	40 C	T2D
70	HPS	40 C	T2D
100	HPS	40 C	T2D
150	HPS	40 C	T2B
70	MH	40 C	T3
100	MH	40 C	T3
175	MH	40 C	T2B

Class I, Division 2, Groups A, B, C and D Temperature Coded T5, T4A or T4; Type 4X:
KWPL Series, for 1-50W, -70W, -85W, -100W LED, 480v max, 50/60 Hz. May be provided with suffixes PGPS (Clear Shield), PGWG (Wire Guard), PVLV (Glare Shield cut off visor).
LED Temperature Codes:

Watts	Type	Ambient	Temp Code
50	LED	40C	T5
50	LED	55C	T4A
70	LED	40C	T4A
70	LED	55C	T4
85	LED	40C	T4A
85	LED	55C	T4
100	LED	40C	T4

-
-
-
-

Note: suffix may be added to the Catalogue number (Series KWP/KWPL) denoting mechanical variations not effecting certification.
Class I, Div. 1, Groups C and D; Class II, Div. 1, Groups E, F and G; Class III; Enclosure Types 3 and/or 4 (where applicable);Temperature Coded:
Emergency back-up lighting fixtures, Series EE:

- Series EE, followed by Q, followed by 26, 32, 42 or 00; followed by 26E, 32E or 42E; followed by 1, 4, 10 or 30, followed by A, B, X or D; followed by 2, 3, 4 or 5; followed by G or GG; may be followed by D, A, N4, R, E SU45 and/or SU103. Rated 277 VAC max, 42 W max.

Class I, Division 2, Groups A, B, C and D; Class II, Groups E, F, G; Enclosure Types 3 and/or 4 (where applicable).

- Emergency back-up lighting fixtures, Series VEB, followed by 26, 39 or 00; followed by 13E or 26E; followed by 1, 4 or 10; followed by A, B, C, D, S or X; followed by 2, 3, 4 or 5; followed by G or GG; may be followed by N4 and/or R.
- Emergency back-up lighting fixtures, Series VEQ, followed by 52, 64, 84 or 00; followed by 26E, 32E or 42E; followed by 30, followed by A, B, C, D, S or X; followed by 2, 3, 4 or 5; followed by G or GG; may be followed by F and/or N4 and/or R.

OPERATING TEMPERATURE, ½ C (OPERATING TEMPERATURE CODE)

Lamp				Class I, Div. 2 (When Used With)			Class II, Div. 1, (When Used With)			Class I, Div. 2, (When Used With)		
Cat.No.	Wattage	Type	Rated Ambient ½ C	Group	Globe	Globe with Reflector	Group	Globe	Globe with Reflector	Globe	Globe with Reflector	Supply Wire Suitable for ½ C
VEB	26	CF	40	A, B, C, D	180 (T3A)	180 (T3A)	E,F,G	85 (T6)	85 (T6)	200 (T3)	200 (T3)	85
DEB	26	CF	40	-	-	-	E,F,G	85 (T6)	85 (T6)	-	-	85
VEB	39	CF	40	A, B, C, D	180 (T3A)	180 (T3A)	E,F,G	85 (T6)	85 (T6)	200 (T3)	200 (T3)	85
DEB	39	CF	40	-	-	-	E,F,G	85 (T6)	85 (T6)	-	-	85
VEQ	52	CF	40	A, B, C, D	215 (T2D)	215 (T2D)	E,F,G	120 (T4A)	120 (T4A)	230 (T2C)	230 (T2C)	85
VEQ	64	CF	40	A, B, C, D	215 (T2D)	215 (T2D)	E,F,G	120 (T4A)	120 (T4A)	230 (T2C)	230 (T2C)	85
VEQ	84	CF	40	A, B, C, D	215 (T2D)	215 (T2D)	E,F,G	120 (T4A)	120 (T4A)	230 (T2C)	230 (T2C)	85

Class II, Groups E, F, G; Enclosure Types 3 and/or 4 (were applicable) Temperature Coded:

- Emergency back-up lighting fixtures, Series DE, followed by B, followed by 26, 39 or 00; followed by 13E or 26E; followed by 1, 4 or 10; followed by A, B, C, D, S or X; followed by 2, 3, 4 or 5; followed by G or GG, may be followed by N4 and/or R.

Class I, Div. 1, Groups C and D; Class II, Div. 1, Groups E, F and G; Class III; Enclosure Types 3, 4 and 4X.
Temperature Coded T6 (Class I, Groups C and D); T4 (Class II, Groups E, F & G):

- Fluorescent Fixture Series BQF, followed by 26, 32, 42, 52, 64 or 84; followed by 30, 19 or 24DC; followed by A, B, X or D; followed by 2, 3, 4 or 5; followed by G or GG; may be followed by D, A and/or N4; Rated 277 VAC max, 50/60 Hz, 84 W max; 24VDC, 60W max or 125VDC, 84W max.

Class I, Division 2, Groups A, B, C and D; Class II, Div. 2, Groups F and G; Class III, Div. 2. (Enclosure Types 3 and/or 4 (were applicable); Temperature Coded:
Emergency back-up lighting fixtures, Series DBFE:

- Nos. DBFE, followed by 1 or 2, followed by 40, followed by 1 or 4, followed by 2 or 3, may be followed by B1. for use with fluorescent tube lamps, 430 mA, 120 through 277 V ac, 50 or 60 Hz.
- Nos. DBFE, followed by 1 or 2, followed by 60, followed by 1 or 4, followed by 2 or 3, may be followed by EL, for use with fluorescent tube lamps, 800 mA, 120 through 277 V ac, 50 or 60 Hz.
- Nos. DBFE, followed by 1 or 2, followed by 32, followed by 1 or 4, followed by 2 or 3, may be followed by EL for use with fluorescent tube lamps, 265 mA, 120 through 277 V ac, 50 or 60 Hz.

Temperature Coded as tabulated below:
Operating Temperature Code

Cat No ++	No	MA	Type +	Rated Ambient, C	Class I, Div. 2, Groups A, B, C and D	Class II, Div. 2, Groups R and G and Class III
DBFEA4082C	2	430	F (T12)	40	T6	T6
DBFEA4083C	3	430	F (T12)	40	T5	T6
DBFEA6082C	2	800	F (T12)	40	T4A	T6
DBFEA6083C	3	800	F (T12)	40	T4	T6
DBFEA3282C	2	265	F (T8)	40	T6	T6
DBFEA3283C	3	265	F (T8)	40	T5	T6

+ DBFE = Emergency Fluorescent Fixture
A = One or Two emergency lamps
B = Designates Voltage; may be 1 (120V, 60Hz), or 4 (277V, 60Hz)
C = Designates optional EL (Electronic Ballast)
Class I, Div. 2, Groups A, B, C and D; Class II, Div. 1, Groups F and G; Class III; Temperature Coded*,
ExnA T3, T4, T5 or T6:

- Fluorescent Fixture for use in hazardous locations. Series LZ2N, followed by 17, 28, 32, 40, 44, 54, 55 or 60; followed by 1, 2, 3 or 4; followed by 01, 04, 06, 15, 30, 33 or DC120; followed by F, FF, TB, Px or QD; Rated 480 V AC max, 120 VDC max, 60 W max, 1, 2, 3, or 4 lamps, 24 inches or 48 inches

Temperature Coded* as follows:
Table 1 Operating Temperature - C Operating Temperature Code

Cat. Series	W	Lamp Type	Lamp Compart-ment Length	Number of Lamps	Class I, Div. 2 Groups A,B,C & D; (Zone 2, Groups IIC, IIB, IIA)	Class II, Div. 1, Groups F and G	Supply Wire Suitable For ½C	Rated Ambient °C
LZ2N17 230	17	Fluor Linear Bi Pin, T5	48 in	2	T6	T6	60	40
LZ2N17 330	17	Fluor Linear Bi Pin, T5	48 in	3	T6	T6	60	40
LZ2N28230	28	Fluor Linear Bi Pin, T5	48 in	2	T4A	T5	60	40
LZ2N28330	28	Fluor Linear Bi Pin, T5	48 in	3	T4A	T5	60	40
LZ3N32230	32	Fluor Linear Bi Pin, T8	48 in	2	T6	T5	75	40
					T5	---	90	55
LZ2N32215	32	Fluor Linear Bi Pin, T8	48 in	2	T6	T5	75	40
					T5	---	90	55
LZ2N32330	32	Fluor Linear Bi Pin, T8	48 in	3	T6	T5	75	40
					T5	---	90	55
LZ3N33315	32	Fluor Linear Bi Pin, T8	48 in	3	T6	T5	75	40
					T5	---	90	55
LZ2N40130	40	Como Fluor, Long Twin Tube, 4 Pin	24 in.	1	T5	T5	60	40
LZ2N40115	40	Como Fluor, Long Twin Tube, 4 Pin	24 in.	1	T5	T5	60	40
LZ2N40230	40	Como Fluor, Long Twin Tube, 4 Pin	24 in.	2	T5	T5	60	40
LZ2N40230	40	Como Fluor, Long Twin Tube, 4 Pin	24 in.	2	T5	T5	60	40

Contact us | Export | Privacy | Accessibility | Careers

						T5	60	40
LZIN40430	40	Comp Fluor, Long Twin Tube, 4 Pin	48 in.	4	T4A	T5	60	40
LZIN40415	40	Comp Fluor, Long Twin Tube, 4 Pin	48 in.	4	T4A	T5	60	40
LZIN40201	40	Fluor Linear Med Bi Pin, T12	48 in.	2	T4A	T5	60	40
LZIN40204	40	Fluor Linear Med Bi Pin, T12	48 in.	2	T4A	T5	60	40
LZIN40208	40	Fluor Linear Med Bi Pin, T12	48 in.	2	T4A	T5	60	40
LZIN44201	44	Fluor Linear HO, RDC, T12	48 in.	2	T5	T5	60	40
LZIN44204	44	Fluor Linear HO, RDC, T12	48 in.	2	T5	T5	60	40
LZIN54230	54	Fluor Linear Bi Pin, T5	48 in.	2	T3C	T6	75	40
LZIN54330	54	Fluor Linear Bi Pin, T5	48 in.	3	T3A	T6	75	40
LZIN55130	55	Comp. Fluor. Long Twin Tube, 4 Pin	24 in.	1	T3B	T6	60	40
LZIN60230	60	Fluor Linear HO, RDC, T12	48 in.	2	T4	T5	75	40

Table 1 6: Temperature Code Ex nA

Cat. Series	W	Lamp Type	Lamp Compart-ment Length	Number of Lamps	Class I, Zone 2, AEx nA/ Ex nA	Rated Ambient °C
LZIN17230	17	Fluor Linear Bi Pin, T5	48 in.	2	T6	40
LZIN17330	17	Fluor Linear Bi Pin, T5	48 in.	3	T6	40
LZIN28230	28	Fluor Linear Bi Pin, T5	48 in.	2	T4	40
LZIN28330	28	Fluor Linear Bi Pin, T5	48 in.	3	T4	40
LZIN32230	32	Fluor Linear Bi Pin, T8	48 in.	2	T6	40
LZIN32215	32	Fluor Linear Bi Pin, T8	48 in.	2	T6	40
LZIN32330	32	Fluor Linear Bi Pin, T8	48 in.	3	T6 T6	40 55
LZIN32315	32	Fluor Linear Bi Pin, T8	48 in.	3	T6 T6	40 55
LZIN40130	40	Comp Fluor, Long Twin Tube, 4 Pin	24 in.	1	T5	40
LZIN40115	40	Comp Fluor, Long Twin Tube, 4 Pin	24 in.	1	T5	40
LZIN40230	40	Comp Fluor, Long Twin Tube, 4 Pin	24 in.	2	T5	40
LZIN40230	40	Comp Fluor, Long Twin Tube, 4 Pin	24 in.	2	T5	40
LZIN40215	40	Comp Fluor, Long Twin Tube, 4 Pin	24 in.	2	T5	40
LZIN40430	40	Comp Fluor, Long Twin Tube, 4 Pin	48 in.	4	T4	40
LZIN40415	40	Comp Fluor, Long Twin Tube, 4 Pin	48 in.	4	T4	40
LZIN40201	40	Fluor Linear Med Bi Pin, T12	48 in.	2	T4	40
LZIN40204	40	Fluor Linear Med Bi Pin, T12	48 in.	2	T4	40
LZIN40208	40	Fluor Linear Med Bi Pin, T12	48 in.	2	T4	40
LZIN44201	44	Fluor Linear HO, RDC, T12	48 in.	2	T5	40
LZIN44204	44	Fluor Linear HO, RDC, T12	48 in.	2	T5	40
LZIN54230	54	Fluor Linear Bi Pin, T5	48 in.	2	T4	40
LZIN54330	54	Fluor Linear Bi Pin, T5	48 in.	2	T3	40
LZIN55130	55	Comp Fluor, Long Twin Tube, 4 Pin	24 in.	1	T3	40
LZIN60230	60	Fluor Linear HO, RDC, T12	48 in.	2	T4	40

Note: Supply Wire Temperature is the same as tabulated under Table 1for each corresponding Series catalog number.
Temperature Code AEx nA/Ex nA

Cat. Series	W	Lamp Type	Lamp Compart-ment Length	Number of Lamps	Class I, Div 2 Groups A,B,C & D;(Zone 2, Groups IIC, IIB, IIA)	Class II, Div 1, Groups F and G	Supply Wire Suitable For ½ C
LZINT7230	17	Fluor Linear Bi Pin, T5	48 in	2	T6	T6	60
LZINT7330	17	Fluor Linear Bi Pin, T5	48 in	3	T6	T6	60
LZIN28230	28	Fluor Linear Bi Pin, T5	48 in.	2	T4A	T5	60
LZIN28330	28	Fluor Linear Bi Pin, T5	48 in.	3	T4A	T5	60
LZIN32230	32	Fluor Linear Bi Pin, T8	48 in.	2	T6	T5	75
LZIN32215	32	Fluor Linear Bi Pin, T8	48 in.	2	T6	T5	75
LZIN32330	32	Fluor Linear Bi Pin, T8	48 in.	3	T6	T5	75
LZIN32315	32	Fluor Linear Bi Pin, T8	48 in.	3	T6	T5	75
LZIN40130	40	Comp Fluor, Long Twin Tube, 4 Pin	24 in.	1	T5	T5	60
LZIN40115	40	Comp Fluor, Long Twin Tube, 4 Pin	24 in.	1	T5	T5	60
LZIN40230	40	Comp Fluor, Long Twin Tube, 4 Pin	24 in.	2	T5	T5	60
LZIN40230	40	Comp Fluor, Long Twin Tube, 4 Pin	24 in.	2	T5	T5	60
LZIN40215	40	Comp Fluor, Long Twin Tube, 4 Pin	24 in.	2	T5	T5	60
LZIN40430	40	Comp Fluor, Long Twin Tube, 4 Pin	48 in.	4	T4A	T5	60
LZIN40415	40	Comp Fluor, Long Twin Tube, 4 Pin	48 in.	4	T4A	T5	60
LZIN40201	40	Fluor Linear Med Bi Pin, T12	48 in.	2	T4A	T5	60
LZIN40204	40	Fluor Linear Med Bi Pin, T12	48 in.	2	T4A	T5	60
LZIN40208	40	Fluor Linear Med Bi Pin, T12	48 in.	2	T4A	T5	60
LZIN44201	44	Fluor Linear HO, RDC, T12	48 in.	2	T5	T5	60
LZIN44204	44	Fluor Linear HO, RDC, T12	48 in.	2	T5	T5	60
LZIN54230	54	Fluor Linear Bi Pin, T5	48 in.	2	T3C	T6	75
LZIN55130	55	Comp. Fluor. Long Twin Tube, 4 Pin	24	1	T3B	T6	60
LZIN60201	60	Fluor Linear HO, RDC, T12	48 in.	2	T4	T5	75
LZIN60204	60	Fluor Linear HO, RDC, T12	48 in.	2	T4	T5	75

- Fluorescent Fixture Series LZINE, followed by 1 or 2; followed by 32, 40, 44 or 60; followed by L2,3 or 4; followed by 01, 04, 06, 15 or 30. Rated 347V ac max, 60W max; L 2, 3 or 4 lamps, 24 or 48 inches.

Temperature Coded as follows:
Operating Temperature, ½C, Operating Temperature Code

Cat. Series	W	Lamp Type	Lamp Compartment Length	Number of Lamps	Class I, Div. 2 Gr A,B,C & D, Zone 2 Gr IIC, IIB, IIA	Class II, Div. 1, Groups F and G	Supply Wire Suitable For ½ C
LZINE2-32230	32	Fluor Linear Bi Pin, T8	48 in.	2	T6	T5	75
LZINE2-32330	32	Fluor Linear Bi Pin, T8	48 in.	3	T6	T5	75
LZINE1-40130	40	Comp Fluor, Long Twin Tube, 4 Pin	24 in.	1	T5	T5	60
LZINE1-40230	40	Comp Fluor, Long Twin Tube, 4 Pin	24 in.	2	T5	T5	60
LZINE1-40430	40	Comp Fluor, Long Twin Tube, 4 Pin	48 in.	4	T4A	T5	60
LZINE2-40201	40	Fluor Linear Med Bi Pin, T12	48 in.	2	T4A	T5	60
LZINE2-40204	40	Fluor Linear Med Bi Pin, T12	48 in.	2	T4A	T5	60
LZINE2-40208	40	Fluor Linear Med Bi Pin, T12	48 in.	2	T4A	T5	60
LZINE1-44201	44	Fluor Linear HO, RDC, T12	48 in.	2	T5	T5	60
LZINE1-44204	44	Fluor Linear HO, RDC, T12	48 in.	2	T5	T5	60
LZINE1-60201	60	Fluor Linear HO, RDC, T12	48 in.	2	T4	T5	75
LZINE1-60204	60	Fluor Linear HO, RDC, T12	48 in.	2	T4	T5	75

Temperature Code ExnA

Cat. Series	W	Lamp Type	Lamp Compartment Length	Number of Lamps	Temperature Code
LZINE2-32230	32	Fluor Linear Bi Pin, T8	48 in.	2	T6
LZINE2-32330	32	Fluor Linear Bi Pin, T8	48 in.	3	T6
LZINE1-40130	40	Comp Fluor, Long Twin Tube, 4 Pin	24 in.	1	T5
LZINE1-40230	40	Comp Fluor, Long Twin Tube, 4 Pin	24 in.	2	T5
LZINE1-40430	40	Comp Fluor, Long Twin Tube, 4 Pin	48 in.	4	T4
LZINE2-40201	40	Fluor Linear Med Bi Pin, T12	48 in.	2	T4
LZINE2-40204	40	Fluor Linear Med Bi Pin, T12	48 in.	2	T4
LZINE2-40208	40	Fluor Linear Med Bi Pin, T12	48 in.	2	T4
LZINE1-44201	44	Fluor Linear HO, RDC, T12	48 in.	2	T5
LZINE1-44204	44	Fluor Linear HO, RDC, T12	48 in.	2	T5
LZINE1-60201	60	Fluor Linear HO, RDC, T12	48 in.	2	T4
LZINE1-60204	60	Fluor Linear HO, RDC, T12	48 in.	2	T4

Note: Supply Wire Terminal is the same as tabulated under Table 1 for each corresponding Series catalogue number.
- Class I, Division 2, Groups A, B, C and D; Temperature Coded T1, T2, T2A, T2B, T2C, T2D, T3, T3A, T3B, T3C (where applicable);
  Class II, Groups E, F and G; Class III

  Ex nA II; Temperature Coded T3, T4, T5 or T6 (where applicable);
- KILLARK VM6 Series, Model Number VM6, followed by H, M, S, P, E or Q; followed by XXXXXX, rated 480V max, 600W max; may be supplied with either Globe, Enclosed Reflector, or Refractor. For use with supply wiring rated 90¿¿C or higher

NOTE:

(1) Suffixes denote Lamp Type, Cover Type, Conduit Size, Lamp Wattage, Input Voltage and Optics.
Class I, Division 2, Groups A, B, C and D; Temperature Code: T2, T2A, T2B, T2C, T2D, T3, T3A, T3B, T3C (or maximum operating temperature);
Class II, Groups E, F and G; Class III; Temperature Code: T3A, T3C, T4, T4A, T5, T6
Ex nA nR II; Temperature Code : T3, T4, T5 or T6;
- KILLARK VMland VM3 Series, Model Number VM-XXXXXX, rated 480 V max, 175 W max.; may be supplied with either Globe, Enclosed Reflector, or Refractor. For use with supply wiring rated 60, 75, 90 or 105¿¿C (where applicable).

NOTES:

ne) Atmospheres.

Class I, Division 2, Groups A, B, C and D; Temperature Code: T2, T2A, T2B, T2C, T2D, T3, T3A, T3B or T3C;
Class II, Groups E, F and G; Class III;
Ex nA nR II; IP66, Temperature Code : T3, T4, T5 or T6:

- KILLARK VM3 and VM4 Series, Model Number VM-XXXXXX, rated 480 V max, 250 W max.; may be supplied with either Globe, Enclosed Reflector, or Refractor. For use with supply wiring rated 60¿½ C or higher.

NOTES
1. Suffixes denote Lamp Type, Cover Type, Conduit Size, Lamp Wattage, Input Voltage and Optics.
2. Model Number is followed by alphanumeric suffixes denoting electrical and mechanical variations.

Class I, Division 2, Groups A, B, C and D; Class II, Division 2, Groups F and G; Class III; Type 4 Temperature Coded:

- Fluorescent Fixture for use in hazardous locations, Series NV3T, rated 277 V max. Temperature Coded T3B, T3C, T3A, T3B or T3C.
- Incandescent Fixture for use in hazardous locations, Series NV2I, rated 300 V max. Temperature Coded T2, T2A, T2B or T2C.

Class I, Division 2, Groups A, B, C and D; Temperature Coded Type 4:

- Incandescent Fixtures for use in hazardous locations, Series NV2I, rated 300 V max, 150W max. Temperature Coded T2 or T2B

Note: Alphanumeric suffixes are added to the Catalogue Number to denote electrical and mechanical variations.

Class I, Div. 2, Groups A, B, C and D; End, Type 4: Temperature Coded:

- Outdoor, Integral ballast luminaries, KF Series rated 400 W max, 600 V max, 50/60 Hz. Catalog number KF, followed by S, M, H or P followed by 3, 5, 7, 8, 10, 15, 17, 20, 25, 32 or 40; followed by 0, 4, 5, 6, 7, 8, 9, 35 or 36; followed by 78 followed by other options. Cat No's KFS-15X-76X, 150W, HPS, temperature code T2B; KFS-25X-76X, 250W, HPS, temperature code T2B; KFH-25X-76X, 250W, MH, temperature code T2A; KFS-40X-76X, 400W, HPS, temperature rated 358C and KFH-40X-76X, 400W, MH, temperature rated 350C.
- Outdoor, integral ballast, vertical mount only Series KF rated 1000 W max, 600 V max, 50/60 Hz. Catalog number KF, followed by S, M, H or P followed by 10 or 100, followed by 0,4,5,6,7,8 or 9; followed by 78 followed by other options, 400W max for use with HPS, MH or MV type lamps and Series KF, rated 600V max, 60Hz, 1000W max for use with HPS or MH type lamps or 400W for use with MV type lamps

Maximum Operating Ambient as follows:

Cat No	Lamp Type	Wattage	Max. Operating Temp. ¿½C	Class I Div. 2 Groups	Max Ambient *Temp. ¿½C
KFS-3X-76X	HPS	35	260	A, B, C & D	25
KFM-5X-76X	MV	50	350	B, C & D	25
KFS-5X-76X	HPS	50	260	A, B, C & D	25
KFH-7X-76X	MH	70	325	B, C & D	25
KFS-7X-76X	HPS	70	260	A, B, C & D	25
KFS-7X-76X	HPS	70	260	A, B, C & D	40
KFS-7X-76X	HPS	70	260	A, B, C & D	55
KFS-7X-76X	HPS	70	260	A, B, C & D	65
KFM-8X-76X	MV	75	350	A, B, C & D	25
KFM-10X-76X	MV	100	350	A, B, C & D	25
KFS-10X-76X	HPS	100	260	A, B, C & D	25
KFS-10X-76X	HPS	100	260	A, B, C & D	40
KFS-10X-76X	HPS	100	260	A, B, C & D	55
KFS-10X-76X	HPS	100	260	A, B, C & D	65
KFH-10X-76X	MH	100	325	A, B, C & D	25
KFS-15X-76X	HPS	150	260	A, B, C & D	25
KFS-15X-76X	HPS	150	260	A, B, C & D	40
KFS-15X-76X	HPS	150	260	A, B, C & D	55
KFS-15X-76X	HPS	150	260	A, B, C & D	65
KFP-15X-76X	MHP	150	325	B, C & D	40
KFP-15X-76X	MHP	150	325	B, C & D	55
KFP-15X-76X	MHP	150	325	B, C & D	65
KFM-17X-76X	MV	175	350	B, C & D	25
KFP-17X-76X	MHP	175	325	B, C & D	40
KFP-17X-76X	MHP	175	325	B, C & D	55
KFP-17X-76X	MHP	175	325	B, C & D	65
KFP-17X-76X	MH	175	350	B, C & D	40
KFP-17X-76X	MH	175	300	A, B, C & D	40
KFP-17X-76X	MH	175	350	B, C & D	55
KFP-17X-76X	MH	175	300	B, C & D	55
KFP-17X-76X	MH	175	325	B, C & D	65
KFP-20X-76X	MHP	200	325	B, C & D	40
KFP-20X-76X	MHP	200	325	B, C & D	55
KFP-20X-76X	MHP	200	325	B, C & D	65
KFP-20X-76X	HPS	200	325	B, C & D	40
KFP-20X-76X	HPS	200	325	B, C & D	55
KFP-20X-76X	HPS	200	325	B, C & D	65
KFP-25X-76X	MH	250	325	B, C & D	25
KFP-25X-76X	MH	250	350	B, C & D	40
KFS-25X-76X	MH	250	300	A, B, C & D	40
KFH-25X-76X	MH	250	350	B, C & D	55
KFH-25X-76X	MH	250	300	A, B, C & D	55
KFH-25X-76X	MH	250	325	B, C & D	65
KFH-25X-76X	HPS	250	325	B, C & D	25
KFH-25X-76X	HPS	250	325	B, C & D	40
KFH-25X-76X	HPS	250	325	B, C & D	55
KFH-25X-76X	HPS	250	325	B, C & D	65
KFH-25X-76X	MHP	250	350	B, C & D	40
KFH-25X-76X	MHP	250	350	B, C & D	55
KFM-25X-76X	MV	250	350	B, C & D	25
KFP-32X-76X	MHP	320	366	B, C & D	40
KFP-32X-76X	MHP	320	366	B, C & D	55
KFP-35X-76X	MHP	350	350	B, C & D	40
KFP-35X-76X	MHP	350	350	B, C & D	55
KFS-40X-76X	HPS	400	358	B, C & D	25
KFS-40X-76X	HPS	400	357	B, C & D	40
KFS-40X-76X	HPS	400	363	B, C & D	50
KFS-40X-76X	HPS	400	363	B, C & D	55
KFP-40X-76X	MHP	400	350	B, C & D	40
KFP-40X-76X	MHP	400	325	B, C & D	55
KFH-40X-76X	MH	400	350	B, C & D	25
KFH-40X-76X	MH	400	325	B, C & D	40
KFH-40X-76X	MH	400	325	B, C & D	40
KFH-40X-76X	MH	400	301	A, B, C & D	50
KFM-40X-76X	MV	400	350	B, C & D	25
KFH-100X-76X	MH	1000	442	B, C & D	40
KFS-100X-76X	HPS	1000	378	B, C & D	25
KFS-100X-76X	HPS	1000	378	B, C & D	40
KFS-100X-76X	HPS	1000	392	B, C & D	40
KFS-60X-76X	HPS	600	418	B, C & D	40
KFP-100X-76X	MHP	1000	445	B, C, & D	40
KFP-87X-76X	MHP	875	445	B, C, & D	40
KFP-75X-76X	MHP	750	445	B, C, & D	40

Note: * Luminaire Aiming Ranges varies from 0 to 180, 0 to 135, 45 to 135 or 45 to 90

Ex nR II, T4, X; CSA Enclosure Type 4, IP66:

- Restricted Breathing Model KFS-40X-XXNR, hard mounted integral ballast, capacitor and starter door mounted, vertical lamp, rated 600 V max., 60 Hz, 400 W HPS max., Maximum Ambient 55 C. Temperature Code T4.

Ex nR, II, T*, X; CSA Enclosure Type 4, IP66

- Restricted breathing Model KF Series, followed by S, M, H or P followed by 3, 5, 7, 8, 10, 15, 17, 25, 32, 40, 60, 75, 87 or 100, followed by 0, 5, 6, 7, 8, 9, 35 or 36; followed by 78, may be followed by F other options not affecting certification. Temperature codes as shown in Table 1 based on wattage, lamp type and ambient temperature as follows:

Wattage(W)	Lamp Type	Max. Ambient Temperature (¿½C)	Restricted Breathing Temperature Code (Ex nR/AEx nR)	Supply Wire Temperature (¿½C)	Luminaire Aiming Range*
1000	HPS	40	T2	110	C
400	HPS	55	T3	110	B
400	HPS	50	T3	105	C
400	HPS	40	T3	90	A
600	HPS	40	T3	105	D
250	HPS	65	T3	105	B
250	HPS	55	T3	105	A
250	HPS	40	T4	90	A
200	HPS	65	T3	105	B
200	HPS	55	T3	105	A
200	HPS	40	T4	90	A
150	HPS	65	T4	105	A
150	HPS	55	T4	90	A
150	HPS	40	T4	75	A
150	HPS	25	T4	75	A
100	HPS	65	T4	105	A
100	HPS	55	T4	90	A
100	HPS	40	T4	75	A
70	HPS	65	T4	105	A
70	HPS	55	T4	90	A

Contact us | Accept Privacy | Accessibility | Careers

					75	A
					110	C
400	MH	50		T3	102	D
400	MH	40		T3	90	C
400	MH	40		T3	105	B
400	MH	25		T4	90	B
250	MH	65		T4	105	C
250	MH	55		T4	90	C
250	MH	55		T3	105	A
250	MH	40		T5	90	C
250	MH	40		T4	90	A
250	MH	25		T4	90	A
175	MH	65		T4	105	C
175	MH	55		T4	90	C
175	MH	55		T3	105	A
175	MH	40		T5	90	C
175	MH	40		T4	90	A
175	MH	25		T4	90	A
400	MV	25		T3	90	A
250	MV	25		T3	90	A
175	MV	25		T3	90	A
1000	MHP	40		T2	125	C
875	MHP	40		T2	125	C
750	MHP	40		T2	125	C
400	MHP	55		T3	110	C
400	MHP	40		T3	90	A
350	MHP	55		T3	110	C
350	MHP	40		T3	90	A
320	MHP	55		T3	105	A
320	MHP	40		T3	90	A
250	MHP	55		T3	105	A
250	MHP	40		T3	90	A
200	MHP	65		T3	105	A
200	MHP	55		T3	90	A
200	MHP	40		T4	90	A
175	MHP	65		T3	105	A
175	MHP	55		T3	90	A
175	MHP	40		T4	90	A
150	MHP	65		T3	105	A
150	MHP	55		T3	90	A
150	MHP	40		T4	90	A

* I¿½ A: Ol¿½ to 180I¿½; B: Ol¿½ to 135I¿½; C: 45I¿½ to 135I¿½; D: 45I¿½ to 90I¿½

- KFS, KFH and KFP ManiGard Luminaires, followed by 10, 15, 17, 25, 32, 35 or 40; followed by 0, 5, 6, 7, 8 or 9; followed by SS, may be followed by nR; may be followed by P1 to P8, may be followed by P1 to P3.
- Series Series KFS, KFH, KFP and KFM, rated 600 V max, 50 & 60 HZ, 400 W max HPS, MH, MHP and MV.

NOTE: Instructions must be provided to the end user, and must be followed to maintain the integrity of the installation, not withstanding the requirements of the Canadian Electrical Code Part 1.
Class I, Division 2, Groups A, B, C and D, Temperature Coded: T2B, T2D, T3, T3A or T3C; Class II, Groups E, F, G; Class III; Enclosure Types 3 and/or 4 (where applicable):
Ex nR , T4, T5 or T6: IP66:

Emergency back-up Lighting Fixtures, Series VE4Q, rated 347VAC, 60Hz ; 120/277 VAC, 50/60 Hz, 84 W max, CF lamp(s).
Emergency back-up Lighting Fixtures, Series VE3Q, rated 347VAC, 60 Hz;120/277 VAC, 50/60 Hz, 84 W max, CF lamp(s).

Class II, Groups E, F, G; Class III; Enclosure Types 3 and/or 4 (where applicable): IP66
Emergency back-up Lighting Fixtures, Series DE3Q, rated 347VAC, 60 Hz; 120/277 VAC, 60 Hz, 26 W max, CF lamp(s).
Emergency back-up Lighting Fixtures, Series DE4Q, rated 347 VAC, 60 Hz ; 120/277 VAC, 60 Hz, 28 W max, CF lamp(s).

Ballast Tank Assembly

Series VE3Q, DE3Q or VE4Q, DE4Q followed by 0013, 18, 26, 32, 42, 26, 36, 52, 64 or 84; followed by 13, 15, 26, 32, 42, 26, 36, 52, 64 or 84; followed by E15 or E30 .

Optics

VE3Q or DE3Q: VMG12, VMR17, VMR175, VZRG1850, VZRG2550, VZRG2020, VZRP170
VE4Q or DE4Q: VMG25, VMR251, VMR253, VMR255, VMR340, VMEP40, VZRG4020, VZRG4050, VZRP175B

External Guards

VE4Q or DE4Q: VWAG255, VMERG, VMRWG
VE3Q or DE3Q: VMAG17, VMRWG8, VMRWG

External Reflectors

VE3Q, VE4Q, DE3Q or DE4Q : VMPSD40, VMPA40, HRD400, HR340DALZ

Mounting Spice Boxes

VE3Q, VE4Q, DE3Q or DE4Q : VMA28, VMA36, VMF28, VMF38, VMX28, VMX38, VMX68, VMX618, VMX638, VMX818, VMB828, VMB838, VMC28, VMC38, VMD48, VMD58, VMS48, VMS58

Options

VE3Q, VE4Q: RD, NR, F, FF, TB, P1, P2, QD
DE3Q or DE4Q: RD, NR, F, FF, TB, QD
Class I, Div. 2, Groups A, B, C and D; Class II, Div. 1, Groups E, F and G; Class III; Temperature Coded T3C, T3B, T4A, or T6:
Ex nA T3, T4 or T6
- Fluorescent Fixture for use in hazardous locations, Series LZ2S, followed by 17, 28, 32, 40, 44, 54, 55 or 60; followed by 1, 2, 3 or 4; followed by 01, 04, 08, 15, 30, 33, DC012, DC024 or DC120; Rated 480 V AC max, 60 W max, 1, 2, 3, or 4 lamps, 24 inches or 48 inches
- Fluorescent Fixture with Emergency battery back up, Series LZ2SE, followed by 1 or 2; followed by 17, 28, 32, 40, 44, 54, 55 or 60; followed by 1, 2, 3 or 4; followed by 01, 04, 08, 15, 30, 33, DC012, DC024 or DC120 followed by F1, F4, F6 or F8. Rated 480 VAC max, 60 W max, 1, 2, 3 or 4 lamps, 24 or 48 inches.

Class I, Div. 2, Groups A, B, C and D; Class II, Div. 1, Groups E, F and G; Class III; Temperature Coded T3C, T3B, T4A, or T6:
Ex nA T3, T4 or T6
- Fluorescent Fixture for use in hazardous locations, Series LZ2S, followed by 17, 28, 32, 40, 44, 54, 55 or 60; followed by 1, 2, 3 or 4; followed by 01, 04, 08, 15, 30, 33 or DC120; followed by T3x, Px or Qx; Rated 480 V AC max, 120 VDC max, 60 W max, 1, 2, 3, or 4 lamps, 24 inches or 48 inches

Operating Temperature, I¿½C, Operating Temperature Code

Cat. Series	W	Lamp Type	Lamp Compart-ment Length	Number of Lamps	Class I, Div. 2 Gr A,B,C & D; Zone 2 Gr IIC, IIB, IIA	Class II, Div. 1, Groups F and G	Supply Wire Suitable For I¿½ C
LZ2SE140130	40	Comp Fluor, Long Twin Tube, 4 Pin	2 ft.	1N, 1E	T3C	T6	75
LZ2SE155130	55	Comp Fluor, Long Twin Tube, 4 Pin	2 ft.	1N, 1E	T3B	T6	60
LZ2SE140730	40	Comp Fluor, Long Twin Tube, 4 Pin	2 ft.	2N, 1E	T3C	T6	75
LZ2SE140430	40	Comp Fluor, Long Twin Tube, 4 Pin	4 ft.	4N, 1E	T3C	T6	75
LZ2SE217230	17	Fluor Linear Bi Pin, T8	4 ft.	2N, 2E	T6	T6	60
LZ2SE217330	17	Fluor Linear Bi Pin, T8	4 ft.	3N, 2E	T6	T6	60
LZ2SE128230	28	Fluor Linear Bi Pin, T5	4 ft.	2N, 1E	T4A	T6	60
LZ2SE128330	28	Fluor Linear Bi Pin, T5	4 ft.	3N, 1E	T4A	T6	60
LZ2SE132230	32	Fluor Linear Bi Pin, T8	4 ft.	2N, 1E	T6	T6	60
LZ2SE232230	32	Fluor Linear Bi Pin, T8	4 ft.	2N, 2E	T6	T6	60
LZ2SE132330	32	Fluor Linear Bi Pin, T8	4 ft.	3N, 1E	T6	T6	60
LZ2SE232330	32	Fluor Linear Bi Pin, T8	4 ft.	3N, 2E	T6	T6	60
LZ2SE140201	40	Fluor Linear Bi Pin, T12	4 ft.	2N, 1E	T6	T6	60
LZ2SE140204	40	Fluor Linear Bi Pin, T12	4 ft.	2N, 1E	T6	T6	60
LZ2SE140208	40	Fluor Linear Bi Pin, T12	4 ft.	2N, 1E	T4A	T6	60
LZ2SE144230	44	Fluor Linear HO, RDC, T8	4 ft.	2N, 1E	T3C	T6	60
LZ2SE154230	54	Fluor Linear Bi Pin, T5	4 ft.	2N, 1E	T3C	T6	75
LZ2SE160201	60	Fluor Linear HO, RDC, T12	4 ft.	2N, 1E	T4	T6	75
LZ2SE160204	60	Fluor Linear HO, RDC, T12	4 ft.	2N, 1E	T4	T6	75

Temperature Code Alfx nA/ Ex nA

Cat. Series	W	Lamp Type	Lamp Compart-ment Length	Number of Lamps	Temperature Code
LZ2SE140130	40	Comp Fluor, Long Twin Tube, 4 Pin	2 ft.	1N, 1E	T3
LZ2SE155130	55	Comp Fluor, Long Twin Tube, 4 Pin	2 ft.	1N, 1E	T3
LZ2SE140230	40	Comp Fluor, Long Twin Tube, 4 Pin	2 ft.	2N, 1E	T3
LZ2SE140430	40	Comp Fluor, Long Twin Tube, 4 Pin	4 ft.	4N, 1E	T3
LZ2SE217230	17	Fluor Linear Bi Pin, T8	4 ft.	2N, 2E	T6
LZ2SE217330	17	Fluor Linear Bi Pin, T8	4 ft.	3N, 2E	T6
LZ2SE128230	28	Fluor Linear Bi Pin, T5	4 ft.	2N, 1E	T4
LZ2SE128330	28	Fluor Linear Bi Pin, T5	4 ft.	3N, 1E	T4
LZ2SE132230	32	Fluor Linear Bi Pin, T8	4 ft.	2N, 1E	T6
LZ2SE232230	32	Fluor Linear Bi Pin, T8	4 ft.	2N, 2E	T6
LZ2SE132330	32	Fluor Linear Bi Pin, T8	4 ft.	3N, 1E	T6
LZ2SE232330	32	Fluor Linear Bi Pin, T8	4 ft.	3N, 2E	T6
LZ2SE140201	40	Fluor Linear Bi Pin, T12	4 ft.	2N, 1E	T4
LZ2SE140204	40	Fluor Linear Bi Pin, T12	4 ft.	2N, 1E	T4
LZ2SE140208	40	Fluor Linear Bi Pin, T12	4 ft.	2N, 1E	T4
LZ2SE144230	44	Fluor Linear HO, RDC, T8	4 ft.	2N, 1E	T4
LZ2SE154230	54	Fluor Linear Bi Pin, T5	4 ft.	2N, 1E	T4
LZ2SE160201	60	Fluor Linear HO, RDC, T12	4 ft.	2N, 1E	T4
LZ2SE160204	60	Fluor Linear HO, RDC, T12	4 ft.	2N, 1E	T4

Class I, Div. 2, Groups A, B, C and D; Class II, Div. 1, Groups E, F and G; Class III; Temperature Coded T3C, T3B, T4A, or T6; Enclosure Type 4X:
Ex nA T3, T4 or T6; IP66
- Fluorescent Fixture for use in hazardous locations, Series LZ2S, followed by 17, 28, 32, 40, 44, 54, 55 or 60; followed by 1, 2, 3 or 4; followed by 01, 04, 08, 15, 30, 33 or DC120; followed by T3x, Px or Qx; Rated 480 V AC max, 120 VDC max, 60 W max, 1, 2, 3, or 4 lamps, 24 inches or 48 inches

Operating Temperature C, Operating Temperature Code

Cat. Series	W	Lamp Type	Lamp Compartment Length	Number of Lamps	Class I, Div. 2 Groups A,B,C & D;(Zone 2, Groups IIC, IIB, IIA)	Class II, Div. 1, Groups F and G	Supply Wire Suitable For C	Ambient C

Contact Us Export Privacy Accessibility Careers

					IC	T6	75	40
					I3	T6	60	40
LZIS40230	40	Comp Fluor, Long Twin Tube, 4 Pin	2 ft.	2	T3C	T6	75	40
LZIS40430	40	Comp Fluor, Long Twin Tube, 4 Pin	4 ft.	4	T3C	T6	75	40
LZIS17230	17	Fluor Linear Bi Pin, T5	4 ft.	2	T6	T6	60	40
LZIS17330	17	Fluor Linear Bi Pin, T5	4 ft.	3	T6	T6	60	40
LZIS28230	28	Fluor Linear Bi Pin, T5	4 ft.	2	T4A	T6	60	40
LZIS28330	28	Fluor Linear Bi Pin, T5	4 ft.	3	T4A	T6	60	40
LZIS32230	32	Fluor Linear Bi Pin, T8	4 ft.	2	T6	T6	60	40
					T5	XX	75	55
LZIS32215	32	Fluor Linear Bi Pin, T8	4 ft.	2	T6	T6	60	40
					T5	XX	75	55
LZIS32330	32	Fluor Linear Bi Pin, T8	4 ft.	3	T6	T6	60	40
LZIS32315	32	Fluor Linear Bi Pin, T8	4 ft.	3	T6	T6	60	40
LZIS40201	40	Fluor Linear Bi Pin, T12	4 ft.	2	T4A	T6	60	40
LZIS40204	40	Fluor Linear Bi Pin, T12	4 ft.	2	T4A	T6	60	40
LZIS40208	40	Fluor Linear Bi Pin, T12	4 ft.	2	T4A	T6	60	40
LZIS44230	44	Fluor Linear HO, RDC, T8	4 ft.	2	T4A	T6	60	40
LZIS54330	54	Fluor Linear Bi Pin, T5	4 ft.	3	T3B	XX	75	30
LZIS54230	54	Fluor Linear Bi Pin, T5	4 ft.	2	T3C	T6	75	40
LZIS60230	60	Fluor Linear HO, RDC, T12	4 ft.	2	T4	T6	75	40

-

Temperature Code Ex nA

Cat. Series	W	Lamp Type	Lamp Compart-ment Length	Number of Lamps	Class I, Zone 2, Ex nA
LZIS40130	40	Comp Fluor, Long Twin Tube, 4 Pin	2 ft.	1	T3
LZIS55130	55	Comp Fluor, Long Twin Tube, 4 Pin	2 ft.	1	T3
LZIS40230	40	Comp Fluor, Long Twin Tube, 4 Pin	2 ft.	2	T3
LZIS40430	40	Comp Fluor, Long Twin Tube, 4 Pin	4 ft.	4	T3
LZIS17230	17	Fluor Linear Bi Pin, T5	4 ft.	2	T6
LZIS17330	17	Fluor Linear Bi Pin, T5	4 ft.	3	T6
LZIS28230	28	Fluor Linear Bi Pin, T5	4 ft.	2	T4
LZIS28330	28	Fluor Linear Bi Pin, T5	4 ft.	3	T4
LZIS32230	32	Fluor Linear Bi Pin, T8	4 ft.	2	T6
LZIS32215	32	Fluor Linear Bi Pin, T8	4 ft.	2	T6
LZIS32330	32	Fluor Linear Bi Pin, T8	4 ft.	3	T6
LZIS32315	32	Fluor Linear Bi Pin, T8	4 ft.	3	T6
LZIS40201	40	Fluor Linear Bi Pin, T12	4 ft.	2	T4
LZIS40204	40	Fluor Linear Bi Pin, T12	4 ft.	2	T4
LZIS40208	40	Fluor Linear Bi Pin, T12	4 ft.	2	T4
LZIS44230	44	Fluor Linear HO, RDC, T8	4 ft.	2	T4
LZIS54230	54	Fluor Linear Bi Pin, T5	4 ft.	2	T4
LZIS60201	60	Fluor Linear HO, RDC, T12	4 ft.	2	T4
LZIS60204	60	Fluor Linear HO, RDC, T12	4 ft.	2	T4
LZIS40130	40	Comp Fluor, Long Twin Tube, 4 Pin	2 ft.	1	T4
LZIS55130	55	Comp Fluor, Long Twin Tube, 4 Pin	2 ft.	1	T4
LZIS40230	40	Comp Fluor, Long Twin Tube, 4 Pin	2 ft.	2	T4

Class I, Div. 2, Groups A, B, C and D; Class II, Div. 1, Groups F and G; Class III; Temperature Coded T4A, T5 or T6; Ex nA T4, T5 or T6

- Fluorescent Fixture for use in hazardous locations. Series LZ2N, followed by 17, 28, 32, 40, 44, 54, 55 or 60; followed by 1, 2, 3 or 4; followed by 01, 04, 08, 15, 30, 33 or DC120; followed by TBIx, Px or Qx; Rated 480 V AC max, 120 VDC max, 60 W max, 1, 2, 3, or 4 lamps, 24 inches or 48 inches

Temperature Coded* as follows:
Table 1 Operating Temperature, °C Operating Temperature Code

Cat. Series	W	Lamp Type	Lamp Compart-ment Length	Number of Lamps	Class I, Div. 2 Groups A,B,C & D;(Zone 2, Groups IIC, IIB, IIA)	Class II, Div. 1, Groups F and G	Supply Wire Suitable For t(s) C
LZ2N17230	17	Fluor Linear Bi Pin, T5	48 in	2	T6	T6	60
LZ2N17330	17	Fluor Linear Bi Pin, T5	48 in	3	T6	T6	60
LZ2N28230	28	Fluor Linear Bi Pin, T5	48 in.	2	T4A	T5	60
LZ2N28330	28	Fluor Linear Bi Pin, T5	48 in.	3	T4A	T5	60
LZ2N32230	32	Fluor Linear Bi Pin, T8	48 in.	2	T6	T5	75
LZ2N32215	32	Fluor Linear Bi Pin, T8	48 in.	2	T6	T5	75
LZ2N32330	32	Fluor Linear Bi Pin, T8	48 in.	3	T6	T5	75
LZ2N32315	32	Fluor Linear Bi Pin, T8	48 in.	3	T6	T5	75
LZ2N40130	40	Comp Fluor, Long Twin Tube, 4 Pin	24 in.	1	T5	T5	60
LZ2N40115	40	Comp Fluor, Long Twin Tube, 4 Pin	24 in.	1	T5	T5	60
LZ2N40230	40	Comp Fluor, Long Twin Tube, 4 Pin	24 in.	2	T5	T5	60
LZ2N40330	40	Comp Fluor, Long Twin Tube, 4 Pin	24 in.	2	T5	T5	60
LZ2N40215	40	Comp Fluor, Long Twin Tube, 4 Pin	24 in.	2	T5	T5	60
LZ2N40430	40	Comp Fluor, Long Twin Tube, 4 Pin	48 in.	4	T4A	T5	60
LZ2N40415	40	Comp Fluor, Long Twin Tube, 4 Pin	48 in.	4	T4A	T5	60
LZ2N40201	40	Fluor Linear Med Bi Pin, T12	48 in.	2	T4A	T5	60
LZ2N40204	40	Fluor Linear Med Bi Pin, T12	48 in.	2	T4A	T5	60
LZ2N40208	40	Fluor Linear Med Bi Pin, T12	48 in.	2	T4A	T5	60
LZ2N44201	44	Fluor Linear HO, RDC, T12	48 in.	2	T5	T5	60
LZ2N44204	44	Fluor Linear HO, RDC, T12	48 in.	2	T5	T5	60
LZ2N54230	54	Fluor Linear Bi Pin, T5	48 in.	2	T3C	T6	75
LZ2N55130	55	Comp. Fluor, Long Twin Tube, 4 Pin	24	1	T3B	T6	60
LZ2N60201	60	Fluor Linear HO, RDC, T12	48 in.	2	T4	T5	75
LZ2N60204	60	Fluor Linear HO, RDC, T12	48 in.	2	T4	T5	75

Table 1 A: Temperature Code AEx nA/ Ex nA

Cat Series	W	Lamp Type	Lamp Compart-ment Length	Number of Lamps	Class I, Zone 2, AEx nA/Ex nA
LZ2N17230	17	Fluor Linear Bi Pin, T5	48 in.	2	T6
LZ2N17330	17	Fluor Linear Bi Pin, T5	48 in.	3	T6
LZ2N28230	28	Fluor Linear Bi Pin, T5	48 in.	2	T4
LZ2N28330	28	Fluor Linear Bi Pin, T5	48 in.	3	T4
LZ2N32230	32	Fluor Linear Bi Pin, T8	48 in.	2	T6
LZ2N32215	32	Fluor Linear Bi Pin, T8	48 in.	2	T6
LZ2N32330	32	Fluor Linear Bi Pin, T8	48 in.	3	T6
LZ2N32315	32	Fluor Linear Bi Pin, T8	48 in.	3	T6
LZ2N40130	40	Comp Fluor, Long Twin Tube, 4 Pin	24 in.	1	T5
LZ2N40115	40	Comp Fluor, Long Twin Tube, 4 Pin	24 in.	1	T5
LZ2N40230	40	Comp Fluor, Long Twin Tube, 4 Pin	24 in.	2	T5
LZ2N40330	40	Comp Fluor, Long Twin Tube, 4 Pin	24 in.	2	T5
LZ2N40215	40	Comp Fluor, Long Twin Tube, 4 Pin	24 in.	2	T5
LZ2N40430	40	Comp Fluor, Long Twin Tube, 4 Pin	48 in.	4	T4
LZ2N40415	40	Comp Fluor, Long Twin Tube, 4 Pin	48 in.	4	T4
LZ2N40201	40	Fluor Linear Med Bi Pin, T12	48 in.	2	T4
LZ2N40204	40	Fluor Linear Med Bi Pin, T12	48 in.	2	T4
LZ2N40208	40	Fluor Linear Med Bi Pin, T12	48 in.	2	T4
LZ2N44201	44	Fluor Linear HO, RDC, T12	48 in.	2	T5
LZ2N44204	44	Fluor Linear HO, RDC, T12	48 in.	2	T5
LZ2N54230	54	Fluor Linear Bi Pin, T5	48 in.	2	T4
LZ2N55130	55	Comp Fluor, Long Twin Tube, 4 Pin	24 in.	1	T3
LZ2N60201	60	Fluor Linear HO, RDC, T12	48 in.	2	T4
LZ2N60204	60	Fluor Linear HO, RDC, T12	48 in.	2	T4

Note: Supply Wire Temperature is the same as tabulated under Table 1 for each corresponding Series catalog number.
Class I, Div. 2, Groups A, B, C and D; Class II, Div. 1, Groups F and G;
Class I, Zone 2 IIC, IIB, IIA;
Class I, Zone 2 AEx nA; Enclosure Type 4X; IP66.
Ex nA, T4, T5 or T6:

- Fluorescent Fixture Series LZ2NE, followed by 1 or 2; followed by 17, 28, 32, 40, 44, 54, 55 or 60; followed by 1, 2, 3 or 4; followed by 01, 04, 08, 15, 30, 33 or DC120; followed by F1, F4, F5, F8 TBIx, Px or Qx; Rated 480 VAC max, 120 VDC max, 60 W max; 1, 2, 3 or 4 lamps, 24 or 48 inches.

Temperature Coded as Follows:

Cat. Series	W	Lamp Type	Lamp Compart-ment Length	Number of Lamps	Class I, Div. 2 Gr A,B,C & D; Zone 2 Gr IIC, IIB, IIA	Class II, Div. 1, Groups F and G	Supply Wire Suitable For t(s) C
LZ2NE217230	17	Fluor Linear Bi Pin, T5	48 in.	2	T6	T6	60
LZ2NE217330	17	Fluor Linear Bi Pin, T5	48 in.	3	T6	T6	60
LZ2NE128230	28	Fluor Linear Bi Pin, T5	48 in.	2	T4A	T6	60
LZ2NE128330	28	Fluor Linear Bi Pin, T5	48 in.	3	T4A	T6	60
LZ2NE2-32230	32	Fluor Linear Bi Pin, T8	48 in.	2	T6	T5	75
LZ2NE2-32330	32	Fluor Linear Bi Pin, T8	48 in.	3	T6	T5	75
LZ2NE1-40130	40	Comp Fluor, Long Twin Tube, 4 Pin	24 in.	1	T5	T5	60
LZ2NE1-40230	40	Comp Fluor, Long Twin Tube, 4 Pin	24 in.	2	T5	T5	60
LZ2NE1-40430	40	Comp Fluor, Long Twin Tube, 4 Pin	48 in.	4	T4A	T5	60
LZ2NE2-40201	40	Fluor Linear Med Bi Pin, T12	48 in.	2	T4A	T5	60
LZ2NE2-40204	40	Fluor Linear Med Bi Pin, T12	48 in.	2	T4A	T5	60
LZ2NE2-40208	40	Fluor Linear Med Bi Pin, T12	48 in.	2	T4A	T5	60
LZ2NE1-44201	44	Fluor Linear HO, RDC, T12	48 in.	2	T5	T5	60

Contact Us Export Privacy Accessibility Careers

					T5	T5	60
					T3C	T6	75
LZ2NE2255130	55	Comp Fluor, Long Twin Tube, 4 Pin	24 in.	1	T3B	T6	60
LZ2NE1-60201	60	Fluor Linear HO, RDC, T12	48 in.	2	T4	T5	75
LZ2NE1-60204	60	Fluor Linear HO, RDC, T12	48 in.	2	T4	T5	75

Table 1 A: Temperature Code AEx nA/ Ex nA

Cat.Series	W	LampType	Lamp Compart-ment Length	Number of Lamps	Temperature Code
LZ2NE217230	17	Fluor Linear Bi Pin, T5	48 in.	2	T6
LZ3NE317330	17	Fluor Linear Bi Pin, T5	48 in.	3	T6
LZ2NE128230	28	Fluor Linear Bi Pin, T5	48 in.	2	T4
LZ3NE128330	28	Fluor Linear Bi Pin, T5	48 in.	3	T4
LZ2NE2-32230	32	Fluor Linear Bi Pin, T8	48 in.	2	T6
LZ3NE2-32330	32	Fluor Linear Bi Pin, T8	48 in.	3	T6
LZ2NE1-40130	40	Comp Fluor, Long Twin Tube, 4 Pin	24 in.	1	T5
LZ2NE1-40230	40	Comp Fluor, Long Twin Tube, 4 Pin	24 in.	2	T5
LZ3NE1-40430	40	Comp Fluor, Long Twin Tube, 4 Pin	48 in.	4	T4
LZ2NE2-40201	40	Fluor Linear Med Bi Pin, T12	48 in.	2	T4
LZ2NE2-40204	40	Fluor Linear Med Bi Pin, T12	48 in.	2	T4
LZ2NE2-40208	40	Fluor Linear Med Bi Pin, T12	48 in.	2	T4
LZ2NE1-44201	44	Fluor Linear HO, RDC, T12	48 in.	2	T5
LZ2NE1-44204	44	Fluor Linear HO, RDC, T12	48 in.	2	T5
LZ3NE254230	54	Fluor Linear Bi Pin, T5	48 in.	2	T4
LZ2NE255130	55	Comp Fluor, Long Twin Tube, 4 Pin	24 in.	1	T3
LZ2NE1-60201	60	Fluor Linear HO, RDC, T12	48 in.	2	T4
LZ2NE1-60204	60	Fluor Linear HO, RDC, T12	48 in.	2	T4

Note: Supply Wire Temperature is the same as tabulated under Table for each corresponding Series catalog number.
Class I, Div. 2, Groups A, B, C and D: Class II, Div. I,
Groups E, F and G; Class III
Temperature Coded T3C, T3B, T4A, or T6:
Ex nA T3, T4 or T6
- Fluorescent Fixture for use in hazardous locations, Series LZ2S, followed by 17, 28, 32, 40, 44, 54, 55 or 60; followed by 1, 2, 3 or 4; followed by 01, 04, 08, 15, 30, 33 or DC120; Rated 480 V AC max, 120 VDC max, 60 W max, 1, 2, 3, or 4 lamps, 24 inches or 48 inches

Class I, Division 2, Groups A, B, C and D; Class II, Division 1, Groups E, F and G; Class III; Temperature Coded T3C:
Ex nA nR II: Temperature Coded T4, T5 or T6:
- KILLARK VMIQ Series, Model Number VM-XXXXXX, rated 480 V max, 55 W max., may be supplied with either Globe, Enclosed Reflector, Refractor or with VZRP175 OPTIC. For use with supply wiring rated 75C or higher.

NOTES:
1. Suffixes denote Lamp Type, Cover Type, Conduit Size, Lamp Wattage, Input Voltage and Optics.

Class I, Div. 2, Groups A, B, C and D; Class II, Div. I, Groups F and G; Temperature Coded T3 or T5; Class III, Enclosure Type 3 and/or 4
Ex nA II T3; IP66, IP67 & IP68
- Series NWP followed by FN or FE; followed by 13, 18, 26,1816, 2626,0018 or 0026; followed by 30 or DC120, may be followed by P or S.

Class I, Div. 2, Groups A, B, C and D; Class II, Div. 1, Groups F and G; Temperature Coded T3, T5 or T6; Class III, Enclosure Type 3 and/or 4
Ex nA II T3 or T6; IP66, IP67 & IP68.
- Compact Fluorescent Lighting Fixtures, Series NWP followed by FN or FE; followed by 13, 18, 26, 1313, 1816, 2626, 0013, 0018 or 0026; followed by 30 or DC120, may be followed by A, AA, P, PP, S or SS, may be followed by P1 or P2: rated 277 VAC max, 125 VDC max, 26 W max.

Class I, Division 2, Groups A, B, C and D; Class II, Division 1, Groups E, F and G; Class III; Temperature Coded T4A or T4Type 4X (where applicable)
- LED Luminaires for use in hazardous locations, Series VMIL, rated 480 V max, 50W max.

Class I, Division 2, Groups A, B, C and D; Class II, Division 1, Groups E, F and G; Class III; Enclosure Type 4, Marine; Temperature Coded T4A (Class I, Div. 2), T4 (Class II, Div. 1)
- LED Luminaires for use in hazardous locations, Series MBL, rated 480VAC max, 250VDC max; 50W max.

Note: Alphanumeric suffixes are added to Series MLB catalog number to denote electrical and mechanical variations. Maximum Operating Ambient 55°C
Class I, Division 1, Groups C and D; Class II, Division 1, Groups E, F and G; Class III; Temperature Coded T6, T5, T4A or T4, Enclosure Type 4
- LED Luminaires for use in hazardous locations, Series EML, EML.C rated 277 V max, 50W max.

Class I, Division 2, Groups A, B, C and D; Class II, Division 1, Groups E, F and G; Class III; Class I, Zone 2; Temperature Coded T4A, T4 or T3C (where applicable); Enclosure Type 4X, Marine:
- LED Luminaires for use in hazardous locations, Series VM4L and WM4L, rated 480 V max, 50/60 Hz, 130W max, 125/250 VDC, 130 W max and Series VM2L and WM2L, rated 480 V max, 50/60 Hz , 65W max; 125/250 VDC, 65W max

Note: Detail Temperature Code is covered under TABLE I below:
Consisting with the following Luminaires Fixtures:
Optics VMIQ2S, VMR2S5, VMR2S1, VMR2S3, VZRG4060, VMEP40, VMEP40, VZRP175B
Guards VMAG2S5, VMRWGS, VMERG
Reflectors VMPSD40, VMP640
Mounting Splice Boxes VMX2B, VMA3B, VMF2B, VMF3B, VMX2B, VMX3B, VMX6B, VMX7B, VMX8B, VMX9B, VM828, VM838, VMC2B, VMC3B, VMD4B, VMD5B, VMS4B, VMS5B
LED Tank Assembly- VM4L12030. may be followed by A, B, X, C, D, S followed by 2, 3, 4, 5, 6, 7, 8, 9 followed by GL, GG, P5, P1, S8, S2, S6, P5 followed by G, N followed by F, FF, TBX, QD, PX.

TABLE I
Operating Temperature, ¡¡¾C (Operating Temperature Code)

Catalog Number	Rated Ambient Temp ¡¡¾C	LED Type	LED Watts	Class I, Div. 2 Groups A, B, C & D (Globe/Refractor w/ Reflector)	Class II, Div. 1 Groups E F & G (Globe/Refractor w/ Reflector)	Supply Wire Temp Deg C
VM4L/WM4L (B/C)12030/33/34	40	D/E XP-L	130	T4A	T3C	75
VM4L/WM4L (B/C)12030/33/34	55	D/E XP-L	130	T4	T3C	90
VM4L/WM4L 12030/33/34	40	A XP-L	120	T4A	T3C	75
VM4L/WM4L 12030/33/34	55	A XP-L	120	T4	T3C	90
VM4L/WM4L (B/C)12030/33/34	40	B XP-L	120	T4A	T3C	75
VM4L/WM4L (B/C)12030/33/34	55	B XP-L	120	T4	T3C	90
VM4L/WM4L (B/C)12033	40	B XP-L	120	T4A	T3C	75
VM4L/WM4L (B/C)12033	55	B XP-L	120	T4	T3C	90
VM4L/WM4L (B/C)10530/33/34	40	C XP-L	105	T4A	T3C	75
VM4L/WM4L (B/C)10530/33/34	55	C XP-L	105	T4	T3C	90
VM4L/WM4L (B/C)10534	40	C XP-L	105	T4A	T3C	75
VM4L/WM4L (B/C)10534	55	C XP-L	105	T4	T3C	90
VM4L/WM4L (B/C)10030/33/34	40	D/E XP-L	100	T4A	T3C	75
VM4L/WM4L (B/C)10030/33/34	55	D/E XP-L	100	T4	T3C	90
VM4L/WM4L (B/C)09030/33/34	40	D/E XP-L	90	T4A	T3C	75
VM4L/WM4L (B/C)09030/33/34	55	D/E XP-L	90	T4	T3C	90
VM4L/WM4L (B/C)08030/33/34	40	C XP-L	80	T4A	T3C	75
VM4L/WM4L (B/C)08030/33/34	55	C XP-L	80	T4	T3C	90
VM4L/WM4L (B/C)07030/33/34	40	D/E XP-L	70	T4A	T3C	75
VM4L/WM4L (B/C)07030/33/34	55	D/E XP-L	70	T4	T3C	90
VM4L/WM4L (B/C)06530/33/34	40	C XP-L	65	T4A	T3C	75
VM4L/WM4L (B/C)06530/33/34	55	C XP-L	65	T4	T3C	90
VM4L/WM4L (B/C)05530/33/34	40	C XP-L	55	T4A	T3C	75
VM4L/WM4L (B/C)05530/33/34	55	C XP-L	55	T4	T3C	90
VM4L/WM4L (B/C)05030/33/34	40	D/E XP-L	50	T4A	T3C	75
VM4L/WM4L (B/C)05030/33/34	55	D/E XP-L	50	T4	T3C	90
VM4L/WM4L (B/C)04030/33/34	40	C XP-L	40	T4A	T3C	75
VM4L/WM4L (B/C)04030/33/34	55	C XP-L	40	T4	T3C	90
VM4L/WM4L (B/C) 065E1330/33/34	40	XP-L	65	T5	T3C	75
VM4L/WM4L (B/C)055E1330/33/34	40	XP-L	55	T5	T3C	75
VM4L/WM4L (B/C)050E1330/33/34	40	XP-L	50	T5	T3C	75
VM4L/WM4L (B/C)040E1330/33/34	40	XP-L	40	T5	T3C	75
VM4L/WM4L (B/C)065E1330/33/34	50	XP-L	65	T4A	T3C	75
VM4L/WM4L (B/C)055E1330/33/34	50	XP-L	55	T4A	T3C	75
VM4L/WM4L (B/C)050E1330/33/34	50	XP-L	50	T4A	T3C	75
VM4L/WM4L (B/C)040E1330/33/34	50	XP-L	40	T4A	T3C	75

1. Notes: Series Cat. No VM4L, WM4L, VM2L and WM2L are followed with alphanumeric suffixes denoting electrical and mechanical variations.
2. Suitable for Wet Locations and may be marked with IP66
3. May be marked Marine Luminaire and Outdoor Type when provided with stranded wiring, and without fusing option

Class I, Division 2, Groups A, B, C and D, Temperature Coded: T2B, T2D, T3, T3A or T3C; Class II, Groups E, F, G; Class III; Enclosure Types 3 and/or 4 (where applicable):
Ex nR , T4, T5 or T6: IP66:
- Compact Fluorescent Luminaires, Series VQIF, VQ2F rated 347 VAC, 50/60 Hz or 129 VDC+/- 10%, 84 W max, may be supplied with either Globe, Enclosed Reflector, or Refractor.

NOTES:
(1) Suffixes denote Lamp Type, Cover Type, Conduit Size, Lamp Wattage, Input Voltage and Optics.
(2) Detail Temperature Codes or Maximum Surface Temperature are covered under Tables 1 to 4 (Class I, Div. 2, Class II and Class III; Class I, Zone 2, Ex nA, nR II/AEx nA, nR II)
Consisting with the following Luminaires Fixtures
Ballast Tank Assembly
Series VQIF or VQ2F followed by 13, 18, 26, 265, 32, 36, 42, 52, 64 or 84; followed by 30 or 16; may be followed by NR, F, FF, TBx, P1, P2, P3 or QD.
Optics
VMG2S, VMG2S1, VMG2SF, VMR2S1, VMR2S1T, VMR2S3, VMR2S3T, VMR2S5, VMR2S5T, VMEI40, VMEP40, VZRG4020, VZRG4050, VZRP175B (VQ2F)
VMG2T, VMG2TF, VMG2T1, VMR2T1, VMR1/2T, VMR1/3, VMR1/3T, VZRG1530, VZRG2530, VZRG2520, VZRP175 (VQIF)
External Guards
VMAG2S5, VMERG, VMRWG (VQ2F)
VMAG2T, VMRWGR (VQIF)
External Reflectors
VMPSD40, VMPA40
Mounting Splice Boxes
VMX2B, VMA3B, VMF2B, VM3FB, VMX2B, VMX3B, VMX6B, VMX7B, VMX8B, VMX9B, VM828, VM838, VMC2B, VMC3B, VMD4B, VMD5B, VMS4B, VMS5B
Options
NR, F, FF, TBx, P1, P2, P3, QD
Class I, Division 2, Groups A, B, C and D; Class II, Div. 2, Groups F and G; CSA Encl 4: Temperature coded; T6 or T5.

277V max, 16W max

1. Series XXL-13/-16 is followed with alphanumeric suffixes to denote mechanical and electrical variations
2. Ambient 40 and 55C where applicable

Class I, Division 2, Groups A, B, C and D; Class II, Division 1, Groups E, F and G; Class III; Enclosure Type 4; Temperature Coded T4A or T4(Class I, Div. 2), T3C (Class II, Div. 1)
- LED luminaires for use in hazardous locations, Series MBLF, rated 277 VAC max, 23W max.

Note:
1. Series Cat. No. MBLF is followed with alphanumeric suffixes denoting electrical and mechanical variations
2. Ambient 40 and 55C where applicable

Class I, Division 1 and 2, Groups B, C, D; Class II, Division 1, Groups E, F and G; Class III; Enclosure Type 4; Temperature Coded T6
- Emergency battery system for use in hazardous locations, Series EBS230H-L rated 277 Volts maximum, 50/60 Hz; 23Watts Maximum, utilizing EBSHK1030 LED luminaires head(s) only.

Class I, Division 1 and 2, Groups C, D; Class II, Division 1, Groups E, F and G; Class III; Enclosure Type 4; Temperature Coded T6
- Emergency battery system for use in hazardous locations, Series EBS230H, rated 277 Volts maximum, 50/60 Hz; 23 Watts Maximum; utilizing EBSEL1030 LED luminaires head(s) and /or EBSHK luminaires head(s).

Class I, Division 2, Groups A, B, C and D; Class II, Division 1, Groups E, F and G; Class III; T4A, T5 or T6 (Class I, Div. 2), T3C (Class II, Div. 1), T3C (Class I, Div 2 / Class II, Div. 1 Simultaneous Exposure); Type 4X; IP66; Marine Rated:
- LED luminaires for use in hazardous locations, Series KFL, rated 480 VAC max, 125 Watts max, 50/60Hz.

Notes:
1. Series Cat. No. KFL is followed by alphanumeric suffixes denoting electrical and mechanical variations. (See Nomenclature breakdown below.)
2. Ambient 40 and 55C where applicable

Class I, Division 2, Groups A, B, C and D:
LED luminaire fittings for use in hazardous locations, Series DVL13XX, rated 277 Volts max, 13W max, DVL16XX, rated 277V max, 16W max. Temperature Coded T6, Ambient 40C; T5, Ambient 55C
Class II, Groups E, F and G; Class III
LED luminaire fittings for use in hazardous locations, Series DVL13XX, rated 277 Volts max, 13W max, DVL16XX, rated 277V max, 16W max. Temperature Coded T3B, Ambient 40C.
Incandescent and Self Ballasted Compact Fluorescent luminaire fittings for use in hazardous locations, Series DV100 Incandescent rated maximum 100W, maximum 300 Volts, Temperature Coded T3B, Ambient 40C. Series DV200 Incandescent rated maximum 200W, maximum 300 Volts, Temperature Coded T3B, Ambient 40C. Series DV100 or DV200 Self Ballasted Compact Fluorescent rated 42W 120 Volts, Temperature Coded T3B, Ambient 40C.
Notes:
1. Series DV-13/16 is followed with alphanumeric suffixes to denote mechanical and electrical variations
2. Series DV-13/16 ambient 40C and 55C where applicable.
3. Series DV is followed with alphanumeric suffixes to denote mechanical and electrical variations.

Class I, Division 2, Groups A, B, C and D; Class II, Division 1, Groups E, F and G; Class III; Enclosure Type 4X
- KILLARK Series VMCH/VM fixture mount adaptors, Model Numbers VMCH/VM and VMCH/VM-DEEP, for use with specified fixture fittings in conjunction with KILLARK Series VM Fixtures, rated 480 V max, 400 W max.; may be supplied with either Globe, Enclosed Reflector, or Reflector. For use with supply wiring rated 60C/140F or higher

Note: KILLARK VMCH/VM fixture Adaptors are for use on Listed Crouse Hinds Fixtures Cat. Nos. CM2, CM3, TWM2 and TWM3 Mounting Covers in conjunction with CSA Listed Series VM fixture fittings, rated 480 V max, 400W max.
- KILLARK Series VM fixture mount adaptors, Model Numbers VMGEH2, VMHLDS, VMHPP2, VMM2LP, VMM3KP, and SPL26748, for use with specified fixture fittings in conjunction with KILLARK Series VM fixtures, rated 480 V max, 400 W max.; may be supplied with either Globe, Enclosed Reflector, or Reflector. For use with supply wiring rated 60C/140F or higher.

Note: KILLARK VM Series fixture Adaptors are for use on Listed Crouse Hinds and Appleton Fixture Mounting Covers (See table below) in conjunction with CSA Certified / UL Listed Series VM fixture fittings, rated 480 V max, 600W max. KILLARK VMGEH2 fixture adaptors are for use with Certified/Listed General Electric Series H2 fixtures, (See Table Below for list of Cat numbers) in conjunction with Certified/Listed Series VM fixture fittings, rated 480 V max, 600W max. KILLARK VMHPP2 fixture adaptors are for use with Certified/Listed HoloPhane Series P2 (Petrolux II) Fixtures, in conjunction with Certified Series VM fixture fittings, rated 480 V max, 600W max.

Killark VM Adaptor Model	For Use With
VMGEH2	GE H2 Hi-Bay; Using fixture mounts H2000-3C, H2000-4C, H2000-3F, H2000-4F, H2000-5L H2000-6L, H2000-3P, H2000-4P, H2000-5S, H2000-6S, H2000-3W, H2000-4W, H2000-6P
VMHLDS	Thomas and Betts Hazlite M2, M3; Hazbatt H3, Hazlux2, 3. Using fixture mounts HV1, VP2, VP2, VA2, VC2, VB2, VS5 and VL5
VMHPP2	Holophane Petrolux II or Petrolux II
VMM2LP	Appleton MercMaster II Series; Using fixture mounts LPA-75/100, LPC-75/100, LPWB-75/100, LPS-125/150
VMM3KP	Appleton MercMaster II or MercMaster LED Series; Using fixture mounts KPA-75/100/M20, KPCH-75/100/M20, KPC-75/100/M20, KPWB-75/100/M20, KPS-125/150, KPST-125/150
SPL26748	Holophane Petrolux II - Using ceiling mounting cover (PETLCE)

Class I, Division 2, Groups A, B, C & D; Temperature Coded T3:
- Fluorescent Fixture for use in hazardous locations, Series NV PT, rated 277 V max, 26W max. Temperature Coded T3, Ambient 40C.
- LED Fixture for use in hazardous locations, Series NVL, rated 277 V max, 16W max. Temperature Coded T4, Ambient 40C

Class II, Division 2, Groups F and G; Class III; Type 4; Temperature Coded T4; TYPE 3, 4 AND 4X:
- Fluorescent Fixture for use in hazardous locations, Series NV PT, rated 277 V max, 26W max. Temperature Coded T4, Ambient 40C.
- Incandescent Fixture for use in hazardous locations, Series NVPI, rated 277 V max, 40W max.; or medium socket self ballasted CFL GE FLE26HT3/2RVLCD2; Temperature Coded T4, Ambient 40C.
- LED Fixture for use in hazardous locations, Series NVL, rated 277 V max, 16W max. Temperature Coded T4, Ambient 40C

Note: Alphanumeric suffixes are added to the Catalogue Number to denote electrical and mechanical variations.
Class I, Division 2, Groups A, B, C and D; Class II, Division 1, Groups E, F and G; Class III; T4A (Class I, Div. 2), T3C or T4 (Class II, Div. 1), T3C or T4 (Class I, Div 2 / Class II, Div. 1 Simultaneous Exposure); Type 4X; IPX6
- LED luminaires for use in hazardous locations, Series KFLC, rated 120-277 VAC, 50/60 Hz or 100-250 VDC or 12-24 VDC, 50 Watts max.

Notes:
1. Series Cat. No. KFLC is followed by alphanumeric suffixes denoting electrical and mechanical variations.
2. Maximum Ambient 40C or 55C as applicable (see table below for specification).

Catalog Number	Max Ambient Temp C	LED Type	Total LED Watts	Class I, Div. 2 Groups A, B, C & D	Class II, Div. 1 Groups E F & G*	Class I, Div. 2 & Class II, Div. 1 Simultaneous Exposure*	Supply Wire Temp C
KFLC5030	40	LED	50	T4A	T4	T4	75
KFLC5030	55	LED	50	T4A	T3C	T3C	90
KFLC4530	40	LED	45	T4A	T4	T4	75
KFLC4530	55	LED	45	T4A	T3C	T3C	90
KFLC4030	40	LED	40	T4A	T4	T4	75
KFLC4030	55	LED	40	T4A	T3C	T3C	90
KFLC3530	40	LED C	35	T4A	T4	T4	75
KFLC3530	55	LED C	35	T4A	T3C	T3C	90
KFLC3030	40	LED C	30	T4A	T4	T4	75
KFLC3030	55	LED C	30	T4A	T3C	T3C	90
KFLC2327	40	LED	23	T4A	T4	T4	75
KFLC2327	55	LED	23	T4A	T3C	T3C	90
KFLC2334	40	LED	23	T4A	T4	T4	75
KFLC2334	55	LED	23	T4A	T3C	T3C	90
KFLC2027	40	LED	20	T4A	T4	T4	75
KFLC2027	55	LED	20	T4A	T3C	T3C	90
KFLC2034	40	LED	20	T4A	T4	T4	75
KFLC2034	55	LED	20	T4A	T3C	T3C	90
KFLC1827	40	LED C	18	T4A	T4	T4	75
KFLC1827	55	LED C	18	T4A	T3C	T3C	90
KFLC1834	40	LED C	18	T4A	T4	T4	75
KFLC1834	55	LED C	18	T4A	T3C	T3C	90
KFLC1527	40	LED C	15	T4A	T4	T4	75
KFLC1527	55	LED C	15	T4A	T3C	T3C	90
KFLC1534	40	LED C	15	T4A	T4	T4	75
KFLC1534	55	LED C	15	T4A	T3C	T3C	90

* Fixtures with polycarbonate lenses will be restricted to 40C ambient for Class II Div. 1 environments.
Notes:
1. Class I, Division 2 ratings are based on the maximum internal junction temperature on the LED. This value is calculated using the following formula:
Maximum LED Junction Temperature (Tj) = (LED Case/ Solder Point Temperature on Cathode side (Tst)) + (Input Wattage (W) * Heat Resistance from Dice to Tst Measuring Point (Rjst) given by manufacturer)), or more simply: Tj = Tst + W*Rjst
2. Class II, Division 1 and Class I, Division 2/Class II, Division 1 Simultaneous Exposure ratings are based on the temperatures attained during the dust blanket test. The polycarbonate lens cannot be used in a dust environment

Class I, Division 1, Groups B, C and D; Class II, Division 1, Groups E, F and G; Class III; T5 or T6 (Class I, Div. 1), T3A, T3C, T4, or T4A (Class II, Div. 1); Type 3 and 4X; IP66:
- LED luminaires for use in hazardous locations, Series KFTL, rated 480 VAC max, 190 Watts max, 50/60Hz.

Notes:
1. Series Cat. No. KFTL is followed by alphanumeric suffixes denoting electrical and mechanical variations. (See Nomenclature breakdown below.)
2. Ambient 40 and 55C where applicable
3. KFFL rated 150 to 195W LED are only suitable for use in Class I, Div. 1, Groups B, C and D, @ a 40C maximum ambient as shown under the Table below.

Temperature Coded as follows:

Catalog Number	Rated Ambient Temp C	LED Type	Total LED Watts	Class I, Div. 1 Groups B, C & D	Class I, Zone 1 Groups IIA, IIB & IIC	Class II, Div. 1 Groups E F & G (Luminaire Angle / T-Code)	Supply Wire Temp C
KFIL19530/34	40	LED E	195	T5	T5	--	75
KFIL16530/34	40	LED E	165	T5	T5	--	75
KFIL15030/34	40	LED F	150	T5	T5	--	75
KFIL12533	40	LED D/E	125	T6	T6	0-180: T3C 0-135: T4 0-90 : T4A	75
KFIL12533	55	LED D/E	125	T5	T5	0-180: T3A* 0-135: T3C 0-90: T4	90
KFIL12530	40	LED D/E	125	T6	T6	0-180: T3C 0-135: T4 0-90: T4A	75
KFIL12530	55	LED D/E	125	T5	T5	0-180: T3A* 0-135: T3C 0-90: T4	90
KFIL11030	40	LED D/E	110	T6	T6	0-180: T3C 0-135: T4 0-90: T4A	75
KFIL11030	55	LED D/E	110	T5	T5	0-180: T3A* 0-135: T3C 0-90: T4	90
KFIL10630	40	LED C	105	T6	T6	0-180: T3C 0-135: T4 0-90: T4A	75
KFIL10630	55	LED C	105	T6	T6	0-180: T3A* 0-135: T3C 0-90 : T4	90
KFIL09030	40	LED C	90	T6	T6	0-180: T3C 0-135: T4 0-90: T4A	75
KFIL09030	55	LED C	90	T6	T6	0-180: T3A* 0-135: T3C 0-90: T4	90

Note: * = Groups E and F only
Class I, Div. 2, Groups A, B, C and D; Class II, Div. 1, Groups E*, F and G; Class III; Temperature Coded, T4A, T5 or T6 (where applicable); Enclosure Type 4X;
Ex nA, T4 or T5; IP66.

LED Fixture for use in hazardous locations, Series LZ2X*L, followed by 13, 18, 28, 45, 19, 28, 40, 60, 27, 34, 55, 80, 39, 50, 75120; followed by 19, 30, 33 or 34; followed by F, FF, TBLx, Px, QO, D20, D202, D25, D252, LZ2PL, LF, OS or LS; Rated 277 V AC max, 250 VDC max, 120 W max, 24 inches or 48 inches.

Notes:
1. Where X in the catalog description can either be an N denoting a molded fiberglass reinforced polyester body or an S denoting a stainless steel enclosure
2. * Class II, Groups E, F and G for Model LZ2SL only.
Class I, Division 2, Groups A, B, C and D; Class II, Division 1, Groups E, F and G; Class III; T4, T4A, or T3C Simultaneous Exposure to: Class I, Division 2, Groups A, B, C and D & Class II, Division 1, Groups E, F and G; Class III): Temperature Coded T3C or T4; Type 4X; Marine Rated; IPX6
LED luminaires for use in hazardous locations, Series KFLH, rated 120-480 VAC, 50/60 Hz 390 Watts max, 150-250VDC, 390 Watts Max
Series KFL2H, rated 120-480 VAC, 50/60 Hz 780 Watts max, 150-250VDC, 780 Watts Max

Notes:
1. Series Cat. No. KFLH/KFL2H is followed by alphanumeric suffixes denoting electrical and mechanical variations.
2. Maximum Ambient 40C or 55C as applicable (see Table I below for specification).

Catalog Number	Max Ambient Temp (°C)	LED Type	Watts	Class II, Div. 1 Groups A, B, C & D	Class II, Div. 1 Groups E F & G	Class I, Div. 2 & Class II, Div. 1 Simultaneous Exposure	Supply Wire Temp (°) C
KFLH39030	40	LED B or D	390	T3C	--	--	75
KFLH33030	40	LED B or D	330	T3C	--	--	75
KFLH30030	40	LED C or D	300	T4A	--	--	75
KFLH25030/33/34	40	LED B or D	250	T4A	T4	T4	75
KFLH25030/33/34	55	LED B or D	250	T4	T3C	T3C	90
KFLH22030/33/34	40	LED B or D	220	T4A	T4	T4	75
KFLH22030/33/34	55	LED B or D	220	T4	T3C	T3C	90
KFLH21030/33/34	40	LED A or D	220	T4A	T4	T4	75
KFLH21030/33/34	55	LED A or D	220	T4	T3C	T3C	90
KFLH17030/33/34	40	LED B or D	170	T4	T3C	T3C	90
KFLH17030/33/34	55	LED B or D	170	T4A	T4	T4	75
KFL2H78030/33	40	LED D	780	T4	--	--	75
KFL2H60030/33	40	LED D	600	T4A	--	--	75
KFL2H60030/33	55	LED D	600	T4	--	--	75
KFL2H50030/33/34	40	LED D	500	T4A	T4	T4	75
KFL2H50030/33/34	55	LED D	500	T4	T3C	T3C	90
KFL2H44030/33/34	40	LED D	440	T4A	T4	T4	75
KFL2H44030/33/34	55	LED D	440	T4	T3C	T3C	90
KFL2H42030/33/34	40	LED D	420	T4A	T4	T4	75
KFL2H42030/33/34	55	LED D	420	T4	T3C	T3C	90
KFL2H34030/33/34	55	LED D	340	T4	T4	T4	75

LED A= Nichia 219B
LED B= Cree XM-L2
LED C= Nichia 757D
LED D= Cree XP-L
Notes:
1) Class I, Division 2 ratings are based on the maximum internal junction temperature on the LED. This value is calculated using the following formula:
Maximum LED Junction Temperature (Tj) = (LED Case/ Solder Point Temperature on Cathode side (Tst)) + (Input Wattage (W) * Heat Resistance from Dice to Tst Measuring Point (Rjat) given by manufacturer)), or more simply, **Tj = Tst + W*Rjat**
Class I, Division 2, Groups A, B, C and D: Class II, Division 1, Groups E, F and G; Class III; T4A, T5 or T6 (Class I, Div. 2), T4A (Class II, Div. 1), T4A (Class I, Div 2 / Class II, Div. 1 Simultaneous Exposure); Type 4X; Type 6P; IP66; IP67
LED luminaires for use in hazardous locations, Series LAL, LALC, LALR, LALCP, LALFP, WLAL, WLALC, WLALR, WLALCR and WLALFP rated 120-480 VAC, 50/60 Hz or 100-250 VDC or 12-24 VDC, 120 Watts max.
LED emergency backup Lighting Fixtures, Series LALE, LALFNE, WLALE and WLALFNE rated 120-277, 50/60 Hz. 26 W max,
Notes:
The Series are followed by alphanumeric suffixes denoting electrical and mechanical variations.
1. Maximum Ambient 40C, 55C or 65C as applicable (see Table 1 below for specification).
2. Exit sign option is excluded from use with pendant or stanchion mount.

Operating Temperatures

	40C Ambient				55C Ambient				65C Ambient			
Wattage	Class I, Div. 2 Groups A,B,C & D; (Zone 2, Groups IIC, IIB, IIA)	Class II, Div. 1 Groups E F & G	Class I, Div. 2 & Class II, Div. 1 Simult. Exposure	Supply Wire Temp (°) C	Class I, Div. 2 Groups A,B,C & D; (Zone 2, Groups IIC, IIB, IIA)	Class II, Div. 1 Groups E F & G	Class I, Div. 2 & Class II, Div. 1 Simult. Exposure	Supply Wire Temp (°) C	Class I, Div. 2 Groups A,B,C & D; (Zone 2, Groups IIC, IIB, IIA)	Class II, Div. 1 Groups E F & G	Class I, Div. 2 & Class II, Div. 1 Simult. Exposure	Supply Wire Temp (°) C
C50	T5	T4A	T4A	90	--	--	--	--	--	--	--	--
C45	T5	T4A	T4A	75	T5	T4A	T4A	90	--	--	--	--
C40	T5	T4A	T4A	75	T5	T4A	T4A	90	--	--	--	--
C35	T5	T4A	T4A	75	T4A	T4A	T4A	90	--	--	--	--
C30	T5	T4A	T4A	75	T4A	T4A	T4A	90	--	--	--	--
C25	T5	T4A	T4A	75	T4A	T4A	T4A	90	--	--	--	--
C23	T5	T4A	T4A	75	T5	T4A	T4A	90	--	--	--	--
C20	T5	T4A	T4A	75	T5	T4A	T4A	90	--	--	--	--
C18	T5	T4A	T4A	75	T4A	T4A	T4A	90	--	--	--	--
C15	T5	T4A	T4A	75	T4A	T4A	T4A	90	--	--	--	--
120	T6	T4A	T4A	75	T5	T4A	T4A	90	--	--	--	--
75	T6	T4A	T4A	75	T5	T4A	T4A	90	--	--	--	--
50	T6	T4A	T4A	75	T5	T4A	T4A	90	--	--	--	--
39	T6	T4A	T4A	75	T5	T4A	T4A	90	--	--	--	--
80	T6	T4A	T4A	75	T5	T4A	T4A	90	--	--	--	--
55	T6	T4A	T4A	75	T5	T4A	T4A	90	T5	T4A	T4A	90
34	T6	T4A	T4A	75	T5	T4A	T4A	90	T5	T4A	T4A	90
27	T6	T4A	T4A	75	T6	T4A	T4A	75	T5	T4A	T4A	90
60	T6	T4A	T4A	75	T5	T4A	T4A	90	--	--	--	--
40	T6	T4A	T4A	75	T5	T4A	T4A	90	--	--	--	--
26	T6	T4A	T4A	75	T6	T4A	T4A	75	T5	T4A	T4A	90
19	T6	T4A	T4A	75	T6	T4A	T4A	75	T5	T4A	T4A	90
45	T6	T4A	T4A	75	T5	T4A	T4A	90	T5	T4A	T4A	90
28	T6	T4A	T4A	75	T6	T4A	T4A	75	T5	T4A	T4A	90
18	T6	T4A	T4A	75	T6	T4A	T4A	75	T5	T4A	T4A	90
13	T6	T4A	T4A	75	T6	T4A	T4A	75	T5	T4A	T4A	90

Class I, Division 1, Groups D; Class II, Division 1, Groups E, F and G; Class III; Wet Locations
Cat. Nos. EZBA-12, EACH-12, and EACH-16 Cover Adapter for use with specified fixture fittings in conjunction with KILLARK Series EZ, EZL, EMS and EBF fixtures; may be supplied with either Globe or Reflector.
Note: KILLARK EZBA-12, EACH-12, and EACH-16 Adaptors are for use on certified Crouse Hinds Mounting covers Cat. Nos. GUFX-28, EV-22 or EV67 in conjunction with CSA certified Series EZ, EZL, EMS and EBF fixture fittings.
Class I, Division 1, Groups C and D; Class II, Division 1, Groups E, F and G; Class III; Wet Locations
Cat. Nos. EAAP-C2 for use with specified fixture fittings in conjunction with KILLARK Series EZ, EZL, EMS and EBF fixtures; may be supplied with either Globe or Reflector.
Note: KILLARK EAAP-C2 Series fixture Adaptors are for use on certified Appleton Fixture Mounting Covers Cat. Nos. CAP-75, CAP-100, CAC-75, CAC-100, CALB-75, CALB-100 or CAS-150 in conjunction with CSA Certified EZ, EZL, EMS and EBF fixture fittings.

Class I, Division 1, Groups B, C and D; Class II, Division 1, Groups E, F and G; Class III; T6 (Class I, Div. 1), T5 or T6 (Class II, Div. 1); Type 3, 4 and 4X, IP66:
- LED luminaires for use in hazardous locations, Series LTL, rated 480 VAC max, 125 Watts max, 50/60Hz.

Notes:
Series Cat. No. LTL is followed by alphanumeric suffixes denoting electrical and mechanical variations.
1. Ambient 40 and 55C where applicable.

Class I, Division 2, Groups A, B, C and D; Class I, Zone 2, Groups IIC, IIB, IIA; T3C, T4A, T4,or T5; T3*;
Class II, Division 1, Groups E, F and G; T3C; T3C*;
Class III;
Encl. Type 4X; IP66
- LED luminaires for use in hazardous locations, Series KFLX, rated 480 VAC max, 560 Watts max, 50/60Hz.

Notes:
1. Series Cat. No. KFLX is followed by alphanumeric suffixes denoting electrical and mechanical variations. (See Nomenclature breakdown below.)
2. Ambient 40C, 55C and 65C where applicable
3. T3C (Class I, Div 2 / Class II, Div. 1 Simultaneous Exposure)

Contact an Expert

We're always here to help. Let's talk.
We're here to answer your questions and help you get started right away. Call or send us a message anytime.
Contact Us (https://www.csagroup.org/contact)

(https://www.csagroup.org)
FAQs (/faq/)
CSA OnDemand® (http://store.csagroup.org/ondemand/?language=en_US)
Informs & Notices (/informs-notices/)
Submit an Incident Report (/submit-a-report)
Agreement on Acceptance of Components (/agreement-acceptance-components/)
CSA Communities (http://communities.csagroup.org/home.aspx?referrer=%2f&index=0.jpg)
Product Alerts & Recalls (/product-alerts-recalls/)
Report Suspect Counterfeit Marks (/testing-certification/marks-labels/brand-protection/reporting-suspect-counterfeit-marks/)
Resources & Insights (/resources-insights/)
Standards Research (/standards/standards-research/)
CSA Group Product Listing (/testing-certification/product-listing/)
Sign up for our Newsletter (https://www.csagroup.org/newsletter/)
(http://www.facebook.com/CSAGroup)
(http://www.linkedin.com/company/csa-group)
(http://twitter.com/CSAGroup)
(http://www.youtube.com/user/CSAGroupVideos)
(https://www.csagroup.org/standards/)
© 2020 CSA Group (http://www.csagroup.org/)
Legal (https://www.csagroup.org/legal/)
Privacy Policy (https://www.csagroup.org/legal/privacy-policy/)
Evidence of Insurance (https://www.csagroup.org/legal/evidence-of-insurance/)
Intellectual Property Policy (https://www.csagroup.org/ipp-policy/)
Accreditation (https://www.csagroup.org/accreditation/)
Annual Report (https://www.csagroup.org/annual-report/)
Accessibility (https://www.csagroup.org/accessibility/)

Certification

Manufacturer: Larson Electronics LLC
Address: 9419 US-HWY 175
Kemp, Texas 75143

Declare the following equipment conforms to the standard(s) as listed:

Model: HAL-CRNM-XX-LED Series
Description: Hazardous Location LED Light

Evaluated Listings:

CE: DIRECTIVE 2014/35/EU - LOW VOLTAGE DIRECTIVE
CE: DIRECTIVE 2014/30/EU - EMC DIRECTIVE
CE: Regulation (EC) No 1907/2006 - REACH REGULATION
CE: DIRECTIVE 2015/863/EU - ROHS DIRECTIVE

The HAL-CRNM-XX-LED Series complies with the essential protection requirements of the European Parliament of the Council Directive for Low Voltage Directive, EMC Directive, REACH Regulation, and RoHS Directive. This certification applies to all specimens manufactured in accordance to the manufacture's drawings.

Signed for and on behalf of: Larson Electronics, LLC
Place of issue: Kemp, TX

Signature: James Thomas

Name: James Thomas
Position: Operations Manager

LARSON ELECTRONICS LLC • 9419 E US HWY 175 • KEMP, TX 75143
p: 1-800-369-6671 • intl: 903-498-3363 • f: 903-498-3364 • sales@larsonelectronics.com

Certification

Manufacturer: Larson Electronics LLC
Address: 9419 US-HWY 175
Kemp, Texas 75143

Declare the following equipment conforms to the standard(s) as listed:

Model: HAL-CRNM-XX-LED Series
Description: Hazardous Location LED Light

Evaluated Listings:

CE: DIRECTIVE 2015/863/EU - ROHS DIRECTIVE

This is to certify that products offered by Larson Electronics LLC comply with the Reduction of Hazardous Substances (RoHS) directives. Directive 2002/95/EC became effective on 1 July 2006. It restricts the use of six substances in the manufacture of electrical and electronic equipment. This directive was revised in June 2011 and is now referred to as directive 2011/65/EU. Directive 2015/863/EU amending Annex II to Directive 2011/65/EU announced plans to add four substances from 22 July 2019.

We hereby certify that the equipment specified above conforms to the Directive(s) by containing less of the restricted substances than the stated limits.

Signed for and on behalf of: Larson Electronics, LLC
Place of issue: Kemp, TX

Signature: 

Name: James Thomas
Position: Operations Manager

LARSON ELECTRONICS LLC • 9419 E US HWY 175 • KEMP, TX 75143
p: 1-800-369-6671 • intl: 903-498-3363 • f: 903-498-3364 • sales@larsonelectronics.com

Certification

Manufacturer: Larson Electronics LLC
Address: 9419 US-HWY 175
Kemp, Texas 75143

Declare the following equipment conforms to the standard(s) as listed:

Model: HAL-CRNM-XX-LED Series
Description: Hazardous Location LED Light

Evaluated Listings:

CE: Regulation (EC) No 1907/2006 - REACH REGULATION

This letter establishes the opinion of Larson Electronics LLC regarding the status, under the current European Union ("EU") Regulations on Registration, Evaluation, Authorization, and Restriction of Chemical Substances ("REACH").

REACH does not apply to manufactured products which are referred to as "completed articles". Substances (chemicals) are subject to REACH registration, NOT products.

In addition, Articles are exempt from the REACH requirements if (a) the Article does not contain a substance of very high concern or candidate substance in an amount exceeding 0.1% weight by weight, and (b) if substances present in the Article in excess of 1 ton per year per importer are not expected nor intended to be released.

Based on communication with our raw material suppliers, we conclude that to the best of our knowledge our products requiring REACH compliance do not contain any of the currently listed SVHC in concentrations of 0.1% or above.

Accordingly, we foresee no registration or pre-registration requirement for the products we supply.

Signed for and on behalf of: Larson Electronics, LLC
Place of issue: Kemp, TX

Signature: James Thomas

Name: James Thomas
Position: Operations Manager

LARSON ELECTRONICS LLC • 9419 E US HWY 175 • KEMP, TX 75143
p: 1-800-369-6671 • intl: 903-498-3363 • f: 903-498-3364 • sales@larsonelectronics.com

Larson Electronics LLC
9419 E US HWY 175, Kemp, TX 75143
Phone: 800.369.6671

www.LarsonElectronics.com
Email: sales@LarsonElectronics.com
Fax: 903.765.7664

Frequently Asked Questions (FAQ)

There are no Faqs