Larson Electronics LLC
9419 E US HWY 175, Kemp, TX 75143
Phone: 800.369.6671

www.LarsonElectronics.com
Email: sales@LarsonElectronics.com
Fax: 903.765.7664

LEDLB-12ET-IR

Infrared LED Light Emitter on Trunnion Mount - Extreme Environment - 12 LEDs - 36 Watts - 850/940nm

Product ID: 47100



Image: LEDLB-12ET-IR

Larson Electronics LLC manufactures a wide variety of products, including custom built to spec designs. The pictures displayed for this unit are a general representation of form factor for the product line and may not accurately represent this exact configuration in every detail due to custom builds and changes between similar products in our standard catalog. The specifics for this configuration are listed in the specification table and supporting documentation (CAD files, Dimensional Drawing, Name Plate Diagram, Wiring Diagram, etc.). This means that specific details (receptacles, plugs, wires, connections, mounting brackets, external finishes, etc.) may not be accurately represented in images vs specifications. Please review specifications and do not order based solely on images.

LEDLB-12ET-IR LED Light Bar

LEDs: 12 Edixeon® 3 Watt LED Emitters
Dimensions: 8.25"-L 3"-H 3.56"-D
Watts: 36
Voltage: 9-42 VDC
Spot Beam: 550`L x 70`W
Flood Beam: 120`L x 100`W
Weight: 4.6 Lbs
Lighting Configuration: 10° Spot or 35° Flood
Mounting: Trunnion Bracket
Wiring: Deutsch IPD / LADD DT04-2P connector
Amps: 3 (on 12 volts) 1.5 (on 24 volts)
Megawatts: 3,600
LED Light Color: 850 or 940Nm Infrared
LED Life Expectancy: 50,000 hours
Optics Efficiency: 90%
Materials: Aluminum Housing, Polycarbonate Lens
Housing Colors: Black or White

LEDLB LED Features

Edixeon® 3 Watt LED Emitters
LEDs Driven At 80%
-40 C~ +80C Operating Temp Range
RoHS Compliant
LED Chip Op Temp -40C to +125C
IP68 Rated Waterproof to 3 meters
CE Certified

Special Orders - Special Requirements

Contact us for special requirements
Toll Free: 1-800-369-6671
Intl: 1-903-270-1187
E-mail: sales@larsonelectronics.com

Buy American Compliant

The Larson Electronics LEDLB-12ET-IR LED Light Bar offers high light output and

extreme durability combined with a versatile trunnion mounting system that provides 270 degrees of adjustability. This IP68 rated infrared LED light bar is waterproof to three feet and produces a 3,600mW infrared light beam that can only be seen through the use of night vision goggles. 850Nm versions have a very slight red glow around the LED emitters when viewed from a certain angle while 940Nm versions are completely invisible to the naked eye. This light can run on any voltage from 9 to 42 volts and provides an extremely rugged infrared lighting solution that is ideal for use in commercial and industrial security applications as well as military environments.

Click here to see the LED version of this

The LEDLB-12E-IR LED infrared light bar from Larson Electronics produces 3,600mW and a 550` long by 70` wide infrared light beam. Twelve Edixeon® three Infrared Emitters LED`s producing 300mW each are paired with high purity 10° degree optics to produce a tightly focused spot beam with limited spread or light spillage. We also offer optional floodlight versions with 35° degree optics to produce a wider beam spread and more light over a larger area nearer the fixture. These infrared LED light bars are IP68 rated and waterproof to three meters, sealed against intrusion by dust and dirt and ruggedly constructed to withstand the most demanding environments, conditions and applications.

The entire Larson Electronics LEDLB-E series are constructed of extruded aluminum and feature heavier housings, rubber isolated mounts and unbreakable polycarbonate lenses to provide increased durability against vibrations, impacts, waves, hard rains, sand and high winds.

LEDLB-12ET-IR 35° Flood Beam (Opt)



LEDLB-12ET-IR 10° Spot Beam (Stnd)

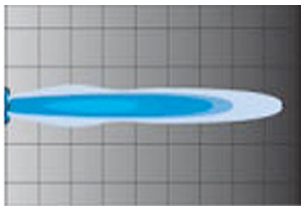

Heat Management: Heat is the single largest factor in premature LED failure and color shifting. As a result, many manufacturers reduce the output of their LEDs to reduce the amount of heat produced. These LED light bars utilize an extruded aluminum housing that incorporates an advanced heat radiating fin design which dissipates heat efficiently to produce the maximum amount of power and longevity from the integrated Edison Edixeon® Emitters. The end result is more light and longer LED life of 50,000 hours.

Voltage Control: These units are able to monitor and adjust input current to maintain the correct LED voltage levels regardless of input levels across a specific range. These LEDLB series light bars can operate on current ranging from 9 to 42VDC without any modifications necessary as a result. This multi-voltage capability makes these units ideal for mobile and

standalone applications such as those found on commercial boats, heavy equipment and vehicles where power systems don't always operate with 12 volts and external generators, transformers or inverters are impractical.

Click here to view an article on the Generations of Night Vision and Infrared.

Durability: The LEDLB-E series of LED light bars from Larson Electronics offer IP68 rated construction that is designed to withstand extremes of environmental and operating conditions. The LED lights with the 'E' part number designation are designed for extreme durability and are larger and heavier than the standard LEDLB series lights and are nearly twice as heavy as their standard counterparts. These units can withstand rapid temperature changes of -40 degrees Celsius to 85 degrees Celsius, are waterproof to three meters and resist ingress of dust, dirt and humidity. The housings are formed from thick extruded aluminum and the lenses are unbreakable polycarbonate. The Edixeon® LEDs offer inherent LED resistance to shocks and vibrations contributing to these units 15.6Grms rating of vibration tolerance. We recommend these LED lights for high stress - high vibratory conditions, high humidity climates, very cold areas and rough saltwater conditions. They are also well suited to environments where equipment is used in one temperature extreme and stored in another temperature extreme.

Adjustable Trunnion Mounting: The trunnion mounting design on the LEDLB-20ET-IR allows for post-installation angle positioning. This means that by loosening 2 thumb bolts located on either side of the light, the operator can adjust the positioning angle of this light 270 degrees. Then he/she would simply have to tighten thumb bolts to lock the angle in place. No tools are required for adjusting angle. We also offer a BC-2 bar clamp mounting system you can view here for even greater mounting versatility.

Note: Most Larson Electronics LEDLB, LEDP3W, LEDP10W, and LED10W series LED spotlights and floodlights are terminated with a Deutsch IPD / LADD DT04-2P connector. The mating connector plug is DT06-2S. Most LEDLB and LED10W series lights ship with mating connector as part of a harness or pigtail, depending on the model. Some larger LED lights like the LEDLB-160X2 or LEDLB-200X2 or multiple function LED lights (i.e. high/low beam, modulating, IR/Visible combos) will have different Deutsch connectors.

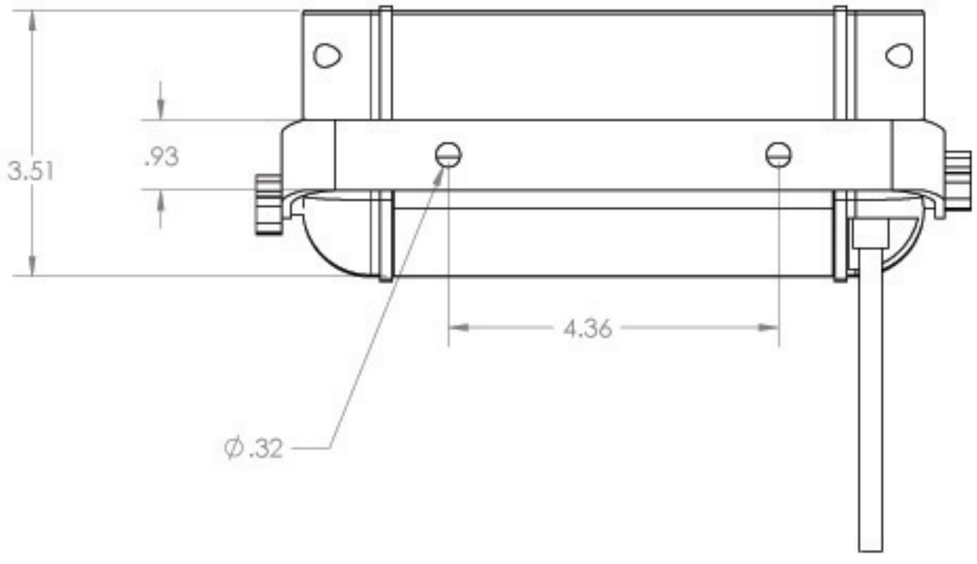

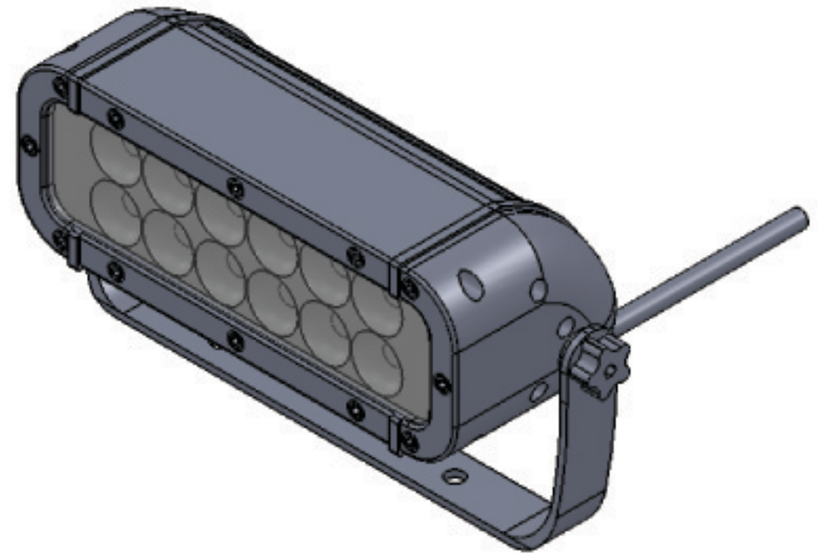

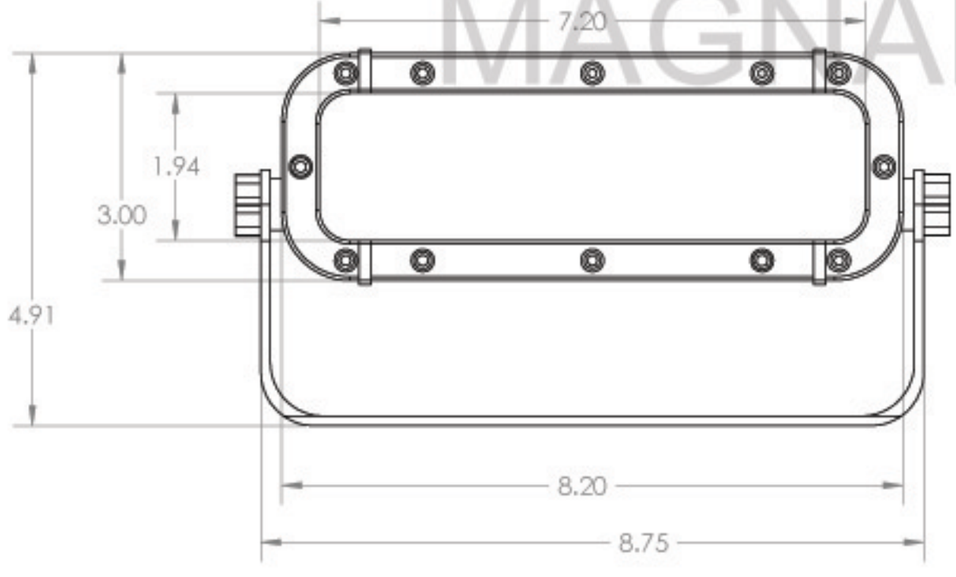

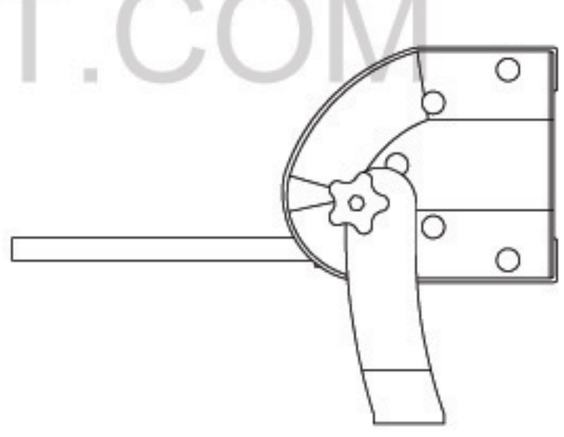

MAGNALIGHT.COM

		UNLESS OTHERWISE SPECIFIED:		NAME	DATE
		DIMENSIONS ARE IN INCHES TOLERANCES: FRACTIONAL ± ANGULAR: MACH ± BEND ± TWO PLACE DECIMAL ± THREE PLACE DECIMAL ±	DRAWN		
			CHECKED		
			ENG APPR.		
			MFG APPR.		
		INTERPRET GEOMETRIC TOLERANCING PER:	Q.A.		
		MATERIAL	COMMENTS:		
NEXT ASSY	USED ON	FINISH			
APPLICATION		DO NOT SCALE DRAWING			

PROPRIETARY AND CONFIDENTIAL

THE INFORMATION CONTAINED IN THIS DRAWING IS THE SOLE PROPERTY OF Magnalight.com. ANY REPRODUCTION IN PART OR AS A WHOLE WITHOUT THE WRITTEN PERMISSION IS PROHIBITED.

Magnalight.com

TITLE:

LEBLB-12ET

SIZE	DWG. NO.	REV
B	LEBLB-12ET	

SCALE: 1:4 | WEIGHT: | SHEET 1 OF 1

Larson Electronics LLC
9419 E US HWY 175, Kemp, TX 75143
Phone: 800.369.6671

www.LarsonElectronics.com
Email: sales@LarsonElectronics.com
Fax: 903.765.7664



Larson Electronics LLC
9419 E US HWY 175, Kemp, TX 75143
Phone: 800.369.6671

www.LarsonElectronics.com
Email: sales@LarsonElectronics.com
Fax: 903.765.7664



Larson Electronics LLC
9419 E US HWY 175, Kemp, TX 75143
Phone: 800.369.6671

www.LarsonElectronics.com
Email: sales@LarsonElectronics.com
Fax: 903.765.7664



Larson Electronics LLC
9419 E US HWY 175, Kemp, TX 75143
Phone: 800.369.6671

www.LarsonElectronics.com
Email: sales@LarsonElectronics.com
Fax: 903.765.7664



Material Safety Data Sheet

To Whom It May Concern,

The Larson Electronics LLC LEDLB, LED3W, LED5W, LED10W, LEDP, and LEDxxWRE industrial line of LED light bars and light fixtures without emergency battery backup are considered "ARTICLES" under 29 CFR 1910-1200, the OSHA Hazard Communication Standard, and do not require a Material Safety Data Sheet (MSDS). This document does not expire.

Articles are specifically exempt from the regulations of this standard. OSHA defines an article as follows:

1910-1200(c) – Article means a manufactured item other than a fluid or particle:

i. Which is formed to a specific shape or design during manufacture;
ii. Which has end use function(s) dependent in whole or in part upon its shape or design during end use; and
iii. Which under normal conditions does not release more than very small quantities.

Regards,

Ray Smith
Larson Electronics, LLC.

LARSON ELECTRONICS LLC • 9419 E US HWY 175 • KEMP, TX 75143
p: 1-800-369-6671 • intl: 903-498-3363 • f: 903-498-3364 • sales@larsonelectronics.com

Certification

Manufacturer: Larson Electronics LLC
Address: 9419 US-HWY 175
Kemp, Texas 75143

Declare the following equipment conforms to the standard(s) as listed:

Model: LEDLB, LED3W, LED5W, LED10W, LEDP, and LEDxxWRE Series
Description: LED Light Bars

Evaluated Listings:

CE: DIRECTIVE 2014/35/EU - LOW VOLTAGE DIRECTIVE
CE: DIRECTIVE 2014/30/EU - EMC DIRECTIVE
CE: Regulation (EC) No 1907/2006 - REACH REGULATION
CE: DIRECTIVE 2015/863/EU - ROHS DIRECTIVE

The LEDLB, LED3W, LED5W, LED10W, LEDP, and LEDxxWRE series complies with the essential protection requirements of the European Parliament of the Council Directive for Low Voltage Directive, EMC Directive, REACH Regulation, and RoHS Directive. This certification applies to all specimens manufactured in accordance to the manufacture's drawings.

Signed for and on behalf of: Larson Electronics, LLC
Place of issue: Kemp, TX

Signature: James Thomas

Name: James Thomas
Position: Operations Manager

LARSON ELECTRONICS LLC • 9419 E US HWY 175 • KEMP, TX 75143
p: 1-800-369-6671 • intl: 903-498-3363 • f: 903-498-3364 • sales@larsonelectronics.com

Certification

Manufacturer: Larson Electronics LLC
Address: 9419 US-HWY 175
Kemp, Texas 75143

Declare the following equipment conforms to the standard(s) as listed:

Model: LEDLB, LED3W, LED5W, LED10W, LEDP, and LEDxxWRE
Description: LED Light Bars

Evaluated Listings:

CE: DIRECTIVE 2015/863/EU - ROHS DIRECTIVE

This is to certify that products offered by Larson Electronics LLC comply with the Reduction of Hazardous Substances (RoHS) directives. Directive 2002/95/EC became effective on 1 July 2006. It restricts the use of six substances in the manufacture of electrical and electronic equipment. This directive was revised in June 2011 and is now referred to as directive 2011/65/EU. Directive 2015/863/EU amending Annex II to Directive 2011/65/EU announced plans to add four substances from 22 July 2019.

We hereby certify that the equipment specified above conforms to the Directive(s) by containing less of the restricted substances than the stated limits.

Signed for and on behalf of: Larson Electronics, LLC
Place of issue: Kemp, TX

Signature: James Thomas

Name: James Thomas
Position: Operations Manager

LARSON ELECTRONICS LLC • 9419 E US HWY 175 • KEMP, TX 75143
p: 1-800-369-6671 • intl: 903-498-3363 • f: 903-498-3364 • sales@larsonelectronics.com

Certification

Manufacturer: Larson Electronics LLC
Address: 9419 US-HWY 175
Kemp, Texas 75143

Declare the following equipment conforms to the standard(s) as listed:

Model: LEDLB, LED3W, LED5W, LED10W, LEDP, and LEDxxWRE Series
Description: LED Light Bars

Evaluated Listings:

CE: Regulation (EC) No 1907/2006 - REACH REGULATION

This letter establishes the opinion of Larson Electronics LLC regarding the status, under the current European Union ("EU") Regulations on Registration, Evaluation, Authorization, and Restriction of Chemical Substances ("REACH").

REACH does not apply to manufactured products which are referred to as "completed articles". Substances (chemicals) are subject to REACH registration, NOT products.

In addition, Articles are exempt from the REACH requirements if (a) the Article does not contain a substance of very high concern or candidate substance in an amount exceeding 0.1% weight by weight, and (b) if substances present in the Article in excess of 1 ton per year per importer are not expected nor intended to be released.

Based on communication with our raw material suppliers, we conclude that to the best of our knowledge our products requiring REACH compliance do not contain any of the currently listed SVHC in concentrations of 0.1% or above.

Accordingly, we foresee no registration or pre-registration requirement for the products we supply.

Signed for and on behalf of: Larson Electronics, LLC
Place of issue: Kemp, TX

Signature: James Thomas

Name: James Thomas
Position: Operations Manager

LARSON ELECTRONICS LLC • 9419 E US HWY 175 • KEMP, TX 75143
p: 1-800-369-6671 • intl: 903-498-3363 • f: 903-498-3364 • sales@larsonelectronics.com

Larson Electronics LLC
9419 E US HWY 175, Kemp, TX 75143
Phone: 800.369.6671

www.LarsonElectronics.com
Email: sales@LarsonElectronics.com
Fax: 903.765.7664

Frequently Asked Questions (FAQ)

There are no Faqs