Larson Electronics LLC
9419 E US HWY 175, Kemp, TX 75143
Phone: 800.369.6671

www.LarsonElectronics.com
Email: sales@LarsonElectronics.com
Fax: 903.498.3364

LED30W-PAR38-277V

25 Watt LED PAR 38 Spot / Flood Light - 2500 Lumens - 277 Volts AC

Product ID: 46991



Larson Electronics LLC manufactures a wide variety of products, including custom built to spec designs. The pictures displayed for this unit are a general representation of form factor for the product line and may not accurately represent this exact configuration in every detail due to custom builds and changes between similar products in our standard catalog. The specifics for this configuration are listed in the specification table and supporting documentation (CAD files, Dimensional Drawing, Name Plate Diagram, Wiring Diagram, etc.). This means that specific details (receptacles, plugs, wires, connections, mounting brackets, external finishes, etc.) may not be accurately represented in images vs specifications. Please review specifications and do not order based solely on images.

LED30W-PAR38-277V AC LED
Lamp Type: LED
Watts: 25
Lumens: 2500
Dimensions: 4.79" (121.65mm) OD 4.74" (120.32mm) Total Height- 3.61" (91.64mm)
Voltage: 277 VAC 60Hz
Color: White (Red, Green, Blue, Amber, and Infrared also available. There may be longer lead times on specialty colors)

CRI: >84 (White)

Operating Temp: -20C to 85C

Materials: Aluminum Housing - Polycarbonate Lens

Dimmable: Yes

Beam Pattern: 25° Spot OR 60° Flood

Features
ETL Listed
50,000 Hour Life Rating
Direct Replacement for PAR38 Bulbs
Rough Service

Special Orders- Requirements

Contact us for special requirements

Toll Free: 1-800-369-6671

Intl: 1-903-270-1187

E-mail: sales@larsonelectronics.com

The Larson Electronics LED30W-PAR38-277V 25 Watt LED Style Bulb is designed to fit in standard light bulb sockets and provides durability, multi color options, and rough service that makes it ideal for industrial and commercial applications. This 25 watt LED replacement bulb provides 2500 lumens.

The LED30W-PAR38-277V is an LED light bulb that can serve as a PAR38 LED upgrade from standard light bulbs fitting E26 bulb sockets. Utilizing only 25 Watts and designed to operate with 277 Volts AC, this lamp provides higher efficiency than traditional incandescent PAR38 bulbs and is a direct fit replacement. The light output is comparable to a 150 watt incandescent PAR38 bulb.
The LED30W-PAR38-277V is the ideal upgrade and/or replacement for security

flood lights around the home or business. This bulb produces nearly 20% more light at 10 feet than a standard 300 watt A19 rough service bulb. Combined with a "pure white" color output, this bulb is ideal for improving the light output of hand lamps, drop lights, and other standard incandescent lighting within industrial applications.

This lamp has an acceptable operating temperature range of -20C to 85C and an operational life of 50,000 hours. The solid state design of this lamp means it is resistant to the effects of impacts and vibrations, providing adding durability to withstand conditions that would cause a normal incandescent bulb to fail. The overall dimensions of the remote controlled LED light are the same as a standard PAR38 incandescent lamp, and the base is constructed of aluminum for durability and resistance to rust and corrosion.

This PAR38 LED replacement lamp is dimmable on 277V AC to 50% light output. When paired with the Leviton Illumatech IPX06-70Z dimmer switch, the lamps will dim from 100% down to 50%. Dimming below 50% light output will shut the LED bulb off. Results may vary with other model dimmer switches.

The PAR38 is the same base and dimensions as a standard PAR38 incandescent light bulb. You can use this LED light bulb as a replacement for a standard outdoor flood lamp in your home. However, given the durability and longevity, we also see this LED light bulb as an ideal solution for a variety of industrial uses. As such, this LED light bulb can provide additional safety measures and time savings, given the low heat production and that it does not require replacing for 50,000 hours. Since the LED bulb uses solid state technology, the vibration (dropping, etc.) that degrades conventional incandescent bulbs is not an issue with these LED bulbs.

Energy Consumption Comparison (Ten Lamps)

	Incandescent	CFL	LED
Wattage	1500 watts	420 watts	250 watts
Amp Draw @ 277V AC	5.42 amps	1.52 amps	0.9 amps
Lamp Life Expectancy	1,875 hours	10,000 hours	50,000 hours
Color Temperature	2850K	4300K	6000K
Operation cost per year (8hs/day @ 11c/kWh)	$481.80	$134.91	$80.30

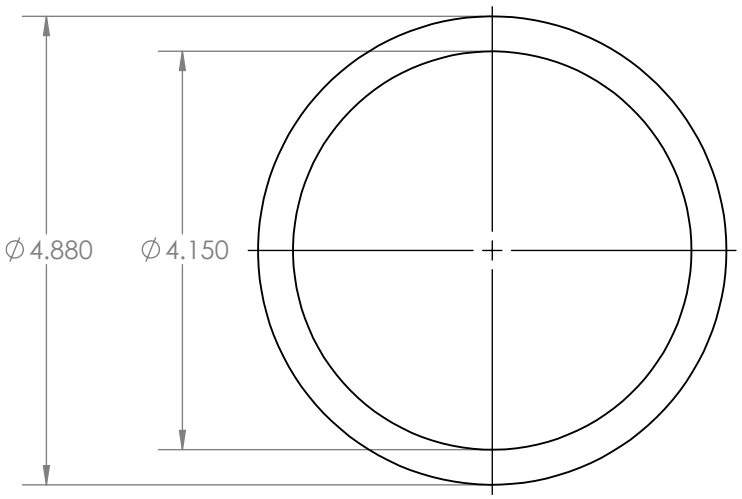

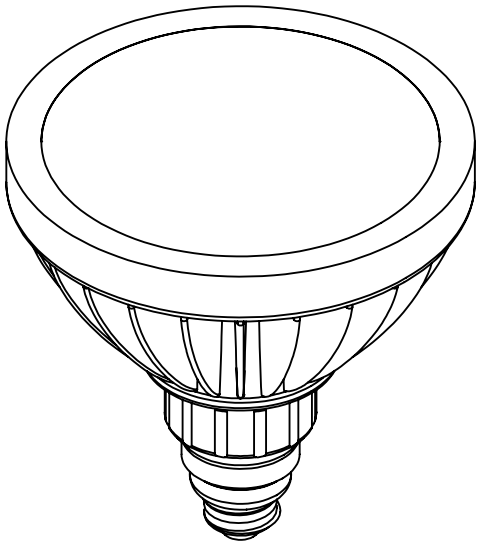

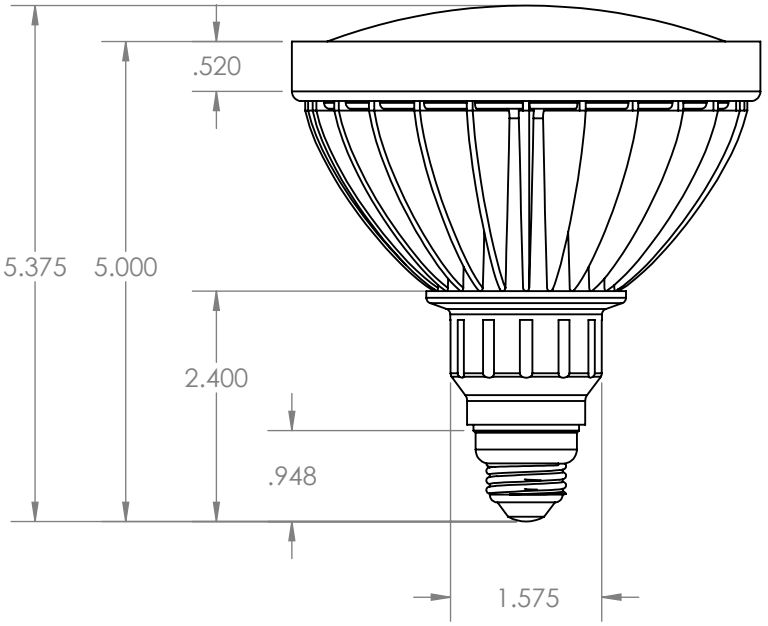

LARSON ELECTRONICS

TITLE:

LED30W-PAR38-277V

PROPRIETARY AND CONFIDENTIAL
THE INFORMATION CONTAINED IN THIS DRAWING IS THE SOLE PROPERTY OF LARSON ELECTRONICS LLC. ANY REPRODUCTION IN PART OR AS A WHOLE WITHOUT THE WRITTEN PERMISSION OF LARSON ELECTRONICS LLC IS PROHIBITED.

		NAME
DIMENSIONS ARE IN INCHES	DRAWN	CHRIS THAUER
MATERIAL	CHECKED	JEREMY BLANKENSHIP
DO NOT SCALE DRAWING		

SIZE	DWG. NO.	REV
A		

SCALE: 1:2 SHEET 1 OF 1

5 4 3 2 1


03







Frequently Asked Questions (FAQ)