Larson Electronics LLC
9419 E US HWY 175, Kemp, TX 75143
Phone: 800.369.6671

www.LarsonElectronics.com
Email: sales@LarsonElectronics.com
Fax: 903.498.3364

LEDLB-4ET

LED Light Emitter on Trunnion Wall Mount - Extreme Environment - 12 Watt - 90'L X 70'W Beam- 9-42VDC

Product ID: 46867



Larson Electronics LLC manufactures a wide variety of products, including custom built to spec designs. The pictures displayed for this unit are a general representation of form factor for the product line and may not accurately represent this exact configuration in every detail due to custom builds and changes between similar products in our standard catalog. The specifics for this configuration are listed in the specification table and supporting documentation (CAD files, Dimensional Drawing, Name Plate Diagram, Wiring Diagram, etc.). This means that specific details (receptacles, plugs, wires, connections, mounting brackets, external finishes, etc.) may not be accurately represented in images vs specifications. Please review specifications and do not order based solely on images.

LEDLB-4ET LED Light Bar

LEDs: 4 Edixeon® 3 Watt LED Emitters
Dimensions: 4"-L 3"-H 3.56"-D
Watts: 12

Voltage: 9-42 VDC
Spot Beam: 90`L x 70`W
Flood Beam: 70` L x 60`W

Weight: 2.4 Lbs
Lighting Configuration: 10° Spot or 35° Flood

Mounting: Adjustable Trunnion

Wiring: Deutsch IPD / LADD DT04-2P connector

Amps: 1 (on 12 volts) .5 (on 24 volts)

Lumens: 720
LED Light Color: 6000K or 3000K

LED Life Expectancy: 50,000 hours

Optics Efficiency: 90%

Materials: Aluminum Housing, Polycarbonate Lens

Housing Colors: Black or White
Lux-Flood : @Lens: 185,800 @ 1 Meter 2,672
Lux-Spot : @Lens: 190,400 @ 1 Meter 8,440
CE Certified
3 year warranty replacement on this LED light. After 30 days, the customer ships the failed LED light and/or LED bulb to Larson Electronics at their expense. If the failure is a manufacturer defect, we will ship a new replacement to the customer. If failure occurs

LEDLB LED Features

Edixeon® 3 Watt LED Emitters
LEDs Driven At 80%
-40 C~ +80C Operating Temp Range

RoHS Compliant

70% Lumen Retention @65,000 hours
LED Chip Op Temp -40C to +125C
IP68 Rated Waterproof to 3 meters

Special Orders - Special Requirements

Contact us for special requirements

Toll Free: 1-800-369-6671

Intl: 1-214-616-6180

E-mail: sales@larsonelectronics.com

within 30 days of receipt, Larson Electronics will provide a return label via email to the customer. When the failed light is returned, Larson Electronics will ship a new replacement.

Buy American Compliant

The Larson Electronics LEDLB-4ET LED Light Bar offers high light output and extreme durability combined with a versatile trunnion wall mounting system that provides 270 degrees of adjustability. This IP68 rated LED light bar is waterproof to three meters and produces 720 lumens while drawing only 12 watts of power @1 amp from a 12 volt electrical system. This light can run on any voltage from 9 to 42 volts and provides an extremely rugged lighting solution that is ideal for use in commercial marine environments as well as industrial and manufacturing applications such as machine vision system lighting, heavy equipment illumination, blasting lighting and mining operations.

The LEDLB-4ET LED light bar from Larson Electronics produces a 90` long by 70` wide light beam with 720 lumens of bright light. Four Edison Edixeon® Emitters containing CREE EZBright® three watt LEDs producing 180 lumens each are arranged in rows and paired with high purity 10 degree optics to produce a tightly focused spot beam with limited spread or light spillage. We also offer optional floodlight versions with 35 degree optics to produce a wider beam spread and more light over a larger area nearer the fixture, making flood versions ideal for use as work and area lights. These LED light bars are IP68 rated and waterproof to 3 meters, sealed against intrusion by dust and dirt and very ruggedly constructed to withstand the most demanding environments, conditions and applications. The entire Larson Electronics LEDLB-E series are constructed of extruded aluminum and feature heavier housings, rubber isolated mounts and unbreakable polycarbonate lenses to provide increased durability against vibrations, impacts, waves, hard rains, sand and high winds. This light is equipped with a trunnion mounting bracket that allows operators to adjust the light fixture through 270 degrees of movement.

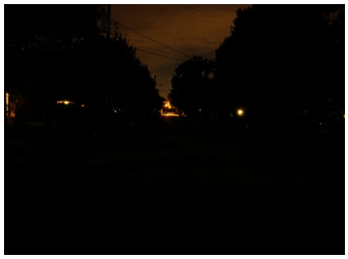

This image shows a dark street, illuminated by nothing but distant street lamps and suburban lighting.

Click Photo to Enlarge



The same street illuminated with the LEDLB-4ET, easily reaching distances of 90` in length and 70` in width. .

Click Photo to Enlarge

*We have had excellent feedback from boat builders and other marine applications where they are able to create lighting effects on the mast, etc. that typically cost 10 times as much but with little amp draw. Technically, the specification indicates a 1 amp draw per unit but the feedback we are getting indicates the draw is substantially less. One boat builder in Houston indicated that the total draw of 12 units was under 2 amps. The efficiency of the driver board makes this type of amp draw attractive for current constrained applications including small equipment, ATVs, boats and other applications where banks of batteries without significant alternator support are the sole source of power. These units are also ideal for use in manufacturing and industrial operations as machine lighting where severe vibration and excessive amounts of dirt and grime may be encountered.

Heat Management: Heat is the single largest factor in premature LED failure and color shifting. As a result, many manufacturers reduce the output of their LEDs to reduce the amount of heat produced. These LED light bars utilize an extruded aluminum housing that incorporates an advanced heat radiating fin design which dissipates heat efficiently to produce the maximum amount of power and longevity from the integrated Edison Edixeon® Emitters. The end result is more light and longer LED life with higher average lumen maintenance after 50,000 hours.

Voltage Control: These units are able to monitor and adjust input current to maintain the correct LED voltage levels regardless of input levels across a specific range. These LEDLB series light bars can operate on current ranging from 9 to 42VDC without any modifications necessary as a result. This multi-voltage capability makes these units ideal for mobile and standalone applications such as those found on

commercial boats, heavy equipment and vehicles where power systems don't always operate with 12 volts and external generators, transformers or inverters are impractical.

LEDLB-4ET 35° Flood Beam (Opt)



LEDLB-4ET 10° Spot Beam (Stnd)

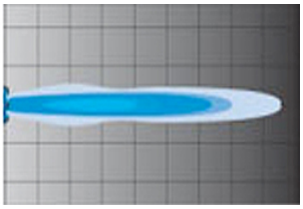

Durability: The LEDLB-E series of LED light bars from Larson Electronics offer IP68 rated construction that is designed to withstand extremes of environmental and operating conditions. The LED lights with the 'E' part number designation are designed for extreme durability and are larger and nearly twice as heavy as their standard counterparts. These units can withstand rapid temperature changes of -40 degrees Celsius to 85 degrees Celsius, are waterproof to three meters and resist ingress of dust, dirt and humidity. The housings are formed from thick extruded aluminum and the lenses are unbreakable polycarbonate. The Edixeon® LEDs offer inherent LED resistance to shocks and vibrations contributing to these units 15.6Grms rating of vibration tolerance. We recommend these LED lights for high stress - high vibratory conditions, high humidity climates, very cold areas and rough saltwater conditions. They are also well suited to environments where equipment is used in one temperature extreme and stored in another temperature extreme.
Adjustable Mounting: The trunnion wall mounting design on the LEDLB-4ET allows for post-installation angle positioning. This means that by loosening 2 thumb bolts located on either side of the light, the operator can adjust the positioning angle of this light 270 degrees. Then he/she would simply have to tighten thumb bolts to lock the angle in place. No tools are required for adjusting angle. We also offer a BC-2 bar clamp mounting system you can view here for even greater mounting versatility.
Note: Most Larson Electronics LEDLB, LEDP3W, LEDP10W, and LED10W series LED spotlights and floodlights are terminated with a Deutsch IPD / LADD DT04-2P connector. The mating connector plug is DT06-2S. Most LEDLB and LED10W series lights ship with mating connector as part of a harness or pigtail, depending on the model. Some larger LED lights like the LEDLB-160X2 or LEDLB-200X2 or multiple function LED lights (i.e. high/low beam, modulating, IR/Visible combos) will have different Deutsch connectors. You can view the Deutsch Connector technical details here.

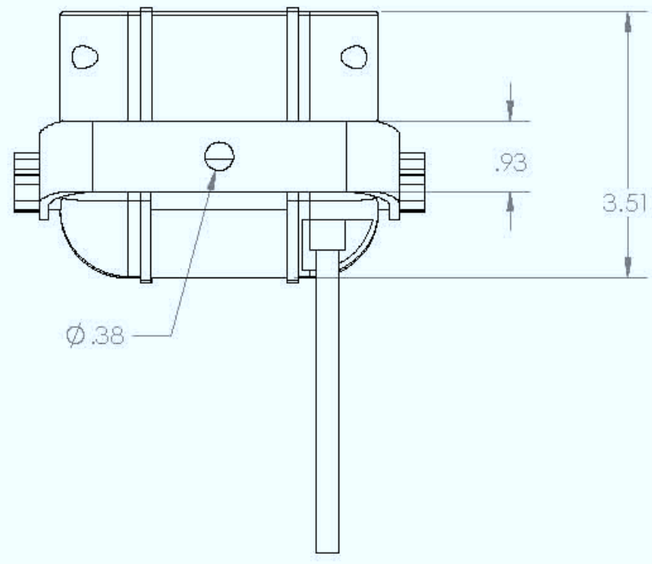

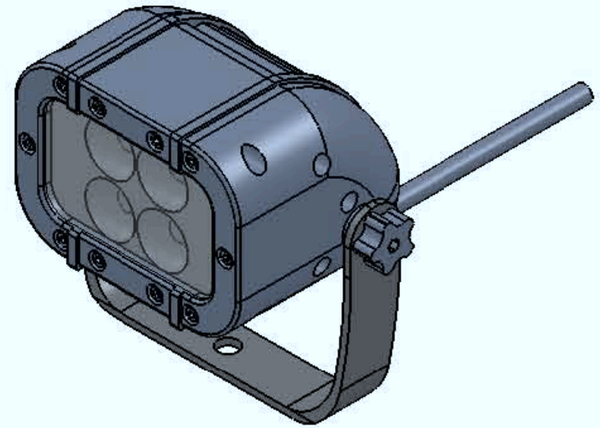

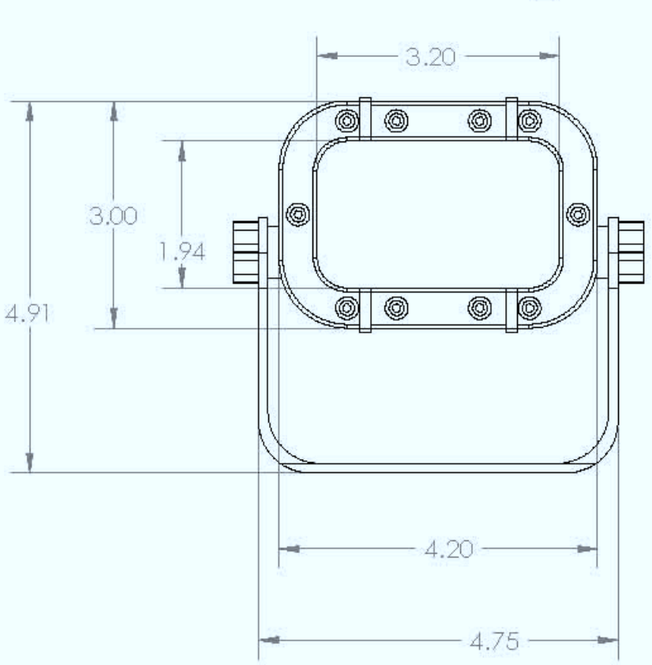

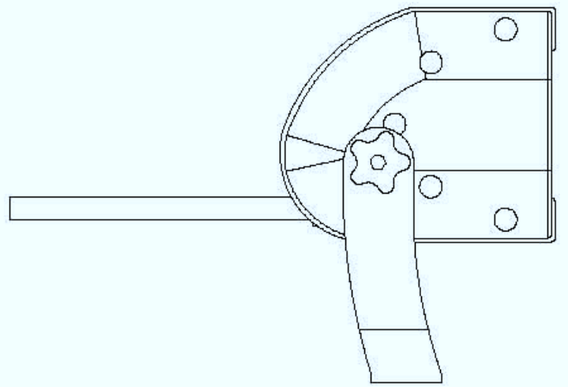

PROPRIETARY AND CONFIDENTIAL

THE INFORMATION CONTAINED IN THIS DRAWING IS THE SOLE PROPERTY OF Magnalight.com
ANY REPRODUCTION IN PART OR AS A WHOLE
WITHOUT THE WRITTEN PERMISSION IS PROHIBITED.

NEXT ASSY	USED ON
APPLICATION	

UNLESS OTHERWISE SPECIFIED:

DIMENSIONS ARE IN INCHES
TOLERANCES:
FRACTIONAL ±
ANGULAR: MACH ± BEND ±
TWO PLACE DECIMAL ±
THREE PLACE DECIMAL ±

INTERPRET GEOMETRIC TOLERANCING PER:

MATERIAL

FINISH

DO NOT SCALE DRAWING

	NAME	DATE
DRAWN		
CHECKED		
ENG APPR.		
MFG APPR.		
Q.A.		
COMMENTS:		

Magnalight.com

TITLE:

LEDLB-4ET

SIZE	DWG. NO.	REV
B		

SCALE: 1:4 | WEIGHT: | SHEET 1 OF 1






MISTER

Material Safety Data Sheet

To Whom It May Concern,

The Larson Electronics LLC LEDLB, LED3W, LED5W, LED10W, LEDP, and LEDxxWRE industrial line of LED light bars and light fixtures without emergency battery backup are considered "ARTICLES" under 29 CFR 1910-1200, the OSHA Hazard Communication Standard, and do not require a Material Safety Data Sheet (MSDS). This document does not expire.

Articles are specifically exempt from the regulations of this standard. OSHA defines an article as follows:

1910-1200(c) – Article means a manufactured item other than a fluid or particle:

i. Which is formed to a specific shape or design during manufacture;
ii. Which has end use function(s) dependent in whole or in part upon its shape or design during end use; and
iii. Which under normal conditions does not release more than very small quantities.

Regards,

Ray Smith
Larson Electronics, LLC.

LARSON ELECTRONICS LLC • 9419 E US HWY 175 • KEMP, TX 75143
p: 1-800-369-6671 • intl: 903-498-3363 • f: 903-498-3364 • sales@larsonelectronics.com

Certification

Manufacturer: Larson Electronics LLC
Address: 9419 US-HWY 175
Kemp, Texas 75143

Declare the following equipment conforms to the standard(s) as listed:

Model: LEDLB, LED3W, LED5W, LED10W, LEDP, and LEDxxWRE Series
Description: LED Light Bars

Evaluated Listings:

CE: DIRECTIVE 2014/35/EU - LOW VOLTAGE DIRECTIVE
CE: DIRECTIVE 2014/30/EU - EMC DIRECTIVE
CE: Regulation (EC) No 1907/2006 - REACH REGULATION
CE: DIRECTIVE 2015/863/EU - ROHS DIRECTIVE

The LEDLB, LED3W, LED5W, LED10W, LEDP, and LEDxxWRE series complies with the essential protection requirements of the European Parliament of the Council Directive for Low Voltage Directive, EMC Directive, REACH Regulation, and RoHS Directive. This certification applies to all specimens manufactured in accordance to the manufacture's drawings.

Signed for and on behalf of: Larson Electronics, LLC
Place of issue: Kemp, TX

Signature: James Thomas

Name: James Thomas
Position: Operations Manager

LARSON ELECTRONICS LLC • 9419 E US HWY 175 • KEMP, TX 75143
p: 1-800-369-6671 • intl: 903-498-3363 • f: 903-498-3364 • sales@larsonelectronics.com

Certification

Manufacturer: Larson Electronics LLC
Address: 9419 US-HWY 175
Kemp, Texas 75143

Declare the following equipment conforms to the standard(s) as listed:

Model: LEDLB, LED3W, LED5W, LED10W, LEDP, and LEDxxWRE
Description: LED Light Bars

Evaluated Listings:

CE: DIRECTIVE 2015/863/EU - ROHS DIRECTIVE

This is to certify that products offered by Larson Electronics LLC comply with the Reduction of Hazardous Substances (RoHS) directives. Directive 2002/95/EC became effective on 1 July 2006. It restricts the use of six substances in the manufacture of electrical and electronic equipment. This directive was revised in June 2011 and is now referred to as directive 2011/65/EU. Directive 2015/863/EU amending Annex II to Directive 2011/65/EU announced plans to add four substances from 22 July 2019.

We hereby certify that the equipment specified above conforms to the Directive(s) by containing less of the restricted substances than the stated limits.

Signed for and on behalf of: Larson Electronics, LLC
Place of issue: Kemp, TX

Signature: James Thomas

Name: James Thomas
Position: Operations Manager

LARSON ELECTRONICS LLC • 9419 E US HWY 175 • KEMP, TX 75143
p: 1-800-369-6671 • intl: 903-498-3363 • f: 903-498-3364 • sales@larsonelectronics.com

Certification

Manufacturer: Larson Electronics LLC
Address: 9419 US-HWY 175
Kemp, Texas 75143

Declare the following equipment conforms to the standard(s) as listed:

Model: LEDLB, LED3W, LED5W, LED10W, LEDP, and LEDxxWRE Series
Description: LED Light Bars

Evaluated Listings:

CE: Regulation (EC) No 1907/2006 - REACH REGULATION

This letter establishes the opinion of Larson Electronics LLC regarding the status, under the current European Union ("EU") Regulations on Registration, Evaluation, Authorization, and Restriction of Chemical Substances ("REACH").

REACH does not apply to manufactured products which are referred to as "completed articles". Substances (chemicals) are subject to REACH registration, NOT products.

In addition, Articles are exempt from the REACH requirements if (a) the Article does not contain a substance of very high concern or candidate substance in an amount exceeding 0.1% weight by weight, and (b) if substances present in the Article in excess of 1 ton per year per importer are not expected nor intended to be released.

Based on communication with our raw material suppliers, we conclude that to the best of our knowledge our products requiring REACH compliance do not contain any of the currently listed SVHC in concentrations of 0.1% or above.

Accordingly, we foresee no registration or pre-registration requirement for the products we supply.

Signed for and on behalf of: Larson Electronics, LLC
Place of issue: Kemp, TX

Signature: James Thomas

Name: James Thomas
Position: Operations Manager

LARSON ELECTRONICS LLC • 9419 E US HWY 175 • KEMP, TX 75143
p: 1-800-369-6671 • intl: 903-498-3363 • f: 903-498-3364 • sales@larsonelectronics.com

Frequently Asked Questions (FAQ)