Larson Electronics LLC
9419 E US HWY 175, Kemp, TX 75143
Phone: 800.369.6671

www.LarsonElectronics.com
Email: sales@LarsonElectronics.com
Fax: 903.498.3364

HL-85-10W1-D

Handheld LED Spotlight with Inline Dimmer -800 Lumens - 800 Foot Beam - 9-32 Volts DC - Coil Cord

Product ID: 46791



Larson Electronics LLC manufactures a wide variety of products, including custom built to spec designs. The pictures displayed for this unit are a general representation of form factor for the product line and may not accurately represent this exact configuration in every detail due to custom builds and changes between similar products in our standard catalog. The specifics for this configuration are listed in the specification table and supporting documentation (CAD files, Dimensional Drawing, Name Plate Diagram, Wiring Diagram, etc.). This means that specific details (receptacles, plugs, wires, connections, mounting brackets, external finishes, etc.) may not be accurately represented in images vs specifications. Please review specifications and do not order based solely on images.

HL-85-10W1-D Spotlight
Lamp Type: LED
Dimensions: 4.5"-L 1.5"-Depth 5/8" W
Weight: 10.Oz
Watts: 10 watts
Voltage: 9 to 32 Volts DC
Lumens: 800
Lamp Life Expectancy: 120,000 Hours
Beam Lux: At 10 Ft: 1,050 At 15 Ft: 390
Amps: 1 on 12 VDC, .5 on 24VDC
Light Color: 6000K
Beam Type: Spot
Mounting: Handheld
Dimming: PWM Controller - 0 to 100%
Need more power? Take a look at our High Intensity Discharge (HID) Spotlight with 3200 lumens and 15 million Candlepower

Features
High Output 10 Watt LED
Lightwieght Pistol Grip Design
No Tools Field Serviceable
120,000 Hour LED Lamp Life
Heavy Duty Nylon and Aluminum Construction
PWM Dimming Controller - 0 to 100%

Special Orders - Special Requirements
Contact us for special requirements
Toll Free: 1-800-369-6671
Intl: 1-903-270-1187
Fax: 1-903-498-3364
E-mail: sales@larsonelectronics.com

Buy American Compliant

The Larson Electronics HL-85-10W1-D LED Pistol Grip Spotlight is an extremely rugged and effective spotlight designed to give users a powerful, durable and easy to use source of reliable light. This spotlight produces 800 lumens and a light beam approximately 800' long by 175' wide. This spotlight is built for power, durability and versatility with a detachable 16 foot coil cord with cigarette plug, inline dimmer switch, and a patented 10 Watt LED reflector assembly packaged in a machined aluminum head .

This light weight, 10 watt LED spotlight is ergonomically designed to produce a

well balanced and easily managed handheld light source that can withstand abuse under tactical conditions with a handle constructed of high impact nylon and an LED fully potted within a lamp assembly constructed of machined aluminum. This lamp and the materials it is constructed from are water, UV ray, impact and vibration resistant and designed to be easily field serviceable. This unit requires no tools to remove any components and the internal connectors are accessed through a snap in base at the bottom of the handle. This spotlight will work with 12 or 24 volt DC, and power is provided through a 16 foot coil cord and cigarette plug connector.
The HL-85-10W-1-D is equipped with an inline dimmer switch (PWM) that controls the brightness of the light emitted by the LED head. This switch operates with pulse width modulation technology for precise control and reliable operation and allows the operator adjust the brightness simply by turning a dial.



Click Photo to Enlarge



Click Photo to Enlarge



Click Photo to Enlarge



A room lit by ambient light

Click Photo to Enlarge

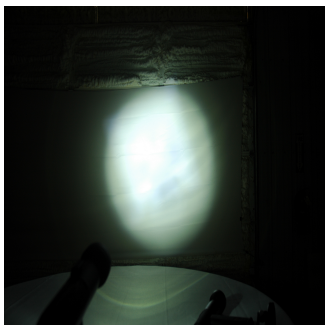

The same room lit by the HL-85-10W1-D

Click Photo to Enlarge

Durability-Convenience: The HL-85-10W1-D Pistol Grip LED Spotlight has a booted push button switch, sealed cord connectors, IP67 (watertight) rated LED light head and contains a single LED that is fully potted within a machined aluminum lamp housing protected by a thick Lexan lens. This LED has an expected life span of 120,000+ hours and the entire LED lamp housing can be removed and replaced. This light is constructed of UV, water and impact resistant materials including a handle constructed of high impact nylon for extreme durability and resistance to damage from vibrations, shocks and impacts. The machined aluminum lamp housing is finished with an anodized coating for corrosion resistance. 16 gauge wiring is used to connect the internal components for maximum reliability and durability.
Each HL-85-10W1-D comes with a detachable 16 foot coil cord with cigarette plug. The cord is detached via a weatherproof, 2 pin Deutsch connector which easily and securely attaches and detaches the coil cord from the spotlight. Other cords, including 21 foot cords with ring terminals (C-21RT), 16 foot cord with spring battery clamps (alligator clips) (C-16BC) and a 16 foot straight cord with cigarette plug (C-16CP) are available. Also included is a lanyard attachment for securing the light to wrists to prevent dropping if the user loses their grip. This light operates on any voltage from 9 to 32 VDC, making it ideal for connecting to vehicles and equipment as well as hunting, boating, security and any application where typical 12 or 24 VDC electrical power is available.
Versatility: The entire unit weighs only 14 ounces and comes with an included

wrist lanyard for added carrying security. We also offer an optional MM-2 magentic base and permanent mount bases, which can be screwed into the 3/8-16 inch brass nut fastener eimbedded in the base of the handle . This unit is fully field serviceable and requires no tools to disassemble or reassemble. This unit can be run from any 12 volt vehicle, ATV or boat battery and is ideal for military, security and law enforcement use as well as hunting and any application that requires an extremely durable and effective source of portable illumination.
Inline Dimmer: We have fitted this unit with an encapsulated, inline pulse width modulation controller to allow operators to dim the LED output to any desired level from 0 percent to 100 percent light output. This feature is ideal for hunters and other operators who don`t need maximum output at all times and wish to subdue the light for more covert applications.

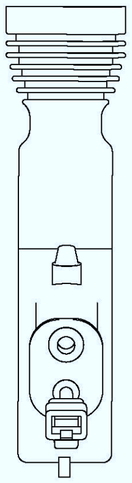



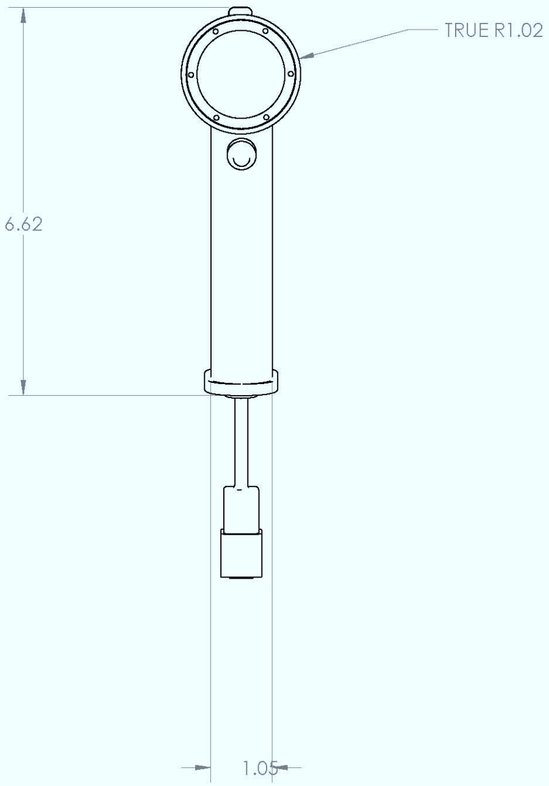

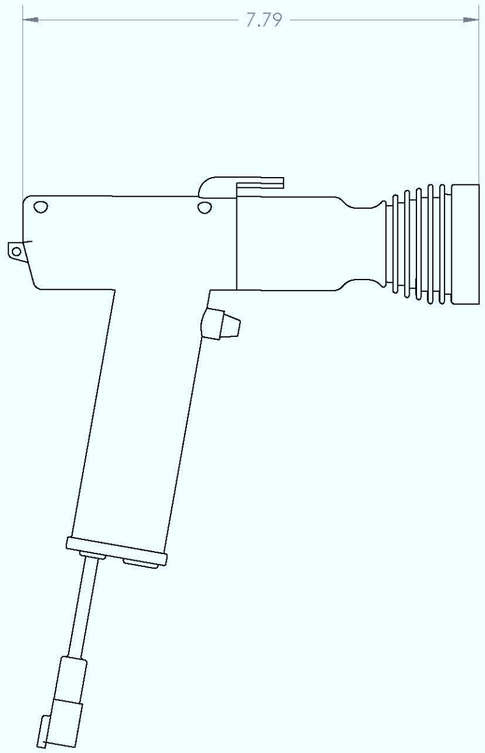

PROPRIETARY AND CONFIDENTIAL

THE INFORMATION CONTAINED IN THIS DRAWING IS THE SOLE PROPERTY OF Magnalight.com. ANY REPRODUCTION IN PART OR AS A WHOLE WITHOUT THE WRITTEN PERMISSION OF Magnalight.com IS PROHIBITED.

		UNLESS OTHERWISE SPECIFIED:		NAME	DATE
		DIMENSIONS ARE IN INCHES TOLERANCES: FRACTIONAL ± ANGULAR: MACH ± BEND ± TWO PLACE DECIMAL ± THREE PLACE DECIMAL ±	DRAWN		6/09
			CHECKED		
			ENG APPR.		
			MFG APPR.		
		INTERPRET GEOMETRIC TOLERANCING PER:	Q.A.		
		MATERIAL	COMMENTS:		
NEXT ASSY	USED ON	FINISH			
APPLICATION		DO NOT SCALE DRAWING			

Magnalight.com

TITLE:

HL-85-10W1

SIZE	PART NO.	REV
		B

SCALE: 1:2	WEIGHT:	SHEET 1 OF 1

Frequently Asked Questions (FAQ)