Larson Electronics LLC
9419 E US HWY 175, Kemp, TX 75143
Phone: 800.369.6671

www.LarsonElectronics.com
Email: sales@LarsonElectronics.com
Fax: 903.765.7664

EPSL-80-141-VAC

Explosion Proof LED Strobe Light - 120-240 Volts AC - 141 Candela - Class 1 Div. 1

Product ID: 46735



Image: EPSL-80-141-VAC

Larson Electronics LLC manufactures a wide variety of products, including custom built to spec designs. The pictures displayed for this unit are a general representation of form factor for the product line and may not accurately represent this exact configuration in every detail due to custom builds and changes between similar products in our standard catalog. The specifics for this configuration are listed in the specification table and supporting documentation (CAD files, Dimensional Drawing, Name Plate Diagram, Wiring Diagram, etc.). This means that specific details (receptacles, plugs, wires, connections, mounting brackets, external finishes, etc.) may not be accurately represented in images vs specifications. Please review specifications and do not order based solely on images.

EPSL-80-141-VAC Explosion Proof LED Strobe Beacon
Lamp Type: LED
Lamp Dimensions: 7.44"-Diameter, 11.1" Height
Lamp Weight: 12 lbs
Hub: 3/4" Threaded
Candela: 141
Voltage: 120 - 240 Volts AC 50/60hz
Lighting Configuration: Strobing Beacon
Mounting: 3/4" Hub- Ceiling, Wall* or Pendant Mount
U.L. Listing: Classified by the National Electric Code
Total Lumens: N/A
Wiring: 3/4 inch Hub
Temp Rating: T6 - All Voltage and Temperature Ranges
In-rush Current: 065 mA @ 120 VAC - 125 mA @ 240 VAC
Amp Draw: 035 mA @ 120 VAC Flashing; 100 mA Steady,020 mA @ 240 VAC Flashing; 050 mA Steady
*5 year warranty replacement on this LED light.

U.L Ratings
Class 1 Div 1 -Groups C, D
Class 1 Div 2 -Groups A, B, C, D
Class 2, Division 2, Groups F, G
NEMA 4X
Suitable for Marine Environments
T6 Temperature Rating
-55 C to 85 C Operating Temp

Special Orders - Special Requirements
Contact us for special requirements
Toll Free: 1-800-369-6671
Fax: 1-903-765-7664
E-mail: sales@larsonelectronics.com

Made in Texas

The EPSL-80-141-VAC LED hazardous area strobe beacon from Larson Electronics operates on 120-240 VAC and provides operators with a very long lived and powerful alternative to traditional HID and incandescent strobe lights. Weather proof and Nema 4X compliant for marine use, this LED strobe light is available in pendant, ceiling or wall mount versions with

several color options available as well.

The powerful and durable EPSL-80-141-VAC strobing beacon from Larson Electronics is approved for use in marine locations and is ideal for industrial applications, confined spaces, hazardous work areas and Class 1 DIV 1 & 2 areas where a powerful and durable strobe light solution is needed. The lamp housing is weatherproof and constructed of copper-free aluminum alloy featuring a baked on powder coat finish, o-ring sealed glass dome with double pitch acme threads, and stainless steel hardware for corrosion resistance. This unit is available in pendant, ceiling and wall mount versions as well as red, blue, green, amber, and white LED colors.

Available in the following mounting options



Ceiling Mount



Pendant Mount



Wall Mount

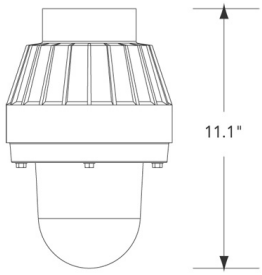

Click Photo to Enlarge

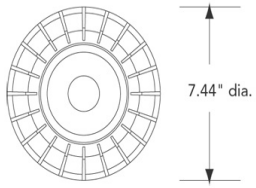

Click Photo to Enlarge

This hazardous area light is UL Listed Class 1 Division 1, Groups C and D, Class 1 Division 2 Groups A, B, C, D, and Class 2, Division 2, Groups F and G. These lights are also compliant with NEMA 4X standards and marine-rated for use in salt water environments. The high power LED cluster is protected by an internal cooling fin array that reduces heat build for longer LED life and higher light output consistency. An internal DIP switch allows operators to choose from steady on, single flash or double flash modes and the choice of ceiling, pendant or wall mounting options provide versatility when choosing mounting locations. These LED strobe beacons have 3/4" hubs and can be operated with voltages of 120 to 240 VAC 50/60hz without modification.

This strobe light has a T6 termperature rating and and an operating temp range of -55 C to 85 C. The LED output of these beacons is rated at 141 Candela and provides highly effective strobe visibility in combustible atmospheres. In single flash mode this LED beacon produces 80 single flashes per minute and in double flash mode produces 40 double flashes per minute. This Strobing LED beacon is warrented for 5 years against manufacturing defects.

Suggested applications: ship yards, boat yards, plants, manufacturing, vessels, petrochemical plants, barges and oil rig and oil field applications.

Larson Electronics LLC
9419 E US HWY 175, Kemp, TX 75143
Phone: 800.369.6671

www.LarsonElectronics.com
Email: sales@LarsonElectronics.com
Fax: 903.765.7664

Made in the USA Quality

1. High Power LED Strobe.
2. Heat Baked Powder Coat Finish.
3. Rugged Non Sparking Aluminum Lamp Housing.
4. Shock Resistant Glass.
5. Sealed Glass Enclosure.
6. Efficient Heat Dissipation..
7. Low Maintenance.
8. Corrosion Resistant Nema 4X Marine Compliant.
9. Stainless Hardware.
10. Double Pitch Acme Threads.

LED Benefits

1. Long lamp life.
2. High efficiency and low amp draw.
3. High durability and reliability.
4. High output and very good color rendering.
5. Vibration and shock resistant.
6. Low maintenance.
7. Low temperature.
8. Less frequent outages, higher output improves workplace safety.

REV	DESCRIPTION	DATE
A	PRODUCTION RELEASE	01/20/2023

EPSL-80-141-VAC-CLG-AMB-DF

LARSON ELECTRONICS®

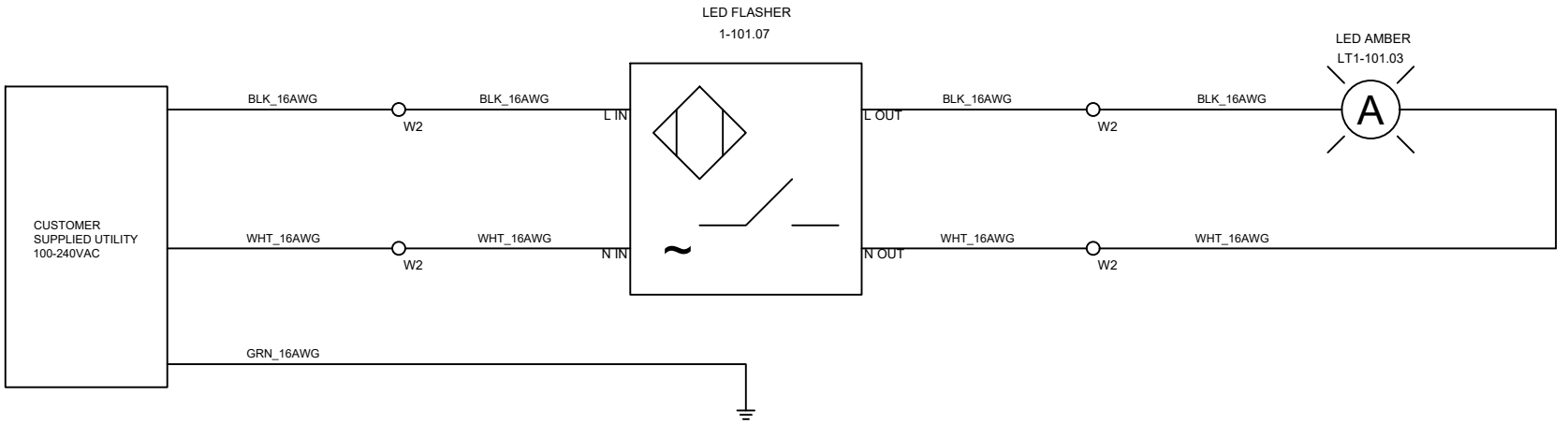

TAGS	QTY	CATALOG	DESCRIPTION
1-101.07	1		100-240VAC LED FLASHER MODULE
LT1-101.03	1	UNV00008056	AMBER A19 STROBE 120/277VAC
W2	4	UNV00009802	2 HOLES WAGO

LARSON ELECTRONICS
9419 E US HWY 175,
KEMP, TX 75143

TITLE			
EPSL-80-141-VAC-CLG-AMB-DF			
DRAWN BY	DATE	REV	
K.NGUYEN	01/20/2023	A	
CHECKED BY	SHEET #	DRAWING #	
J.Maldonado	1 OF 1	101	

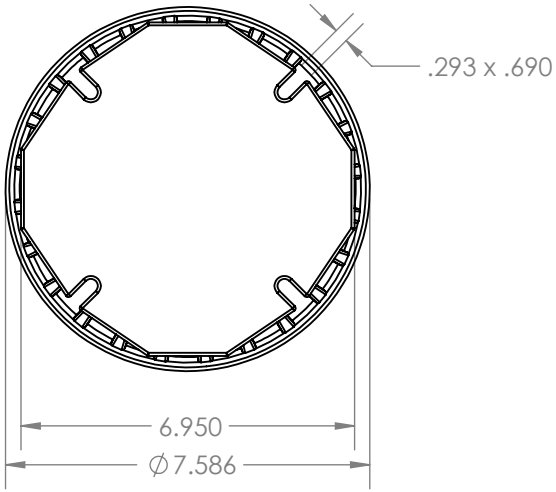

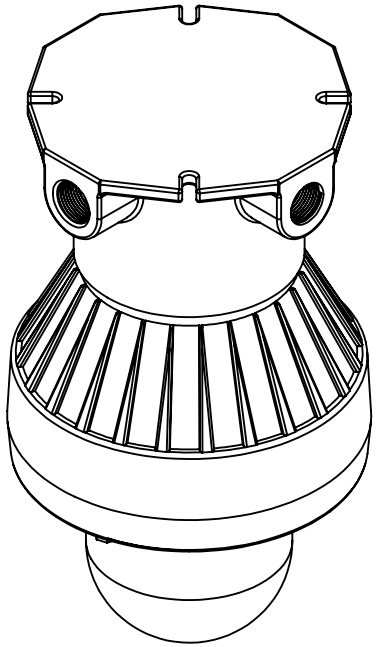

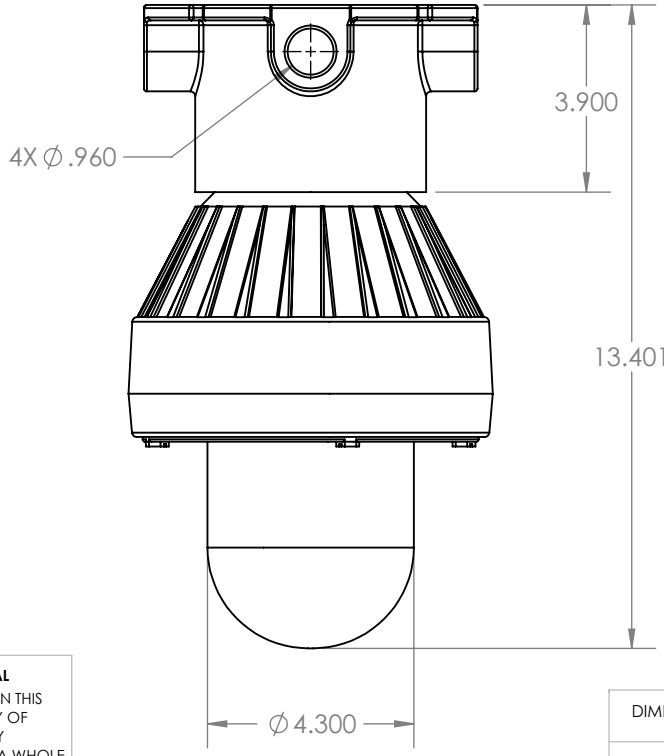

Larson Electronics

TITLE:

EPSL-80-141-VAC-CLG

PROPRIETARY AND CONFIDENTIAL
THE INFORMATION CONTAINED IN THIS DRAWING IS THE SOLE PROPERTY OF LARSON ELECTRONICS LLC. ANY REPRODUCTION IN PART OR AS A WHOLE WITHOUT THE WRITTEN PERMISSION OF LARSON ELECTRONICS LLC IS PROHIBITED.

		NAME
DIMENSIONS ARE IN INCHES	DRAWN	CHRIS THAUER
MATERIAL	CHECKED	JEREMY BLANKENSHIP
DO NOT SCALE DRAWING		

SIZE	DWG. NO.	REV
A		

SCALE: 1:4 | SHEET 1 OF 2

5 4 3 2 1

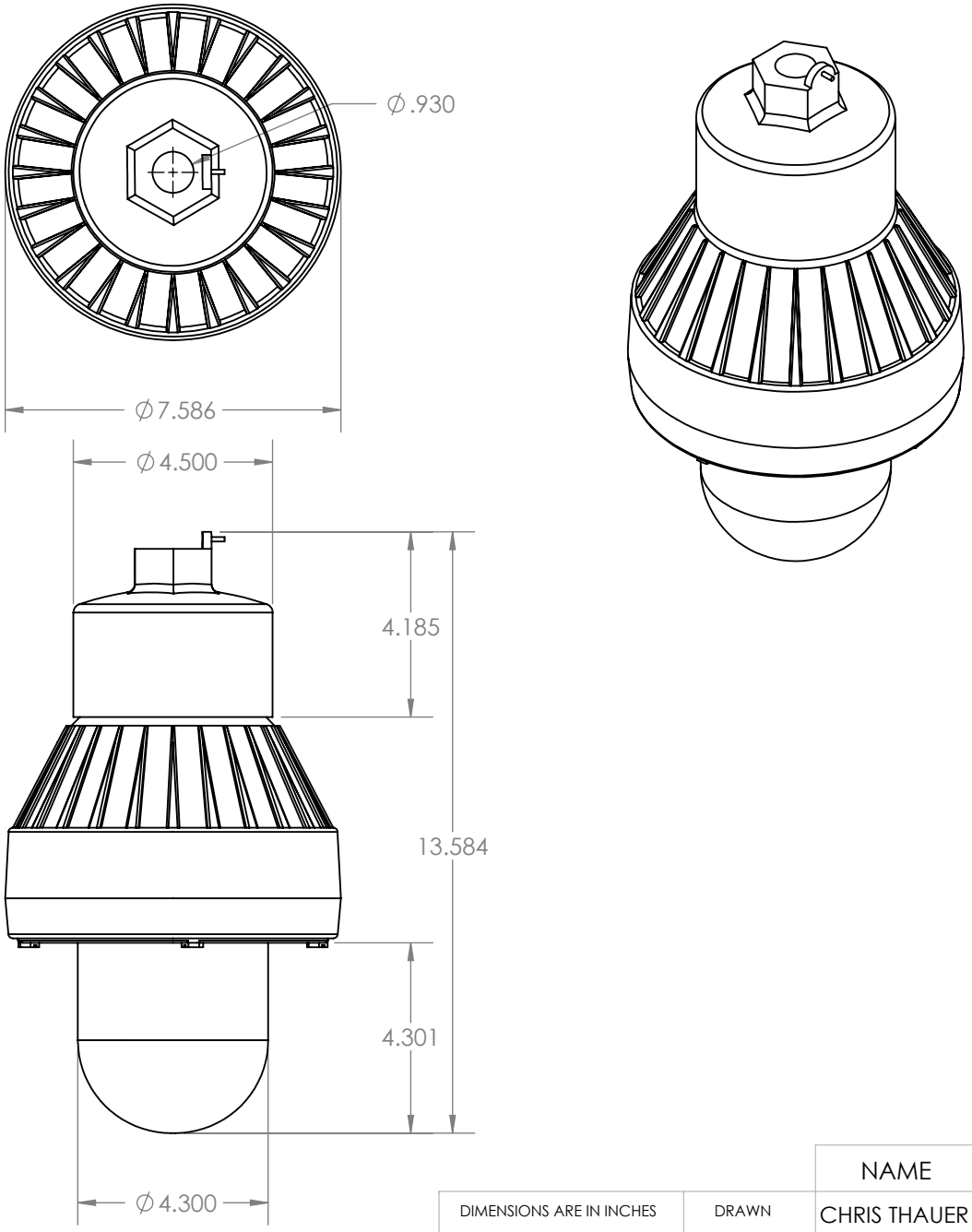

Larson Electronics

TITLE:

EPSL-80-141-VAC-PND

PROPRIETARY AND CONFIDENTIAL
THE INFORMATION CONTAINED IN THIS DRAWING IS THE SOLE PROPERTY OF LARSON ELECTRONICS LLC. ANY REPRODUCTION IN PART OR AS A WHOLE WITHOUT THE WRITTEN PERMISSION OF LARSON ELECTRONICS LLC IS PROHIBITED.

		NAME
DIMENSIONS ARE IN INCHES	DRAWN	CHRIS THAUER
MATERIAL	CHECKED	JEREMY BLANKENSHIP
DO NOT SCALE DRAWING		

SIZE	DWG. NO.	REV
A		
SCALE: 1:4		SHEET 2 OF 2

5 4 3 2 1

Larson Electronics LLC
9419 E US HWY 175, Kemp, TX 75143
Phone: 800.369.6671

www.LarsonElectronics.com
Email: sales@LarsonElectronics.com
Fax: 903.765.7664



Larson Electronics LLC
9419 E US HWY 175, Kemp, TX 75143
Phone: 800.369.6671

www.LarsonElectronics.com
Email: sales@LarsonElectronics.com
Fax: 903.765.7664



Larson Electronics LLC
9419 E US HWY 175, Kemp, TX 75143
Phone: 800.369.6671

www.LarsonElectronics.com
Email: sales@LarsonElectronics.com
Fax: 903.765.7664



Larson Electronics LLC
9419 E US HWY 175, Kemp, TX 75143
Phone: 800.369.6671

www.LarsonElectronics.com
Email: sales@LarsonElectronics.com
Fax: 903.765.7664



Certification

Manufacturer: Larson Electronics LLC
Address: 9419 US-HWY 175
Kemp, Texas 75143

Declare the following equipment conforms to the standard(s) as listed:

Model: EPSL-80-XX-YY
Description: Explosion Proof Jelly Jar Light

Evaluated Listings:

UL: E10514, E91793 – NEC / United States standards
UL: E10514 – CEC / Canada standards
CSA: LR11716 – CEC / Canada standards
ETL: UL 508A, UL 1203 – NEC / United States standards
ETL: CSA C22.2 No. 14, No. 25, No. 30 – CEC / Canada standards

The EPSL-80-XX-YY is certified to NEC and CEC standards for hazardous locations for:

- NEC: Class I, Divisions 1 & 2, Groups C & D; Class II, Divisions 1 & 2, Groups E, F, G
- NEC: Class I, Zones 1 & 2, Groups IIB, IIA
- CEC: Class I, Divisions 1 & 2, Groups C & D; Class II, Divisions 1 & 2, Groups E, F, G
- CEC: Class I, Zones 1 & 2, Groups IIB, IIA

The EPSL-80-XX-YY comprised of a Killark EMI series device enclosure. This device enclosure may contain an incandescent, compact fluorescent, or LED lamp and custom mounting of the lamp assembly to prevent damage. This assembly is built to NEC and CEC standards for hazardous locations and quality checked per ISO 9001:2015 standards.

Signed for and on behalf of: Larson Electronics, LLC
Place of issue: Kemp, TX

Signature: James Thomas

Name: James Thomas
Position: Operations Manager

LARSON ELECTRONICS LLC • 9419 E US HWY 175 • KEMP, TX 75143
p: 1-800-369-6671 • intl: 903-498-3363 • f: 903-498-3364 • sales@larsonelectronics.com

UL Product iQ™

IGIV.E10514 - Luminaire Fittings for Use in Hazardous Locations

Luminaire Fittings for Use in Hazardous Locations

See General Information for Luminaire Fittings for Use in Hazardous Locations

KILLARK, DIV OF HUBBELL INC (DELAWARE) E10514
2112 FENTON LOGISTICS PARK BLVD
FENTON, MO 63026 USA

Trademark and/or Tradename: "E10514" , "Killark/Chalmit"

Class I, Groups A, B, C and D; Class II, Groups E, F and G.

Flexible luminaire fittings: Series EKH, Types EKJH, EKHH, EKGH. Series EKJ, Cat. No. EKJ-1 followed by 4 to 36 incl.; Cat. No. EKJ-2 followed by 4 to 36 incl.

Class I, Groups C and D; Class II, Groups E, F and G.

Luminaire fittings: Series GEC, Cat. Nos. GECCAT, GECCT, GECCTF, GECEAT, GECET, GECLAT, GECLBT, GECLT, GECLTF, GECNT, GECTAT, GECTT, GECTTF, GECUET, GECUWT, GECXAT, GECXT, GECXTF followed by -11, -12, -21, or -22, may be followed by M; Series GEC, Cat. Nos. GECCAT, GECCT, GECCTF, GECEAT, GECET, GECLAT, GECLBT, GECLT, GECLTF, GECNT, GECTAT, GECTT, GECTTF, GECXT, GECXTF followed by -31 or -32, may be followed by M; Series GRCD, Cat. Nos. GRCDC, GRCDE, GRCDL, GRCDT, GRCDX followed by -11, -12, -21, -22, -31, or -32.

Series HXB, Cat. Nos. HXB-11, -12, -21, -22, -31, -32; Series JL, Cat. Nos. JLC, JLE, JLL, JLT,JLX-11, -12, -21, -22; Series JAL, Cat. Nos. JALC, JALE, JALL, JALT, JALX-11, -12, -21, -22, -31, -32; Cat. Nos. SPM, SPH, SPJ or SPI followed by 000001 to 999999 incl., followed by A to Z incl.

Series XFH, Cat. Nos. XFH-21, -22, -31, -32.

Flexible luminaire: Type EKJ, Cat. No. EKJ-3.

Series EZ, Cat. Nos. EZM10, EZS05, EZS07 or EZS10 followed by 0, 1, 2, 3, 4, 5, 6 or 7, followed by A2, A3, B2, B3, X2, X3, followed by G or O, followed by PS.

Class I, Group D; Class II, Groups E, F and G.

Luminaire fittings: Series JAL, Cat. Nos. JALC, JALE, JALL, JALT, JALX-4, -5 with suffixes: SU1, SU2, SU3, SU8, SUP, SU10, SU12, SU14, SU46, L, WL, P or Y.

Cat. No. EZH, EZM or EZS followed by 05, 07, 10, 15, 17, 20, 25 or 40, followed by 0, 1, 2, 3, 4, 5, 6, 7 or 8, followed by D4 or D5, followed by G or O, may be followed by Q, may be followed by BP or R.

Series EZ, Cat. No. EZM10, EZS05, -07 or -10 followed by 0, 1, 2, 3, 4, 5, 6 or 7, followed by D4 or D5, followed by G or O, followed by PS.

Class I, Groups C and D; Class II, Groups E, F and G; Class III.

EZ Series Luminaire Fittings: (+)

Ballast housing assemblies: Cat. No. EZ, followed by M, S or H, followed by 05, 07, 10, 15, 17, 20, 25 or 40, followed by 0, 1, 2, 3, 4, 5, 6, 7, 8 or 9, may be followed by Q, R, BP, PS and/or F#, followed by 1 to 7.

Ballast housing assemblies: Cat. No. EZ followed by P followed by 05, 07, 10, 12, 15, 17, 20, 25, 32, 35 or 40, followed by 0, 1, 2, 3, 4, 5, 6, 7, 8 or 9, may be followed by Q, R, BP, PS and/or F#, followed by 1 to 7 incl.

Luminaire Fitting	Cat. No.
Ballast housing assemblies	Series EZH, EZP, EZM or EZS
Optic assembly	EZGS1 or -2
Splice boxes	EZA2, -3, EZB2, -3, EZX2, -3
Optional accessories	
Angle reflector	VMPA-40
Deep dome reflector	HDR-400
Guards	EZG1, VMAG-40
Standard dome reflector	VMPSD-40

(+) Also Complementary Listed as Miscellaneous Marine Luminaires Fittings (IGZR)

Luminaire fittings: Series EMI followed by 15 or 20, may or may not be followed by ML.

Luminaire Fitting	Cat. No.
Lampholder housings	Series EMI
Optic assembly	EMGS1
Splice boxes	
Ceiling, 3/4 in. conduit	EZX2
Ceiling, 1 in. conduit	EZX3
Pendant, 3/4 in. conduit	EZA2
Pendant, 1 in. conduit	EZA3
Wall mount, 3/4 in. conduit	EZB2
Wall mount, 1 in. conduit	EZB3
Optional accessories	
Angle reflector	ERA-15
Guard	EMG1
Shallow dome reflector	ERSD-15
Angle stanchion, 1-1/4 in. conduit	EZD4
Angle stanchion, 1-1/2 in. conduit	EZD5
Optional accessories	

Angle reflector	ERA-15
Guard	EMG1
Shallow dome reflector	ERSD-15

Luminaire fittings: Series EBF followed by 13 or 26, followed by 1, 4 or 7, may or may not be followed by ML.

Luminaire Fitting	Cat. No.
Lampholder housings	Series EBF
Optic assembly	EMGS1
Splice boxes	
Ceiling, 3/4 in. conduit	EZX2
Ceiling, 1 in. conduit	EZX3
Pendant, 3/4 in. conduit	EZA2
Pendant, 1 in. conduit	EZA3
Wall mount, 3/4 in. conduit	EZB2
Wall mount, 1 in. conduit	EZB3
Optional accessories	
Angle reflector	ERA-15
Guard	EMG1
Shallow dome reflector	ERSD-15
Angle stanchion, 1-1/4 in. conduit	EZD4
Angle stanchion, 1-1/2 in. conduit	EZD5
Optional accessories	
Angle reflector	ERA-15
Guard	EMG1
Shallow dome reflector	ERSD-15

Luminaire fittings: Series EMH, EMI, EMM, EMS followed by 5, 7, 10, 15, 20, 30, 35, 75, may or may not be followed by 0, 1, 2, 3, 4, 5 or 7, may or may not be followed by ML.

Luminaire Fitting	Cat. No.
Luminaire housings	Series EMH, EMI, EMM, EMS
Optic assembly	EMGS3

Splice boxes	
Ceiling, 3/4 in. conduit	EZX2
Ceiling, 1 in. conduit	EZX3
Pendant, 3/4 in. conduit	EZA2
Pendant, 1 in. conduit	EZA3
Wall mount, 3/4 in. conduit	EZB2
Wall mount, 1 in. conduit	EZB3
Optional accessories	
Angle reflector	ERA30
Guard	EMG2
Shallow dome reflector	ERSD30

Luminaire Fitting	Cat. No.
Luminaire housings	Series EMH, EMI, EMM, EMS
Optic assembly	EMGS3
Splice boxes	
Angle stanchion, 1-1/4 in. conduit	EZD4
Angle stanchion, 1-1/2 in. conduit	EZD5
Optional accessories	
Angle reflector	ERA30
Guard	EMG2
Shallow dome reflector	ERSD30

Luminaire fittings: Series EQF followed by 26, 32, 42, 52, 64 or 84 , followed by 30, may be followed by N4, D or A.

Luminaire Fitting	Cat. No.
Lampholder housings	Series EQF
Optic assembly	EMGS1, EMGS3
Splice boxes	
Ceiling, 3/4 in. conduit	EZX2
Ceiling, 1 in. conduit	EZX3

Pendant, 3/4 in. conduit	EZA2
Pendant, 1 in. conduit	EZA3
Wall mount, 3/4 in. conduit	EZB2
Wall mount, 1 in. conduit	EZB3
Optional accessories	
Angle reflector	ERA-15, ERA30
Guard	EMG1
Shallow dome reflector	ERSD-15, ERSD30
Angle stanchion, 1-1/4 in. conduit	EZD4
Angle stanchion, 1-1/2 in. conduit	EZD5
Optional accessories	
Angle reflector	ERA-15
Guard	EMG1, EMG2
Shallow dome reflector	ERSD-15

Class I, Groups C and D.

EZ Series Luminaire Fittings: (+)

Ballast housing assemblies: Cat. No. EZ followed by M, S, or H, followed by 05, 07, 10, 15, 17, 20, 25 or 40, followed by 0 to 9, may be followed by T, R, BP and/or PS.

Ballast housing assemblies: Cat. No. EZ followed by P followed by 05, 07, 10, 12, 15, 17, 20, 25, 32, 35 or 40, followed by 0 to 9, may be followed by T, R, BP and/or PS.

Splice boxes: Cat. Nos. EZD4 or EZD5.

(+) Also Complementary Listed as Miscillaneous Marine Luminaires Fittings (IGZR)

Class I, Division 2, Groups A, B, C and D; Class II, Groups E, F and G.

Ballast tank assemblies: Series VM (E, F, P or V)-0-0-(2, 3, 7, 8, 9, 32 or 35)-(0, 1, 2, 3, 4, 5, 7 or 8)-00, may be followed by NR for use with the following fittings:

Optics: VMER40,VMG-40, VZRG-4050.

Guard: VMAG-40.

Mounting splice boxes: VMA-2, -3, -24, -34, VMB-2, -3, VMC-2, -3, VMX-2, -3.

Reflectors: HRA-500, HRD-400, HRS-500, HRSD-500, VMPA-40, VMPSD-40.

Ballast tank assemblies: Series VMKO, VMLO, VMMO followed by -0, followed by 1, 4, 5, 6, 7 or 9, followed by 00, 10, 20, 30, 40, 50, 60, 70*or 80, may be followed by 1, may be followed by IR, NR, QTZ (Class II) and/or BP and/or KIT followed by 134, 135, 136, 137, 138, 139, 140, 141, 142, 143 or 144 for the use with the following fittings. (Not all combinations are covered for Class II).

Optics - VMG-17, VZRG-1550, VZRG-2550.

Gruards - VMAG-17, VMRWG-8, VMRWG.

Mounting splice boxes - VMA-2, -3, -24 and -34, VMX-2 and -3, VMB-2 and-3, VMC-2 and -3, VMD-4 and -5 (Class I, Div. 2 only with no reflectors), VMDS-5.

Reflectors - VMPA-17 and VMPSD-17.

Ballast tank assembly: Series VBF followed by 13, 26 or 39, followed by 1 or 4. May be followed by F or N4.

Ballast tank assembly: Series VQF followed by 26, 32, 39, 42, 52, 64 or 84, followed by 30. May be followed by F or N4.

Mounting splice boxes: VMA-2, -3, -24 and -34, VMX-2 and -3, VMB-2 and -3, VMC-2 and -3, VMD-4 and -5 (Class I, Div.2 only with no reflectors), VMDS-5.

Optics - Globe: VMG-17.

Guard: VMAG-17.

Reflectors: VMPA-17 and VMPSD-17.

Ballast tank assembly: Series MB for use with the following fittings

Mounting splice boxes: Cat. Nos. MBA-2, -3, MBB-2, -3, MBD-4, -5, MBX-2, -3.

Optics: MBG, VZRG-1550.

Guard: MBAG, VMRGW-8.

Reflectors: VMPA-17, VMPSD-17.

Class I, Groups A, B, C and D, Division 2.

	Cat. No.
Luminaire LED Modules	VTL-1
	VTL-2
Luminaire bodies	VXFC-100-N34
	VXFC-200-N34
Splice boxes	VB-1 or -2
	VBC-1 or -2
	VD-4
	VGA-1 or -2
	VGC-1 or -2
	VGH-1 or -2
	VGX-1 or -2
	VXA-1 or -2
Globes	VAMG-100, -200
	VBG-100 or -200
	VCG-100 or -200
	VCGP-100 or -200
	VGG-100 or -200

	VRG-100 or -200
	VRSG-100
Optional accessories	
Guard	VAG-100 or -200
Reflector	VPRSD-100 or -200
Bracket Mounting Adapter	VFL

Cat. No. VM5S; followed by 60; followed by 0, 1, 2, 3, 4, 5, 6, 7, 8, 9, 10 or 15. May be followed by BP, P# (# = 1, 2 or 3), TB, Q# (# = 1 thru 8) or F# (1 thru 8).

Cat. No. VM5H; followed by 25, 40; followed by 0, 1, 2, 3, 4, 5, 6, 7, 8, 9, 10 or 15. May be followed by BP, P# (# = 1, 2 or 3), TB, Q# (# = 1 thru 8) or F# (# = 1 thru 8).

Cat. Nos. VM5P or VM5E; followed by 17, 25, 32, 35, 40; followed by 0, 1, 2, 3, 4, 5, 6, 7, 8, 9, 10 or 15. May be followed by BP, P# (# = 1, 2 or 3), TB, Q# (# = 1 thru 8) or F# (# = 1 thru 8).

Cat. No. VM5M; followed by 40; followed by 0, 1, 2, 3, 4, 5, 6, 7, 8, 9, 10 or 15. May be followed by BP, P# (# = 1, 2 or 3), TB, Q# (# = 1 thru 8) or F# (# = 1 thru 8).

The VM5 series ballast tank assemblies are intended for use with the following Listed Luminaire Fittings for hazardous locations. Not all combinations are covered.

Optics , Cat. Nos: VMG40, VZRG4050, VZRG4020, VMER40.

External guards , Cat. Nos: VMAG40S, VMRWG, VMERG.

External reflectors, Cat. Nos: VMPSD40, VMPA40, HRD400, HRD400ALZ.

Mounting splice boxes, Cat. Nos: VMA2B, VMA3B, VMF2B, VMF3B, VMX2B, VMX3B, VMX6B, VMX7B, VMX8B, VMX9B, VMB2B, VMB3B, VMC2B, VMC3B, VMD4B, VMD5B, VMS4B, VMS5B, VMB10B, VMB8B, VMB810B.

VM series Luminaire fittings for use in hazardous locations, Class I, Divisions 2, Groups A, B, C and D; Class II, Groups E, F, and G; Class III.

Luminaire fittings:

Optics: VMG17, VMG-17, VMR175, VMR171, VMG25, VMR255, VMR251, VMR253, VZRG1550, VZRG2520, VZRG2550, VMER40, VMEP40.

Guards: VMAG17, VMAG25S, VMRWG, VMRWGS, VMRWG8, VMERG.

Reflectors: VMPSD40, VMPA40.

Mounting Splice Boxes: VMA2B, VMA3B, VMF2B, VMF3B, VMX2B, VMX3B, VMX6B, VMX7B, VMX8B, VMX9B, VMB2B, VMB3B, VMC2B, VMC3B, VMD4B, VMD5B, VMS4B, VMS5B.

Ballast Tank Assemblies: VM1H, VM1P, VM1S, VM2H, VM2P or VM2S followed by 03, 05, 07, 10, 12, 15 or 17, followed by 0, 1, 2, 3, 4, 5, 6, 7, 8, 9, 10 or 15, may be followed by IR, NR, BP, P# (1, 2 or 3), TBX (X = 1 thru 9), Q# (1 thru 8) or F# (1 thru 8).

Series VM3S followed by 05, 07, 10 or 15, followed by 0, 1, 2, 3, 4, 5, 6, 7, 8, 9, 10 or 15. May be followed by IR, NR, BP, P # (1, 2 or 3), TB, Q# (1 thru 8), QA or F# (1 thru 8).

Series VM3H followed by 07, 10, 15, 17, or 25, followed by 0, 1, 2, 3, 4, 5, 6, 7, 8, 9, 10 or 15. May be followed by IR, NR, BP, P # (1, 2 or 3), TB, Q# (1 thru 8), QA or F# (1 thru 8).

Series VM3P followed by 12, 15, 17 or 20, followed by 0, 1, 2, 3, 4, 5, 6, 7, 8, 9, 10 or 15. May be followed by IR, NR, BP, P # (1, 2 or 3), TB, Q# (1 thru 8), QA or F# (1 thru 8).

Series VM3M followed by 10, 17, or 25, followed by 0, 1, 2, 3, 4, 5, 6, 7, 8, 9, 10 or 15. May be followed by IR, NR, BP, P # (1, 2 or 3), TB, Q# (1 thru 8), QA or F# (1 thru 8).

Series VM4S followed by 05, 07, 10, or 15, followed by 0, 1, 2, 3, 4, 5, 6, 7, 8, 9, 10 or 15. May be followed by IR, NR, BP, P # (1, 2 or 3), TB, Q# (1 thru 8), QA or F# (1 thru 8).

Series VM4H followed by 07, 10, 15, 17 or 25, followed by 0, 1, 2, 3, 4, 5, 6, 7, 8, 9, 10 or 15. May be followed by IR, NR, BP, P # (1, 2 or 3), TB, Q# (1 thru 8), QA or F# (1 thru 8).

Series VM4P followed by 12, 15, 17, or 20, followed by 0, 1, 2, 3, 4, 5, 6, 7, 8, 9, 10 or 15. May be followed by IR, NR, BP, P # (1, 2 or 3), TB, Q# (1 thru 8), QA or F# (1 thru 8).

Series VM4M followed by 10, 17, or 25, followed by 0, 1, 2, 3, 4, 5, 6, 7, 8, 9, 10 or 15. May be followed by IR, NR, BP, P # (1, 2 or 3), TB, Q# (1 thru 8), QA or F# (1 thru 8).

Ballast Tank Assemblies: Cat. No. VM5S; followed by 25, or 40; followed by 0, 1, 2, 3, 4, 5, 6, 7, 8, 9, 10 or 15. May be followed by NR, BP, TB, Q# (# = 1 thru 8) or F# (1 thru 8).

Cat. No. VM5H; followed by 25, 40; followed by 0, 1, 2, 3, 4, 5, 6, 7, 8, 9, 10 or 15. May be followed by NR, BP, TB, Q# (# = 1 thru 8) or F# (# = 1 thru 8).

Cat. Nos. VM5P or VM5E; followed by 17, 25, 32, 35, 40; followed by 0, 1, 2, 3, 4, 5, 6, 7, 8, 9, 10 or 15. May be followed by NR, BP, TB, Q# (# = 1 thru 8) or F# (# = 1 thru 8).

Cat. No. VM5M; followed by 40; followed by 0, 1, 2, 3, 4, 5, 6, 7, 8, 9, 10 or 15. May be followed by NR, BP, TB, Q# (# = 1 thru 8) or F# (# = 1 thru 8) + Note:

The VM5 series ballast tank assemblies are intended for use with the following Listed Luminaire Fittings for hazardous locations. Not all combinations are covered.

Optics , Cat. Nos: VMG40, VZRG4050, VZRG4020, VMER40.

External guards , Cat. Nos: VMAG40S, VMRWG, VMERG.

External reflectors , Cat. Nos: VMPSD40, VMPA40, HRD400, HRD400ALZ.

Mounting splice boxes, Cat. Nos: VMA2B, VMA3B, VMF2B, VMF3B, VMX2B, VMX3B, VMX6B, VMX7B, VMX8B, VMX9B, VMB2B, VMB3B, VMC2B, VMC3B, VMD4B, VMD5B, VMS4B, VMS5B, VMB10B, VMB8B, VMB810B.

(Mailing address: P. O. Box 5325, St. Louis, MO 63115)

Last Updated on 2019-09-17

The appearance of a company's name or product in this database does not in itself assure that products so identified have been manufactured under UL's Follow-Up Service. Only those products bearing the UL Mark should be considered to be Certified and covered under UL's Follow-Up Service. Always look for the Mark on the product.

UL permits the reproduction of the material contained in the Online Certification Directory subject to the following conditions: 1. The Guide Information, Assemblies, Constructions, Designs, Systems, and/or Certifications (files) must be presented in their entirety and in a non-misleading manner, without any manipulation of the data (or drawings). 2. The statement "Reprinted from the Online Certifications Directory with permission from UL" must appear adjacent to the extracted material. In addition, the reprinted material must include a copyright notice in the following format: "© 2020 UL LLC"

UL Product iQ™

IGZR.E91793 - Luminaires, Miscellaneous, Marine

Note: We are enhancing our systems and you may notice missing/outdated data. During this interim period, please refer to your Certificate of Compliance or contact our Customer Service at https://www.ul.com/about/locations.

Luminaires, Miscellaneous, Marine

See General Information for Luminaires, Miscellaneous, Marine

KILLARK, DIV OF HUBBELL INC (DELAWARE) E91793
2112 FENTON LOGISTICS PARK BLVD
FENTON, MO 63026 USA

EBF fluorescent or EMI incandescent Series, Complete unit consists of an assembly of components. The complete unit Cat. No. is as follows: E, followed by MI or BF, followed by 13, 15, 20 or 26, followed by 1, 4, or 7 or a blank followed by ML.

Splice box, Cat. No. EZ followed by A2, A3, X2, X3, B2, B3, D4, D5.

External reflectors, Cat. Nos. ERSD15, ERA15.

Guard, Cat. No. EMG1.

Optic assembly, Cat. No. EMGS1.

EMI incandescent, EMS high pressure sodium, EMM mercury vapor or EMH metal halide series, Complete unit consists of an assembly of components. The complete unit Cat. No. is as follows: E, followed by MI, MS, MM or MH, followed by 35, 05, 07, 75, 10, 15 or 30, followed by 0, 1, 2, 3, 4, 5, or 7 or a blank followed by ML.

Splice box, Cat. No. EZ followed by A2, A3, X2, X3, B2, B3, D4 or D5.

External reflectors, Cat. Nos. ERSD30, ERA30.

Guard, Cat. No. EMG2.

Optic assembly, Cat. No. EMGS3.

VM series Luminaire fittings. +

Optics: VMG17, VMG-17, VMR175, VMR171, VMG25, VMR255, VMR251, VMR253, VZRG1550, VZRG2520, VZRG2550, VMER40, VMEP40.

Guards: VMAG17, VMAG25S, VMRWG, VMRWGS, VMRWG8, VMERG.

Reflectors: VMPSD40, VMPA40.

Mounting Splice Boxes: VMA2B, VMA3B, VMF2B, VMF3B, VMX2B, VMX3B, VMX6B, VMX7B, VMX8B, VMX9B, VMB2B, VMB3B, VMC2B, VMC3B, VMD4B, VMD5B, VMS4B, VMS5B.

Ballast Tank Assemblies: VM1H, VM1P, VM1S, VM2H, VM2P or VM2S followed by 03, 05, 07, 10, 12, 15 or 17, followed by 0, 1, 2, 3, 4, 5, 6, 7, 8, 9, 10 or 15, may be followed by IR, NR, BP, P# (1, 2 or 3), TBX (X = 1 thru 9) or Q# (1 thru 8).

Series VM3S followed by 05, 07, 10 or 15, followed by 0, 1, 2, 3, 4, 5, 6, 7, 8, 9, 10 or 15. May be followed by IR, NR, BP, P # (1, 2 or3), TB, Q# (1 thru 8), or QA.

Series VM3H followed by 07, 10, 15, 17 or 25, followed by 0, 1, 2, 3, 4, 5, 6, 7, 8, 9, 10 or 15. May be followed by IR, NR, BP, P # (1, 2 or3), TB, Q# (1 thru 8), or QA.

Series VM3P followed by 12, 15, 17 or 20, followed by 0, 1, 2, 3, 4, 5, 6, 7, 8, 9, 10 or 15. May be followed by IR, NR, BP, P # (1, 2 or 3), TB, Q# (1 thru 8), or QA.

Series VM3M followed by 10, 17 or 25, followed by 0, 1, 2, 3, 4, 5, 6, 7, 8, 9, 10 or 15. May be followed by IR, NR, BP, P # (1, 2 or 3), TB,

Q# (1 thru 8), or QA.

Series VM4S followed by 05, 07, 10 or 15, followed by 0, 1, 2, 3, 4, 5, 6, 7, 8, 9, 10 or 15. May be followed by IR, NR, BP, P # (1, 2 or 3), TB, Q# (1 thru 8), or QA.

Series VM4H followed by 07, 10, 15, 17 or 25, followed by 0, 1, 2, 3, 4, 5, 6, 7, 8, 9, 10 or 15. May be followed by IR, NR, BP, P # (1, 2 or 3), TB, Q# (1 thru 8), or QA.

Series VM4P followed by 12, 15, 17 or 20, followed by 0, 1, 2, 3, 4, 5, 6, 7, 8, 9, 10 or 15. May be followed by IR, NR, BP, P # (1, 2 or 3), TB, Q# (1 thru 8), or QA.

Series VM4M followed by 10, 17 or 25, followed by 0, 1, 2, 3, 4, 5, 6, 7, 8, 9, 10 or 15. May be followed by IR, NR, BP, P # (1, 2 or 3), TB, Q# (1 thru 8), or QA.

Ballast tank assemblies , Cat. No. VM5S followed by 25, 40 or 60, followed by 0, 1, 2, 3, 4, 5, 6, 7, 8, 9, 10 or 15. May be followed by NR, BP, TB or Q.

Cat. No. VM5H followed by 25, 40; followed by 0, 1, 2, 3, 4, 5, 6, 7, 8, 9, 10 or 15. May be followed by NR, BP, TB or Q.

Cat. No. VM5P or VM5E followed by 17, 25, 32, 35, 40; followed by 0, 1, 2, 3, 4, 5, 6, 7, 8, 9, 10 or 15. May be followed by NR, BP, TB or Q.

Cat. No. VM5M followed by 40; followed by 0, 1, 2, 3, 4, 5, 6, 7, 8, 9, 10 or 15. May be followed by NR, BP, TB or Q.

The ballast tank assemblies are intended for use with the following Listed Fixture Fittings for hazardous locations. Not all combinations are covered.

Optics , Cat. Nos: VMG40, VZRG4050, VZRG4020, VMER40.

External guards , Cat. Nos. VMAG40S, VMRWG, VMERG.

External reflectors , Cat. Nos. VMPSD40, VMPA40, HRD400, HRD400ALZ.

Mounting splice boxes , Cat. Nos. VMA2B, VMA3B, VMF2B, VMF3B, VMX2B, VMX3B, VMX6B, VMX7B, VMX8B, VMX9B, VMB2B, VMB3B, VMC2B, VMC3B, VMD4B, VMD5B, VMS4B, VMS5B.

VM (Old Style) series Luminaire fittings. +

Ballast tank assemblies , Cat. Nos. VMKO, VMLO, VMMO followed by -0, followed by 1, 4, 5, 6, 7, or 9; followed by 00, 10, 20, 30, 40, 50, 60, 70 or 80; may be followed by 1; may be followed by IR, NR, QTZ, and/or BP and/or KIT# followed by 134, 135, 136, 137, 138, 139, 140, 141, 142, 143 or 144.

Optics , Cat. Nos.VMG-17+, VZRG-1550+, VZRG-2550.

External guards , Cat. Nos. VMAG-17+, VMRWG-8+, VMRWG.

External reflectors , Cat. Nos. VMPA-17+, VMPSD-17.

Mounting splice boxes , Cat. Nos. VMA-2, -3, -24, -34, VMX-2, -3, VMB-2, -3, VMC-2, -3, VMD-4, -5, VMDS-5.

MB series Luminaire fittings +

Ballast housings , Series MB, MBF.

Optics , Cat. Nos. MBG, VZRG-1550.

External guards , Cat. Nos. MBAG, VMRWG-8.

External reflectors , Cat. Nos. VMPSD-17, VMPA-17.

Mounting splice boxes , Cat. Nos. MBA-2, MBA-3, MBX-2, MBX-3, MBB-2, MBB-3, MBD-4, MBD-5.

EZ Series Fixture Fittings: (+)

Series EZ followed by M, S, H or P; followed by 05, 07, 10, 12, 15, 17, 20, 25, 32, 35 or 40; followed by 0 to 9; may be followed by Q, PS, R, T and/or BP.

Optic assemblies , Cat. Nos. EZGS1+, EZGS2.

Reflectors , Cat. Nos. VMPSD-40+, VMPA-40+ or HRD-400.

Guards , Cat Nos. EZG1+ or VMAG-40.

+ - Complementary Listing under "Luminaires For Hazardous Locations" (IGIV).

Last Updated on 2012-10-05

The appearance of a company's name or product in this database does not in itself assure that products so identified have been manufactured under UL's Follow-Up Service. Only those products bearing the UL Mark should be considered to be Certified and covered under UL's Follow-Up Service. Always look for the Mark on the product.

UL permits the reproduction of the material contained in the Online Certification Directory subject to the following conditions: 1. The Guide Information, Assemblies, Constructions, Designs, Systems, and/or Certifications (files) must be presented in their entirety and in a non-misleading manner, without any manipulation of the data (or drawings). 2. The statement "Reprinted from the Online Certifications Directory with permission from UL" must appear adjacent to the extracted material. In addition, the reprinted material must include a copyright notice in the following format: "© 2020 UL LLC"

UL Product iQ™

IHSN.E10514 - Luminaire Fittings for Use in Zone Classified Hazardous Locations

Luminaire Fittings for Use in Zone Classified Hazardous Locations

See General Information for Luminaire Fittings for Use in Zone Classified Hazardous Locations

KILLARK, DIV OF HUBBELL INC (DELAWARE) E10514
2112 FENTON LOGISTICS PARK BLVD
FENTON, MO 63026 USA
Class I, Zone 1, AEx d IIB.

Series EZM, EZH or EZS followed by 10, 15, 17, 25, 40, 50 or 70, followed by 0, 1, 2, 3, 4, 5, 6, 7 or 8, followed by A2, A3, B2, B3, D4, D5, X2or X3, may be followed by G, PS, BP or R.

Series EMI or EBF followed by 13, 15, 20, 26 or 30, followed by A2, 3, B2, B3, D4, D5, X2 or X3, may be followed by G.

Series EMS, EMM or EMH followed by 35, 05, 07, 75, 10, 15, 13, 26, followed by, followed by 0, 1, 2, 3, 4, 5, 6, 7 or 8, followed by A2, A3, B2, B3, D4, D5, X2 or X3, may be followed by G.

Trademark and/or Tradename: "E10514", "Killark/Chalmit"

Last Updated on 2015-10-20

The appearance of a company's name or product in this database does not in itself assure that products so identified have been manufactured under UL's Follow-Up Service. Only those products bearing the UL Mark should be considered to be Certified and covered under UL's Follow-Up Service. Always look for the Mark on the product.

UL permits the reproduction of the material contained in the Online Certification Directory subject to the following conditions: 1. The Guide Information, Assemblies, Constructions, Designs, Systems, and/or Certifications (files) must be presented in their entirety and in a non-misleading manner, without any manipulation of the data (or drawings). 2. The statement "Reprinted from the Online Certifications Directory with permission from UL" must appear adjacent to the extracted material. In addition, the reprinted material must include a copyright notice in the following format: "© 2020 UL LLC"

UL Product iQ™

IGIV7.E10514 - Luminaire Fittings for Use in Hazardous Locations Certified for Canada

Luminaire Fittings for Use in Hazardous Locations Certified for Canada

See General Information for Luminaire Fittings for Use in Hazardous Locations Certified for Canada

KILLARK, DIV OF HUBBELL INC (DELAWARE) E10514
2112 FENTON LOGISTICS PARK BLVD
FENTON, MO 63026 USA
VM series Luminaire fittings for use in hazardous locations, Class I, Divisions 2, Groups A, B, C and D; Class II, Groups E, F, and G; Class III.

Fixture fittings:

Optics: VMG17, VMG-17, VMR175, VMR171, VMG25, VMR255, VMR251, VMR253, VZRG1550, VZRG2520, VZRG2550, VMER40, VMEP40.

Guards: VMAG17, VMAG25S, VMRWG, VMRWGS, VMRWG8, VMERG.

Reflectors: VMPSD40, VMPA40.

Mounting Splice Boxes: VMA2B, VMA3B, VMF2B, VMF3B, VMX2B, VMX3B, VMX6B, VMX7B, VMX8B, VMX9B, VMB2B, VMB3B, VMC2B, VMC3B, VMD4B, VMD5B, VMS4B, VMS5B, VMB10B, VMB8B, VMB810B

Ballast Tank Assemblies: VM1H, VM1P, VM1S, VM2H, VM2P or VM2S followed by 03, 05, 07, 10, 12, 15 or 17, followed by 0, 1, 2, 3, 4, 5, 6, 7, 8, 9, 10 or 15, may be followed by IR, NR, BP, P# (1, 2 or 3), TBX (X = 1 thru 9), Q# (1 thru 8) or F# (1 thru 8).

Series VM3S followed by 05, 07, 10 or 15, followed by 0, 1, 2, 3, 4, 5, 6, 7, 8, 9, 10 or 15. May be followed by IR, NR, BP, P # (1, 2 or 3), TB, Q# (1 thru 8), QA or F# (1 thru 8).

Series VM3H followed by 07, 10, 15, 17 or 25, followed by 0, 1, 2, 3, 4, 5, 6, 7, 8, 9, 10 or 15. May be followed by IR, NR, BP, P # (1, 2 or 3), TB, Q# (1 thru 8), QA or F# (1 thru 8).

Series VM3P followed by 12, 15, 17 or 20, followed by 0, 1, 2, 3, 4, 5, 6, 7, 8, 9, 10 or 15. May be followed by IR, NR, BP, P # (1, 2 or 3), TB, Q# (1 thru 8), QA or F# (1 thru 8).

Series VM3M followed by 10, 17 or 25, followed by 0, 1, 2, 3, 4, 5, 6, 7, 8, 9, 10 or 15. May be followed by IR, NR, BP, P # (1, 2 or 3), TB, Q# (1 thru 8), QA or F# (1 thru 8).

Series VM4S followed by 05, 07, 10 or 15, followed by 0, 1, 2, 3, 4, 5, 6, 7, 8, 9, 10 or 15. May be followed by IR, NR, BP, P # (1, 2 or 3), TB, Q# (1 thru 8), QA or F# (1 thru 8).

Series VM4H followed by 07, 10, 15, 17 or 25, followed by 0, 1, 2, 3, 4, 5, 6, 7, 8, 9, 10 or 15. May be followed by IR, NR, BP, P # (1, 2 or 3), TB, Q# (1 thru 8), QA or F# (1 thru 8).

Series VM4P followed by 12, 15, 17 or 20, followed by 0, 1, 2, 3, 4, 5, 6, 7, 8, 9, 10 or 15. May be followed by IR, NR, BP, P # (1, 2 or 3), TB, Q# (1 thru 8), QA or F# (1 thru 8).

Series VM4M followed by 10, 17 or 25, followed by 0, 1, 2, 3, 4, 5, 6, 7, 8, 9, 10 or 15. May be followed by IR, NR, BP, P # (1, 2 or 3), TB, Q# (1 thru 8), QA or F# (1 thru 8).

Ballast Tank Assemblies: Cat. No. VM5S; followed by 25, or 40; followed by 0, 1, 2, 3, 4, 5, 6, 7, 8, 9, 10 or 15. May be followed by BP, TB, or Q# (# = 1 thru 8).

Cat. No. VM5H; followed by 25, 40; followed by 0, 1, 2, 3, 4, 5, 6, 7, 8, 9, 10 or 15. May be followed by BP, TB, or Q# (# = 1 thru 8).

Cat. Nos. VM5P or VM5E; followed by 17, 25, 32, 35, 40; followed by 0, 1, 2, 3, 4, 5, 6, 7, 8, 9, 10 or 15. May be followed by BP, TB, or Q#

(# = 1 thru 8).

Cat. No. VM5M; followed by 40; followed by 0, 1, 2, 3, 4, 5, 6, 7, 8, 9, 10 or 15. May be followed by BP, TB, or Q# (# = 1 thru 8).

The VM5 series ballast tank assemblies are intended for use with the following Listed Fixture Fittings for hazardous locations. Not all combinations are covered.

Optics , Cat. Nos: VMG40, VZRG4050, VZRG4020, VMER40.

External guards , Cat. Nos: VMAG40S, VMRWG, VMERG.

External reflectors , Cat. Nos: VMPSD40, VMPA40, HRD400, HRD400ALZ.

Mounting splice boxes, Cat. Nos: VMA2B, VMA3B, VMF2B, VMF3B, VMX2B, VMX3B, VMX6B, VMX7B, VMX8B, VMX9B, VMB2B, VMB3B, VMC2B, VMC3B, VMD4B, VMD5B, VMS4B, VMS5B, VMB10B, VMB8B, VMB810B.

Class I, Divisions 2, Groups A, B, C and D.

Cat. No. VM5S; followed by 25, 40 or 60; followed by 0, 1, 2, 3, 4, 5, 6, 7, 8, 9, 10 or 15. May be followed by BP, P# (# = 1, 2 or 3), TB, or Q# (# = 1 thru 8).

Cat. No. VM5H; followed by 25, 40; followed by 0, 1, 2, 3, 4, 5, 6, 7, 8, 9, 10 or 15. May be followed by BP, P# (# = 1, 2 or 3), TB, Q# (# = 1 thru 8).

Cat. Nos. VM5P or VM5E; followed by 17, 25, 32, 35, 40; followed by 0, 1, 2, 3, 4, 5, 6, 7, 8, 9, 10 or 15. May be followed by BP, P# (# = 1, 2 or 3), TB, Q# (# = 1 thru 8).

Cat. No. VM5M; followed by 40; followed by 0, 1, 2, 3, 4, 5, 6, 7, 8, 9, 10 or 15. May be followed by BP, P# (# = 1, 2 or 3), TB, Q# (# = 1 thru 8).

The VM5 series ballast tank assemblies are intended for use with the following Listed Fixture Fittings for hazardous locations. Not all combinations are covered.

Optics , Cat. Nos: VMG40, VZRG4050, VZRG4020, VMER40.

External guards , Cat. Nos: VMAG40S, VMRWG, VMERG.

External reflectors , Cat. Nos: VMPSD40, VMPA40, HRD400, HRD400ALZ.

Mounting splice boxes, Cat. Nos: VMA2B, VMA3B, VMF2B, VMF3B, VMX2B, VMX3B, VMX6B, VMX7B, VMX8B, VMX9B, VMB2B, VMB3B, VMC2B, VMC3B, VMD4B, VMD5B, VMS4B, VMS5B, VMB10B, VMB8B, VMB810B.

Trademark and/or Tradename: "E10514", "Killark/Chalmit"

Last Updated on 2016-05-31

The appearance of a company's name or product in this database does not in itself assure that products so identified have been manufactured under UL's Follow-Up Service. Only those products bearing the UL Mark should be considered to be Certified and covered under UL's Follow-Up Service. Always look for the Mark on the product.

UL permits the reproduction of the material contained in the Online Certification Directory subject to the following conditions: 1. The Guide Information, Assemblies, Constructions, Designs, Systems, and/or Certifications (files) must be presented in their entirety and in a non-misleading manner, without any manipulation of the data (or drawings). 2. The statement "Reprinted from the Online Certifications Directory with permission from UL" must appear adjacent to the extracted material. In addition, the reprinted material must include a copyright notice in the following format: "© 2020 UL LLC"

Certification Record

Contact an Expert (https://www.csagroup.org/contact/)

CUSTOMER	CLASS	FILE NUMBER
Killark, Div of Hubbell Inc. (Delaware) 2112 Fenton Logistics Park Blvd, Fenton Missouri United States 63026	3428-03 (../class/?class=3428-03) FIXTURES AND FITTINGS-For Hazardous Locations	011713_C_000

Conduction Expert (https://www.csagroup.org/contact/)

Class I, Groups C and D; Class II, Groups E, F and G; Class III;
(Temperature Coded), CSA Encl. 3 and 4 (component packaged):

- Series "HZ" integral ballast with or without aux. quartz lamp 100 or 150W, (for Div 1 only) 480V max, 60Hz, pendent ceiling, bracket, bulk-head or stanchion mount, max 400W high pressure sodium; 250 and 400W mercury vapour or metal halide. Suffix letters and digits following Series "HZ" denote lamp type, wattage, voltage, guard option, mounting, conduit , globe and aux. lamp options.
- Temperature coded as follows: HPS without quartz lamp (T3C), with quartz lamp (T2D). 200 and 400W, MH and MV, without quartz lamp (T3A), with quartz lamp (T2D).

Class I, Groups C and D; Class II, Groups E, F and G; Class III; (Temperature Coded); CSA Encl 3, 4, 4X:
Class I, Division 2, Groups B, C and D; Class II, Division 2, Groups E, F and G; Class III; CSA Encl 3, 4, 4X:

- Series EZ luminaires, mercury vapour (MV), metal halide (MH) or high pressure sodium (HPS) and EZL - LED, 190W max; 50/60 Hz, 480 VAC max or 250VDC max; lamp wattage 400 W max; 60 Hz, 600 V max.

Note: Suffixes letters/numerals denote Lamp Type, Lamp Ratings, Voltage, Mounting and Options.
Temperature coded as follows:

Cat No	Lamp W	Type+	Rated Ambient C	Class I Div. 1 Groups	Suitable For Simultaneous Use In Class Groups C, D and Class II, Groups
*EZS50	50	HPS	40	C,D 120(T4A)	E,F,G 160 (T3C)
EZS50	50	HPS	55	C,D 120(T4A)	E,F,G 160 (T3C)
EZS50	50	HPS	65	C,D 120(T4A)	E,F,G 165 (T3B)
*EZS07	70	HPS	40	C,D 120(T4A)	E,F,G 160 (T3C)
EZS07	70	HPS	55	C,D 120(T4A)	E,F,G 160 (T3C)
EZS07	70	HPS	65	C,D 120(T4A)	E,F,G 165 (T3B)
*EZS10	100	HPS	40	C,D 120(T4A)	E,F,G 160 (T3C)
EZS10	100	HPS	55	C,D 120(T4A)	E,F,G 160 (T3C)
EZS10	100	HPS	65	C,D 120(T4A)	E,F,G 165 (T3B)
EZS15	150	HPS	40	C,D 120(T4A)	E,F,G 160 (T3C)
EZS15	150	HPS	55	C,D 120(T4A)	E,F,G 160 (T3C)

(https://www.csagroup.org/) Testing & Certification Standards About Careers Store Contact English

Contact an Expert

We're always here to help. Let's talk.

We're here to answer your questions and help you get started right away. Call or send us a message anytime.

Contact Us (https://www.csagroup.org/contact)

Contact an Expert (https://www.csagroup.org/contact/)

(https://www.csagroup.org)

FAQs (/faq/)

CSA OnDemand™ (http://store.csagroup.org/ondemand/s/?language=en_US)

Informs & Notices (/informs-notices/)

Submit an Incident Report (/submit-a-report)

Agreement on Acceptance of Components (/agreement-acceptance-components/)

CSA Communities (http://community.csagroup.org/login.jspa?referer=%252Findex.jspa)

Product Alerts & Recalls (/product-alerts-recalls/)

Report Suspect Counterfeit Marks (/testing-certification/marks-labels/brand-protection/reporting-suspect-counterfeit-marks)

Resources & Insights (/resources-insights/)

Standards Research (/standards/standards-research/)

CSA Group Product Listing (/testing-certification/product-listing/)

Sign up for our Newsletter (https://www.csagroup.org/newsletter/)

(http://www.facebook.com/CSAGroup/) (http://www.linkedin.com/company/csa-group/) (http://www.youtube.com/timelines/) (https://www.csagroup.org/standards/)

Legal (https://www.csagroup.org/legal/) Privacy Policy (https://www.csagroup.org/legal/privacy-policy/)

Evidence of Insurance (https://www.csagroup.org/legal/evidence-of-insurance/) HSSE Policy (https://www.csagroup.org/hsse-policy/)

Accreditation (https://www.csagroup.org/accreditation/) Annual Report (https://www.csagroup.org/annual-report/)

© 2020 CSA Group (https://www.csagroup.org)

Certification

Manufacturer: Larson Electronics LLC
Address: 9419 US-HWY 175
Kemp, Texas 75143

Declare the following equipment conforms to the standard(s) as listed:

Model: EPSL-80-XX-YY
Description: Explosion Proof Jellyjar Light

Evaluated Listings:

CE: EN 60598-2-5:2015
CE: EN 62560:2012/AC:2015

The EPSL-80-XX-YY Series complies with the essential protection requirements of the European Parliament of the Council Directive 2014/34/EU on the approximation of the laws of the Member States relating to electrical apparatuses operating within the range of 50-1000 volts AC or 75-1500 volts DC. This certification applies to all specimens manufactured in accordance to the manufactures drawings.

Signed for and on behalf of: Larson Electronics, LLC
Place of issue: Kemp, TX

Signature: James Thomas

Name: James Thomas
Position: Operations Manager

LARSON ELECTRONICS LLC • 9419 E US HWY 175 • KEMP, TX 75143
p: 1-800-369-6671 • intl: 903-498-3363 • f: 903-498-3364 • sales@larsonelectronics.com

Larson Electronics LLC
9419 E US HWY 175, Kemp, TX 75143
Phone: 800.369.6671

www.LarsonElectronics.com
Email: sales@LarsonElectronics.com
Fax: 903.765.7664

Frequently Asked Questions (FAQ)

There are no Faqs