Larson Electronics LLC
9419 E US HWY 175, Kemp, TX 75143
Phone: 800.369.6671

www.LarsonElectronics.com
Email: sales@LarsonElectronics.com
Fax: 903.498.3364

HALP-24-2L

Hazardous Location Light Fixture, Non-Metallic, (2) 2' Fluorescent Lamps, Corrosion Resistant, Marine Application, C1D2/C2D2

Product ID: 45351



Larson Electronics LLC manufactures a wide variety of products, including custom built to spec designs. The pictures displayed for this unit are a general representation of form factor for the product line and may not accurately represent this exact configuration in every detail due to custom builds and changes between similar products in our standard catalog. The specifics for this configuration are listed in the specification table and supporting documentation (CAD files, Dimensional Drawing, Name Plate Diagram, Wiring Diagram, etc.). This means that specific details (receptacles, plugs, wires, connections, mounting brackets, external finishes, etc.) may not be accurately represented in images vs specifications. Please review specifications and do not order based solely on images.

HALP-24-2L - Hazardous Area Fluorescent Light

Listing: United States - Canada

Lamp Type: 2' Fluorescent
Surface Dimensions: 25.88"-L x 7.975"-W x 5.1"-H
Pendant Dimensions: 25.88"-L x 7.205"-W x 5.425"-H
Weight: 12.5 lb

Voltage: Universal 120-277V AC, 50/60 Hz
Total Watts: 48W (T5HO), 32W (T8), or 60W (T12HO)
Total Lumens: 5,000 (T5HO), 3000 (T8), or 4050 (T12HO)
Lamp Life (Hours): 20,000 (T5HO), 24,000 (T8), 12,000 (T12HO)
Efficiency (Lumens per Watt): 104.1 (T5HO), 94.75 (T8), 67.5 (T12HO)

Color Temp: 5000K (T5HO) or 4100K (T5HO, T8, T12HO)
Replacement Lamp: -
Beam Angle: 160° Horizontal, 116.5° Vertical
Dimming Function: No
Lighting Configuration: Flood
Power Efficiency: -
Power Factor: -
Ambient Operating Temp Range: -20°C to +70°C
Operating Temp Rating: T4
Minimum Operating Temp: -30°C
Maximum Case Temp: +90°C
Housing Material: Fiberglass Reinforced Polyester Housing
Lens Material: Shatter/Impact Resistant Acrylic Diffuser
Gasket Material: Neoprene
Mounting: Flange Type Surface Mount or Pendant Mount

Ratings/Approvals

Listed for United States and Canada
Class I, Division 2, Groups A, B, C, D
Class II, Division 2, Groups F, G
NRTL Certified to UL 844
NRTL Certified to UL 1598A Marine Type (Saltwater)
NRTL Certified to C22.2 No. 137
NRTL Certified to C22.2 No. 250.0
Meets USCG Specifications
California Title 24 Compliant
T4C Temperature Rating
Non-Corrosive Construction
Non-Metallic Housing Pan & Lens
Made in the USA
BAA Compliant
Silicone Free
CE Certified
Field Serviceable

Special Orders - Special Requirements

Contact us for special requirements

Toll Free: 1-800-369-6671
Intl: 1-903-270-1187
Fax: 1-903-498-3364

Wiring Hub: 1/2" or 3/4" NPT

E-mail: sales@larsonelectronics.com

***Wattage totals are lamps only and may vary with different lamps.**

Made in the USA

The HALP-24-2L from Larson Electronics is a Hazardous Area Fluorescent Light Fixture that is U.S./Canada approved Class I Division 2 Groups A, B, C and D and is specifically designed to handle the rigors of wet and corrosive marine environments. This hazardous location fluorescent light has a T4C temperature rating and carries a United States Coast Guard approval, making it ideal for applications such as oil rigs, ships, offshore applications, petrochemical, manufacturing, chemical storage, and water treatment centers.

This two foot long, two lamp fluorescent fixture is ideal for operators seeking a top quality hazardous location light that will reduce operating costs, improve lighting quality, and reduce downtime incurred from frequent servicing intervals. The HALP-24-2L hazardous area fluorescent light fixture is designed for use in wet areas and saltwater-marine environments where corrosion resistance is critical to equipment longevity and safety. This Class I Division 2 rated fixture is constructed of non-corrosive materials including a polyester housing reinforced with glass fiber, a poured in gasket for reliable sealing, and an impact resistant acrylic diffuser. Corrosion resistant plastic latches secure the lamp cover to the housing and provide a firm lock against the poured in seal to prevent drips and water intrusion.



HALP-24-2L Surface Mount

Click Photo to Enlarge



HALP-24-2L

Click Photo to Enlarge



HALP-24-2L Pendant Mount

Click Photo to Enlarge



HALP-24-2L with T8 lamps

Click Photo to Enlarge



HALP-24-2L with T5HO lamps

Click Photo to Enlarge

NOTE ON LAMPS: This fixture comes equipped with two T5HO, T8, or T12HO fluorescent lamps. The T5/850/HO 24 Watt lamps produce 2,500 lumens per bulb for 5,000 lumens per fixture, a 5000 or 4100 Kelvin color, and a 20,000 hour rated service life. The T8/841 16 watt lamps produce 1,500 lumens per bulb for 3,000 lumens per fixture, a 4100 Kelvin color, and a 24,000 hour rated service life. The T12/HO 30 watt lamps produce 2,025 lumens per bulb for 4,050 lumens per fixture, and a 12,000 hour rated service life. The HALP-24-2L has an electronic universal voltage ballast and operates on a range of voltages from 120V to 277V AC 50/60Hz including: 120 Volt 60 HZ, 220 Volt 50 HZ, 240 Volt 60 HZ and 277 Volts 60 HZ.

The HALP-24-2L is NRTL Listed to UL 844 for Class I Division 2, Groups A, B, C, D hazardous locations. This fixture is also NRTL Listed to UL 1598A for outdoor

marine type luminaires, and meets US Coast Guard specifications. This light fixture offers the extreme durability in a proven hazardous location fixture design, making it a reliable and affordable lighting solution for open areas where flammable chemicals and vapors may occasionally be present.
Click here to read the NEC description for explosion proof and hazardous locations.
Mounting Options: Unless otherwise specified, our standard, most popular configuration is the flange mount shown enlarged below. We also offer a pendant mount for those needing to suspend the fixture away from the ceiling surface (i.e. suspend from pipe or conduit). Additional mounting configurations can be customized to meet the requirements on the application. Please contact us for special mounting configurations.



Click Photo to Enlarge

Standard Flange Brackets: Flange type aluminum mounts attached at each end of the fixture enables it to be simply secured to any surface. The mounts provide some shock absorbency protection while enabling the user to simply mount the fixture with the through-hole taps that protrude on each side of the fixture. The mounting holes are 14.91" inches on center apart along the top of this hazardous location light. The mounting holes are 9.5" inches on center across the top of the light.



Click Photo to Enlarge

Standard Suspension Mounting: This light fixture can hang from the ceiling suspected by rigid pipe. Each fixture is equipped with either two 1/2" or 3/4" NPT hubs on either side of the fixture. Operators will bring rigid pipe down to the threaded mounting ups. The wiring is fed down through the rigid pipe to one of the NPT hubs and tied to the fixture's lead wires to complete the electrical connection. The remaining pendant hub provides support for the opposite end of the fixture.
Suggested Applications: The HALP-24-2L is designed for marine wet and damp locations, where corrosion resistant fluorescent lights are required. This includes petrochemical facilities, lubrication pits, oil drilling rigs, crew quarters, solvent/cleaning areas, water treatment areas, processing plants, and marine loading docks.
At Larson Electronics, we do more than meet your lighting needs. We also provide replacement, retrofit, and upgrade parts as well as industrial grade power accessories. Our craftsmen can custom build any lighting system and/or accessories to fit the unique demands of your operation. A commitment to honesty, quality, and dependability has made Larson Electronics a leader in the lighting and electronics business since 1973. Contact us today at 800-369-6671 or message sales@larsonelectronics.com for more information about our custom options tailored to meet your specific industry needs.

REV	DESCRIPTION	DATE
A	PRODUCTION RELEASE	10-02-2023

HALP-24-2L-T5HO-SFC-0-75IN

LARSON ELECTRONICS®

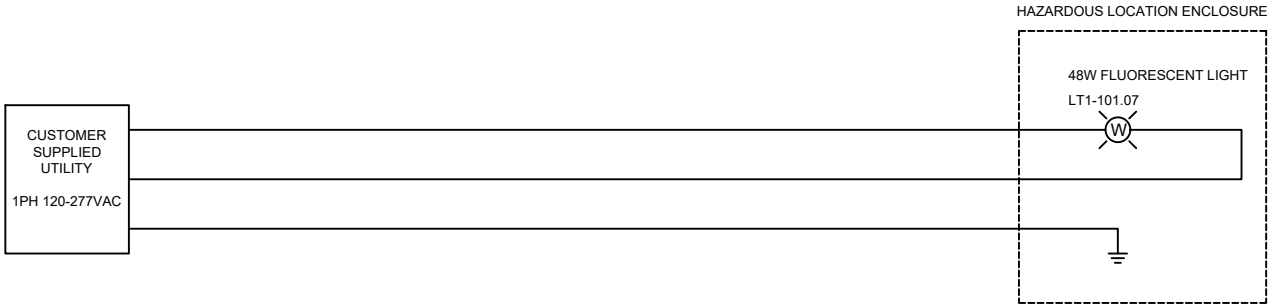

TAGS	QTY	CATALOG	DESCRIPTION
LT1-101.07	1	UNV00004664	C1D2 2FT LAMP T5HO BULBS 120-277VAC

LARSON ELECTRONICS

9419 E US HWY 175,
KEMP, TX 75143

TITLE: HALP-24-2L-T5HO-SFC-0-75IN

DRAWN BY	DATE	REV
J.Maldonado	10-02-2023	A
CHECKED BY	SHEET #	DRAWING #
S.Desai	1 OF 1	101

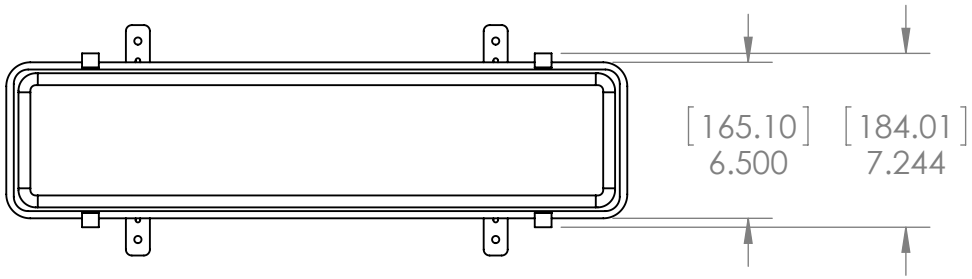

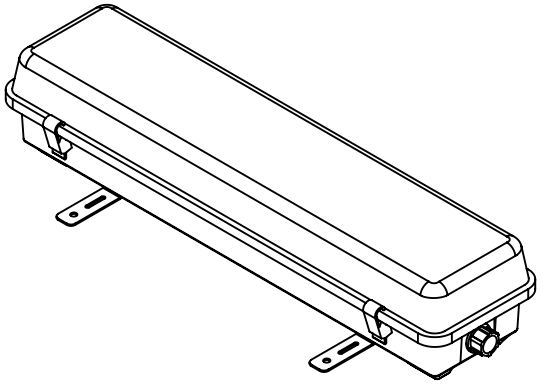

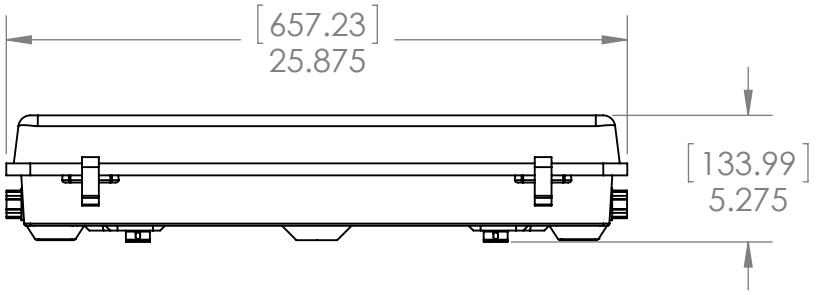

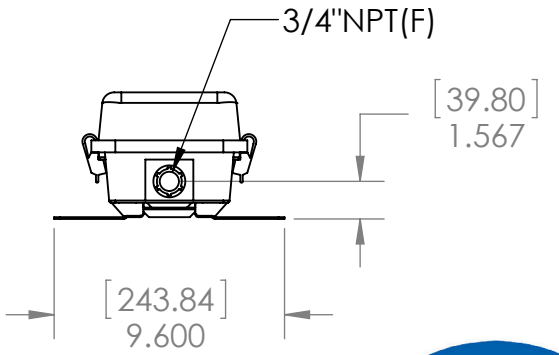

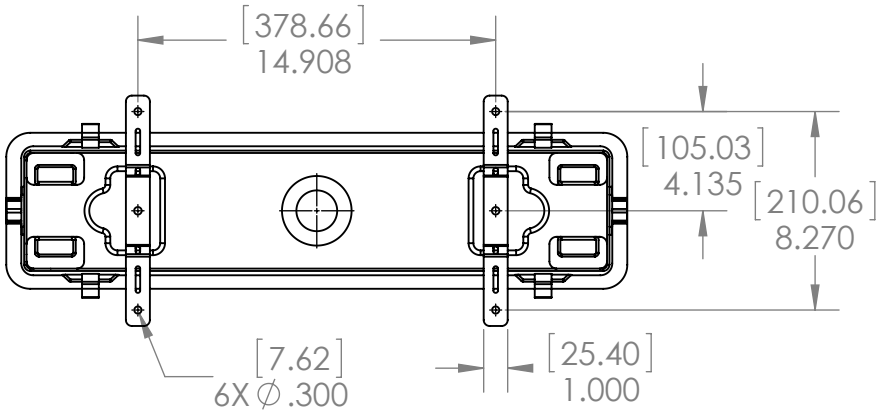

Larson Electronics

TITLE:

HALP-24-2L-SFC

PROPRIETARY AND CONFIDENTIAL
THE INFORMATION CONTAINED IN THIS DRAWING IS THE SOLE PROPERTY OF LARSON ELECTRONICS LLC. ANY REPRODUCTION IN PART OR AS A WHOLE WITHOUT THE WRITTEN PERMISSION OF LARSON ELECTRONICS LLC IS PROHIBITED.

		NAME
DIMENSIONS ARE IN INCHES	DRAWN	CHRIS THAUER
MATERIAL	CHECKED	JEREMY BLANKENSHIP
DO NOT SCALE DRAWING		

SIZE	DWG. NO.	REV
A		

SCALE: 1:8 SHEET 1 OF 1

5 4 3 2 1

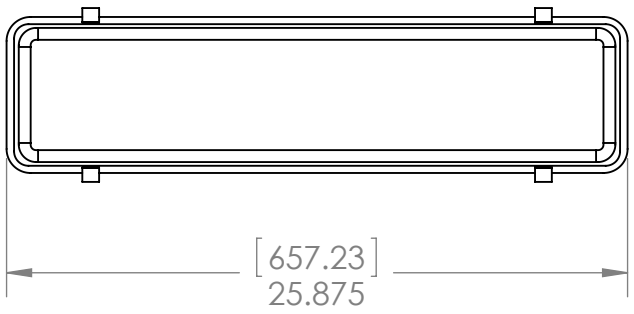

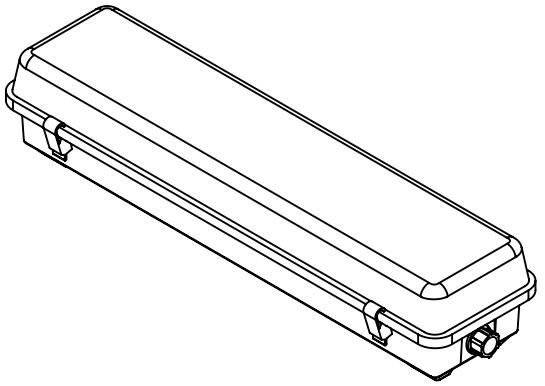

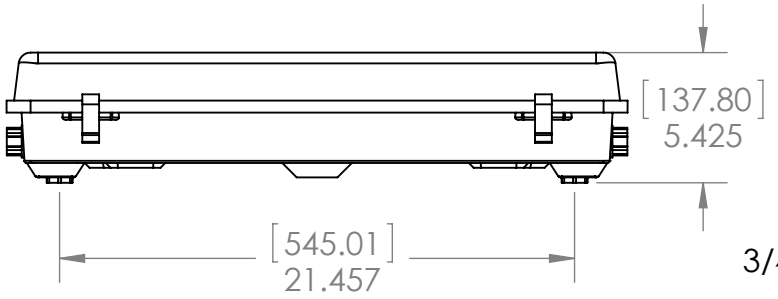

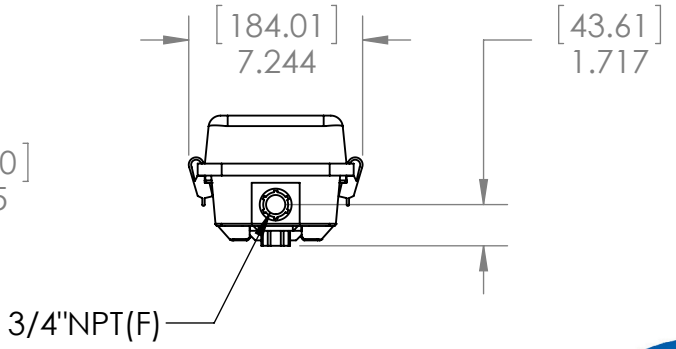

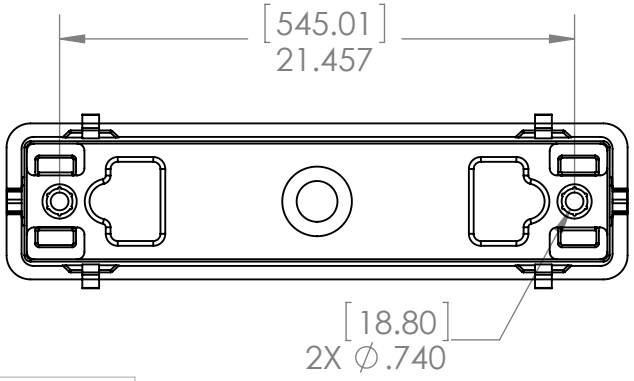

Larson Electronics

TITLE:

HALP-24-2L-PND

PROPRIETARY AND CONFIDENTIAL
THE INFORMATION CONTAINED IN THIS DRAWING IS THE SOLE PROPERTY OF LARSON ELECTRONICS LLC. ANY REPRODUCTION IN PART OR AS A WHOLE WITHOUT THE WRITTEN PERMISSION OF LARSON ELECTRONICS LLC IS PROHIBITED.

		NAME
DIMENSIONS ARE IN INCHES	DRAWN	CHRIS THAUER
MATERIAL	CHECKED	JEREMY BLANKENSHIP
DO NOT SCALE DRAWING		

SIZE	DWG. NO.	REV
A		

SCALE: 1:8 SHEET 1 OF 1

5 4 3 2 1









Material Safety Data Sheet

To Whom It May Concern,

The external housing and ballast contained within Larson Electronics LLC EPL, EPLC2, FTL, GAU, GVP, HAL, HALP, HALD, HAL-LI, HALS, HALSS, IND, and WAL industrial line of fluorescent lights without emergency backup for hazardous locations are considered "ARTICLES" under 29 CFR 1910-1200, the OSHA Hazard Communication Standard, and do not require a Material Safety Data Sheet (MSDS). This document does not expire.

Articles are specifically exempt from the regulations of this standard. OSHA defines an article as follows:

1910-1200(c) – Article means a manufactured item other than a fluid or particle:

i. Which is formed to a specific shape or design during manufacture;
ii. Which has end use function(s) dependent in whole or in part upon its shape or design during end use; and
iii. Which under normal conditions does not release more than very small quantities.

The "hazardous location" and "explosion proof" are terminology for the environment where these products will be installed. This is not to be confused with "hazardous materials;" this product does not contain any hazardous materials.

The fluorescent lamp installed within the light fixture requires a Material Safety Data Sheet (MSDS). The MSDS for fluorescent lamps are contained in the following pages. Specific MSDS depends on lamp ordered.

Regards,

Ray Smith

Ray Smith
Larson Electronics, LLC.

LARSON ELECTRONICS LLC • 9419 E US HWY 175 • KEMP, TX 75143
p: 1-800-369-6671 • intl: 903-498-3363 • f: 903-498-3364 • sales@larsonelectronics.com

PHILIPS

Philips Lighting Company

MATERIAL SAFETY DATA SHEET

PRODUCT: ALTO™ Fluorescent T8 U-Bent Lamp (F32 T8/TL 800 Series)

SECTION 1: MANUFACTUERER

Manufacturer's Name and Address:

Philips Lighting Company
A Division of Philips Electronics
North America Corporation
200 Franklin Square Drive
P.O. Box 6800
Somerset, NJ 08875

Emergency Telephone Number: (800) 424-9300 CHEMTREC
Other Information Calls: (732) 563-3197 Safety and Compliance

SECTION 2: HAZARDOUS INGREDIENTS

	OSHA (PEL) mg/m^3	ACGIH (TLV) mg/m^3	% by Wt.
Phosphor Powder			
Nuisance Dust	15	10	Approx. 2.5
Cerium Terbium Magnesium Aluminate*	N/A	10	Approx. .25
Barium Magnesium Aluminate*	N/A	1.0	Approx. .5
Yttrium Oxide (1314-36-9)	1.0	1.0	Approx. .5
Antimony*(7440-36-0)	.5	.5	Approx .01%
Manganese*(7439-96-5)	.5	.2	Approx .02%
Mercury (7439-97-6)	.1	.025	< than 20 ppm

*PEL and TLV are given for magnesium, aluminum oxide, yttrium, antimony, and mangenese. Barium aluminate is not a soluble compound. Antimony and Manganese are tightly bound within the crystal matrix of the phosphor (Calcium Phosphate).

SECTION 3: CHEMICAL/PHYSICAL DATA

Not applicable. This item is a light bulb. The bulb is glass, the base is a coated aluminum. The coating is inert.

SECTION 4: FIRE AND EXPLOSION DATA

FIRE AND EXPLOSION DATA NOT APPLICABLE -- under extreme heat, glass envelope might melt or crack.

SECTION 5: REACTIVITY DATA

Stability: Lamp is stable.
Polymerization: Not applicable.
Incompatibility: Glass will react with Hydrofluoric Acid.

SECTION 6: HEALTH HAZARD DATA

Not applicable to the intact lamp. Breakage of the lamp may result in some exposure to the phosphor powder dust and to a very little amount of elemental mercury vapor. No adverse affects are expected from occasional exposure to broken lamps, but as a matter of good practice, prolonged or frequent exposure should be avoided through the use of adequate ventilation during disposal of large quantities of lamps.

EMERGENCY FIRST AID: NORMAL FIRST AID PROCEDURE FOR GLASS CUTS IF SUCH OCCUR THROUGH LAMP BREAKAGE.

SECTION 7: PRECAUTIONS FOR SAFE HANDLING AND USE

Normal precautions should be taken for the collection of broken glass.

Waste Disposal Method: At the end of rated life, when this lamp is removed from service, it will be subjected to the current Toxic Characteristic Leaching Procedure (TCLP) prescribed by the Environmental Protection Agency. This test is used to determining whether an item is a hazardous waste or a non-hazardous waste under current E. P. A. definition. Philips Lighting will provide the test data on request. This result will allow the generator to evaluate all of the disposal options, which may be available in the particular state in which the generator's facility is located. The generator should check with federal, state and local officials for their guidance. In most states ALTO lamps are considered non-hazardous subtitle D waste. Philips encourages recycling of its products by qualified recyclers.

SECTION 8: CONTROL MEASURES

Respiratory Protection: Appropriate dust mask should be used if large quantities of lamps are being broken for disposal.

Ventilation: Avoid inhalation of any airborne dust. Provide local exhaust when disposing of large quantities of lamps.

Hand and Eye Protection: Appropriate hand and eye protection should be worn when disposing of large quantities of lamps or handling broken lamps.

SECTION 9: REGULATORY ISSUES

As a product these mercury containing lamps being shipped in the manufacturer's original packaging are not regulated by air, truck or ocean shipment. As a waste, spent ALTO fluorescent lamps maybe regulated in various states and local communities. This material safety data sheet does not constitute "knowledge of the waste", in certain jurisdictions. TCLP data will be furnished upon request.

SAFETY DATA SHEET

Issuing Date 04-Jan-2016 **Revision Date** 04-Jan-2016 **Revision Number** 3

The supplier identified below generated this SDS using the UL SDS template. UL did not test, certify, or approve the substance described in this SDS, and all information in this SDS was provided by the supplier or was reproduced from publically available regulatory data sources. UL makes no representations or warranties regarding the completeness or accuracy of the information in this SDS and disclaims all liability in connection with the use of this information or the substance described in this SDS. The layout, appearance and format of this SDS is © 2014 UL LLC. All rights reserved.

1. IDENTIFICATION OF THE SUBSTANCE/PREPARATION AND OF THE COMPANY/UNDERTAKING

Product identifier

Product Name **Philips T5 Flourescent Lamps**

Other means of identification

Synonyms None

Recommended use of the chemical and restrictions on use

Recommended Use Lights, Fluorescent

Uses advised against No information available

Details of the supplier of the safety data sheet

Supplier Name Philips Consumer Lifestyle

Supplier Address 1600 Summer St
Stamford
CT
06905
US

Supplier Phone Number Phone:203-351-5000
Fax:888-466-7352
Contact Phone479-464-2829

Supplier Email David.Harris@philips.com

Emergency telephone number

2. HAZARDS IDENTIFICATION

Classification

This chemical is not considered hazardous by the 2012 OSHA Hazard Communication Standard (29 CFR 1910.1200). This product is an article which is a CFL bulb and as such does not require an MSDS per the OSHA hazard communication standard unless ruptured. The hazards indicated are for a ruptured CFL bulb.

Acute toxicity - Oral	Category 4

GHS Label elements, including precautionary statements

Emergency Overview

Signal word **Warning**

Hazard Statements
Harmful if swallowed



This product is an article which contains a chemical substance. Safety information is given for exposure to the article as sold. Intended use of the product should not result in exposure to the chemical substance. This is a CFL bulb. In case of rupture: the above hazards exist.

Appearance White **Physical state** Solid **Odor** Odorless

Precautionary Statements - Prevention
Wash face, hands and any exposed skin thoroughly after handling
Do not eat, drink or smoke when using this product

Precautionary Statements - Response

Ingestion
IF SWALLOWED: Call a POISON CENTER or doctor/physician if you feel unwell
Rinse mouth

Precautionary Statements - Storage
None

Precautionary Statements - Disposal
Dispose of contents/container to an approved waste disposal plant

Hazards not otherwise classified (HNOC)

Not applicable

Unknown Toxicity
96 % of the mixture consists of ingredient(s) of unknown toxicity

Other information

Causes mild skin irritation

Interactions with Other Chemicals
No information available.

3. COMPOSITION/INFORMATION ON INGREDIENTS

.

Chemical name	CAS No	Weight-%	Trade Secret
Bis[2-(diphenylphosphino)phenyl] ether	166330-10-5	1 - 5	*

*The exact percentage (concentration) of composition has been withheld as a trade secret

4. FIRST AID MEASURES

First aid measures

General Advice First aid is upon rupture of sealed CFL bulb.

Eye contact Rinse thoroughly with plenty of water, also under the eyelids. If symptoms persist, call a physician.

Skin contact Wash with soap and water.

Inhalation Remove to fresh air.

Ingestion Do NOT induce vomiting. Rinse mouth immediately and drink plenty of water. Never give anything by mouth to an unconscious person. Call a physician.

Most important symptoms and effects, both acute and delayed

Most Important Symptoms and Effects No information available.

Indication of any immediate medical attention and special treatment needed

Notes to Physician Treat symptomatically.

5. FIRE-FIGHTING MEASURES

Suitable Extinguishing Media
Use extinguishing measures that are appropriate to local circumstances and the surrounding environment.

Unsuitable extinguishing media
CAUTION: Use of water spray when fighting fire may be inefficient.

Specific hazards arising from the chemical
No information available.

Explosion Data
Sensitivity to Mechanical Impact None.

Sensitivity to Static Discharge None.

Protective equipment and precautions for firefighters
As in any fire, wear self-contained breathing apparatus pressure-demand, MSHA/NIOSH (approved or equivalent) and full protective gear.

6. ACCIDENTAL RELEASE MEASURES

Personal precautions, protective equipment and emergency procedures

Personal precautions Avoid contact with skin, eyes or clothing. Use personal protective equipment as required.

Environmental precautions

Environmental precautions See Section 12 for additional Ecological Information.

Methods and material for containment and cleaning up

Methods for containment Prevent further leakage or spillage if safe to do so.

Methods for cleaning up Pick up and transfer to properly labeled containers.

7. HANDLING AND STORAGE

Precautions for safe handling

Handling In case of rupture: Handle in accordance with good industrial hygiene and safety practice. Avoid contact with skin, eyes or clothing. Do not eat, drink or smoke when using this product. Take off contaminated clothing and wash before reuse.

Conditions for safe storage, including any incompatibilities

Storage Keep containers tightly closed in a dry, cool and well-ventilated place. Keep out of the reach of children.

Incompatible Products None known based on information supplied.

8. EXPOSURE CONTROLS/PERSONAL PROTECTION

Control parameters

Exposure Guidelines This product, as supplied, does not contain any hazardous materials with occupational exposure limits established by the region specific regulatory bodies

Appropriate engineering controls

Engineering Measures Showers
Eyewash stations
Ventilation systems

Individual protection measures, such as personal protective equipment

Eye/face protection No special protective equipment required.

Skin and body protection No special protective equipment required.

Respiratory protection If exposure limits are exceeded or irritation is experienced, NIOSH/MSHA approved respiratory protection should be worn. Positive-pressure supplied air respirators may be required for high airborne contaminant concentrations. Respiratory protection must be provided in accordance with current local regulations.

Hygiene Measures Handle in accordance with good industrial hygiene and safety practice.

9. PHYSICAL AND CHEMICAL PROPERTIES

Physical and Chemical Properties

Physical state	Solid		
Appearance	White	**Odor**	Odorless
Color	No information available	**Odor Threshold**	No information available

Property	**Values**	**Remarks Method**
pH	No data available	None known
Melting / freezing point	No data available	None known
Boiling point / boiling range	No data available	None known
Flash Point	No data available	None known
Evaporation Rate	No data available	None known
Flammability (solid, gas)	No data available	None known
Flammability Limit in Air		
Upper flammability limit	No data available	
Lower flammability limit	No data available	
Vapor pressure	No data available	None known
Vapor density	No data available	None known
Specific Gravity	No data available	None known
Water Solubility	incompatible	None known
Solubility in other solvents	No data available	None known
Partition coefficient: n-octanol/water	No data available	None known
Autoignition temperature	No data available	None known
Decomposition temperature	No data available	None known
Kinematic viscosity	No data available	None known
Dynamic viscosity	No data available	None known
Explosive properties	No data available	
Oxidizing properties	No data available	

Other Information

Softening Point	No data available
VOC Content (%)	No data available
Particle Size	No data available
Particle Size Distribution	

10. STABILITY AND REACTIVITY

Reactivity

No data available.

Chemical stability
Stable under recommended storage conditions.
Possibility of Hazardous Reactions
None under normal processing.
Conditions to avoid
None known based on information supplied.
Incompatible materials
None known based on information supplied.
Hazardous Decomposition Products
None known based on information supplied.

11. TOXICOLOGICAL INFORMATION

Information on likely routes of exposure

Product Information	Product does not present an acute toxicity hazard based on known or supplied information. In case of rupture:.
Inhalation	Specific test data for the substance or mixture is not available.
Eye contact	Specific test data for the substance or mixture is not available.
Skin contact	Specific test data for the substance or mixture is not available.
Ingestion	Specific test data for the substance or mixture is not available. Harmful if swallowed. (based on components).
Component Information	No information available

Information on toxicological effects

Symptoms	No information available.

Delayed and immediate effects as well as chronic effects from short and long-term exposure

Sensitization	No information available.
Mutagenic Effects	No information available.
Carcinogenicity	Contains no ingredient listed as a carcinogen.
Reproductive toxicity	No information available.
STOT - single exposure	No information available.
STOT - repeated exposure	No information available.
Target Organ Effects	None known.

Aspiration Hazard No information available.

Numerical measures of toxicity Product Information

The following values are calculated based on chapter 3.1 of the GHS document

ATEmix (oral)
500.00 mg/kg

12. ECOLOGICAL INFORMATION

Ecotoxicity
The environmental impact of this product has not been fully investigated.

Persistence and Degradability
No information available.

Bioaccumulation
No information available

Other adverse effects
No information available.

13. DISPOSAL CONSIDERATIONS

Waste treatment methods

Disposal methods This material, as supplied, is a hazardous waste according to federal regulations (40 CFR 261).

Contaminated Packaging Dispose of contents/containers in accordance with local regulations.

US EPA Waste Number D009

California Hazardous Waste Codes M003

14. TRANSPORT INFORMATION

DOT NOT REGULATED
Proper Shipping Name NON REGULATED
Hazard Class N/A

TDG Not regulated

MEX Not regulated

ICAO Not regulated

IATA Not regulated
Proper Shipping Name NON REGULATED
Hazard Class N/A

IMDG/IMO Not regulated
Hazard Class N/A
Marine Pollutant Product is a marine pollutant according to the criteria set by IMDG/IMO This product contains a chemical which is listed as a severe marine pollutant according to IMDG/IMO

RID Not regulated

ADR Not regulated

ADN Not regulated

15. REGULATORY INFORMATION

International Inventories

TSCA	Complies
DSL	All components are listed either on the DSL or NDSL.

TSCA - United States Toxic Substances Control Act Section 8(b) Inventory
DSL/NDSL - Canadian Domestic Substances List/Non-Domestic Substances List

US Federal Regulations

SARA 313
Section 313 of Title III of the Superfund Amendments and Reauthorization Act of 1986 (SARA). This product does not contain any chemicals which are subject to the reporting requirements of the Act and Title 40 of the Code of Federal Regulations, Part 372

SARA 311/312 Hazard Categories

Acute Health Hazard	No
Chronic Health Hazard	No
Fire Hazard	No
Sudden release of pressure hazard	No
Reactive Hazard	No

CWA (Clean Water Act)
This product does not contain any substances regulated as pollutants pursuant to the Clean Water Act (40 CFR 122.21 and 40 CFR 122.42)

CERCLA
This material, as supplied, does not contain any substances regulated as hazardous substances under the Comprehensive Environmental Response Compensation and Liability Act (CERCLA) (40 CFR 302) or the Superfund Amendments and Reauthorization Act (SARA) (40 CFR 355). There may be specific reporting requirements at the local, regional, or state level pertaining to releases of this material

US State Regulations

California Proposition 65
This product contains the following Proposition 65 chemicals.

Chemical name	California Proposition 65
Mercury - 7439-97-6	Developmental

U.S. State Right-to-Know Regulations

.

Chemical name	New Jersey	Massachusetts	Pennsylvania	Rhode Island	Illinois
Mercury 7439-97-6	X	X	X	X	X

International Regulations

Canada
WHMIS Hazard Class
Non-controlled

16. OTHER INFORMATION

NFPA	**Health Hazards** 1	**Flammability** 0	**Instability** 0	**Physical and Chemical Hazards** -
HMIS	**Health Hazards** 0	**Flammability** 0	**Physical Hazard** 0	**Personal Protection** X

Prepared By
Product Stewardship
23 British American Blvd.
Latham, NY 12110
1-800-572-6501

Issuing Date 04-Jan-2016
Revision Date 04-Jan-2016
Revision Note No information available

Disclaimer
The information provided in this Safety Data Sheet is correct to the best of our knowledge, information and belief at the date of its publication. The information given is designed only as a guidance for safe handling, use, processing, storage, transportation, disposal and release and is not to be considered a warranty or quality specification. The information relates only to the specific material designated and may not be valid for such material used in combination with any other materials or in any process, unless specified in the text

End of Safety Data Sheet

PHILIPS

Philips Lighting Company

MATERIAL SAFETY DATA SHEET

PRODUCT: T-5 Silhouette Standard and HO

Revised: 8/02

SECTION 1: MANUFACTURER

Manufacturer's Name and Address: Philips Lighting Company
A Division of Philips Electronics
North America Corporation
200 Franklin Square Drive
PO Box 6800
Somerset, NJ 08875

Emergency Telephone Number: (800) 424-9300 CHEMTREC
(732) 563-3197 Safety and Compliance

Other Information Calls: (732) 563-3089

SECTION 2: HAZARDOUS INGREDIENTS

	OSHA PEL	ACGIH	PERCENTAGE
Phosphor Powder			
Nuisance dust	15 mg/m3	10mg/m3	approx. 2.5%
Yttrium Oxide: Europium (68585-82-0)	1mg/m3	1mg/m3	approx. .8%
Barium Carbonate (0513-77-9)	0.5mg/m3	0.5mg/m3	approx. .3%
Manganese Carbonate (598-62-9)	5.0mg/m3	5.0 mg/m3	approx. .3%
Aluminum Oxide (1344-28-1)	15 mg/m3	10 mg/m3	approx. .3%
Cerium Oxide			approx. .2%
Gadolinium Oxide			approx. .2%
Terbium Oxide (12036-41-8)			approx. .2%
Magnesium Oxide (1309-48-4)	15mg/m3	10mg/3	approx. .2%
Boric Oxide (1303-86-2)	10mg/m3	10mg/m3	approx. .2%
Mercury (7439-97-6)	.1mg/m3	.025mg/m3	less than .01%

These materials are essentially ceramic phosphors (except for the mercury). The ceramics are Barium Aluminate<Yttrium Oxide and a Cerium Terbium Borate mixture. The PELs and TLV are given where available for the base components. There is no data on the ceramic mixtures as mixtures.

SECTION 3: PHYSICAL CHEMICAL CHARACTERISTICS

Not applicable. These items are light bulbs with 5/8 inch diameter and various lengths up to a nominal five feet (lengths are actually metric).

SECTION 4: FIRE AND EXPLOSION DATA

Fire and explosion data not applicable. Under extreme heat glass envelope might melt or crack.

SECTION 5: REACTIVITY DATA

Stability:	Lamp is stable
Incompatibility:	Glass will react with Hydrofluoric Acid
Polymerization:	Not applicable

SECTION 6: HEALTH EFFECTS

Not applicable for the intact lamp. Breakage of the lamp may result in some exposure to the phosphor powder dust/and to elemental mercury vapor. No adverse affects are expected from occasional exposure to broken lamps, but as a matter of good practice, prolonged or frequent exposure should be avoided through the use of adequate ventilation during disposal of large quantities of lamps.

Emergency and First Aid Procedure: Normal first aid procedure for glass cuts if such occur through lamp breakage.

SECTION 7: PRECAUTIONS FOR SAFE HANDLING AND USE

Normal precautions should be taken for the collection of broken glass.

Waste Disposal Method: At the end of rated life, when this lamp is removed from service, it will be subjected to the current Toxic Characteristic Leaching Procedure (TCLP) prescribed by the Environmental Protection Agency. This test is used to determining whether an item is a hazardous waste or a non-hazardous waste under current E. P. A. definition. These lamps would fail the TCLP test and would be considered hazardous under the Universal Waste Rules. Generators should evaluate all of the disposal options, which may be available in the particular state in which the generator's facility is located. The generator should check with federal, state and local officials for their guidance. Philips encourages recycling of its products by qualified recyclers.

SECTION 8: CONTROL MEASURES

Respiratory Protection: None. NIOSH-approved respirator might be used if large volumes of lamps are being broken for disposal.

Ventilation: Avoid inhalation of any airborne dust.
Provide local exhaust when disposing large quantities of lamps.

Hand and Eye Protection: Appropriate hand and eye protection should be worn when disposing of lamps or handling broken glass.

SECTION 9: REGULATORY INFORMATION

As a product these mercury containing lamps being shipped in the manufacturer's original packaging are not regulated by air, truck or ocean shipment. As a waste, these spent fluorescent lamps would be regulated in various states and local communities. This material safety data sheet does not constitute "knowledge of the waste", in certain jurisdictions.

PHILIPS

PHILIPS

Philips Lighting Company

Lamp Material Data Sheet (LMDS)

LMDS #: TL12-13100A
Date: 12/31/2015

Product: Philips T12 Fluorescent Lamps – All Types

All ALTO, non-ALTO, Standard, HO, Circular, U-Bent and TuffGuard
All lengths, coatings, wattages

Section 1. Manufacturer and Contact Information

Philips Lighting North America Corporation
200 Franklin Square Drive
Somerset, NJ 08873-4186

24 HR Emergency Phone Number: (800) 424-9300 CHEMTREC
Other Information Calls: (800) 555-0050 Philips Lighting Technical Information

Section 2. Hazardous Ingredients/Identity Information

These lamps contain the following materials:

Material	(CAS #)	Exposure Limits OSHA PEL mg/m^3	ACGIH TLV mg/m^3	PERCENTAGE by weight
Glass	(65997-17-3)	15	10	~96.0%
Phosphor Powder As Nuisance Dust		15	10	~2.5%
Mercury	(7439-97-6)	0.1	0.025	~0.01%
Polyethylene Terephthalate (PET)	(25038-59-9)	-	-	~3.0%

Phosphor powders are ceramic phosphors. There is no data for the ceramics as mixtures. PET sleeving is applied to TuffGuard versions of the lamps to retain materials in the event of lamp breakage.

Section 3. Physical Properties

Not applicable to an intact lamp. These items are light bulbs 1 1/2 inch in diameter and range from 12 to 96 inches in length.

Section 4. Fire and Explosion Hazards

Not applicable to an intact lamp. If subjected to extreme heat, the glass, and plastic (if present), components of the lamp may crack or melt and may emit toxic fumes. Use extinguishing media appropriate for combustibles in the area.

Section 5. Reactivity

Not applicable to an intact lamp.

Section 6. **Health Hazards**

Not applicable to an intact lamp. Breakage of the lamp may result in some exposure to the phosphor powder and to elemental mercury. No adverse effects are expected from occasional exposure to broken lamps, but as a matter of good practice, prolonged exposure should be avoided through the use of adequate ventilation during the disposal of large quantities of lamps.

Guidance on cleaning up a broken lamp can be obtained from http://www2.epa.gov/cfl/cleaning-broken-cfl.

Emergency and First Aid Procedures: Apply normal first aid for glass cuts if such should occur through lamp breakage.

Section 7. **Lamp Disposal Procedures**

Normal precautions should be taken for the collection of glass particles in the event a lamp is broken.

Waste Disposal Method: All fluorescent lamps contain some amount of mercury. When a fluorescent lamp is to be disposed, it is subject to the current EPA Toxicity Characteristic Leaching Procedure (TCLP) disposal criteria. This test is used to determine if an item can be managed as hazardous or non-hazardous waste.

Philips low-mercury ALTO fluorescent lamps are identifiable by their characteristic green end caps. Philips ALTO lamps are TCLP compliant and can be managed as non-hazardous waste. Philips will provide TCLP test data upon request.

Philips non-ALTO lamps (with silver end caps) are not TCLP compliant and should be managed as a hazardous waste under the EPA Universal Waste Rules for fluorescent lamps.

All disposal options should be evaluated with respect to federal, state, and local requirements. Before disposing of waste lamps, check with federal, state, and/or local officials for current guidelines and regulations. Philips encourages recycling of its products through qualified recycling facilities.

Section 8. **Control Measures**

Respiratory Protection: None. NIOSH-approved respirator should be used if large quantities of lamps are being broken for disposal.
Ventilation: Avoid inhalation of any airborne dust. Provide local exhaust when disposing of large quantities of lamps.
Hand and Eye Protection: Appropriate hand and eye protection should be worn when disposing of lamps and/or handling broken glass.

Section 9. **Regulatory Information**

As a product, these mercury-containing lamps, when shipped in the manufacturer's original packaging, are not regulated by air, truck, or ocean shipment. As a waste, these lamps may be regulated in various states and local communities. This safety data sheet does not constitute "knowledge of the waste" in certain jurisdictions.

This document supercedes previous document: LMDS TL12-13100 issued 07/10/2013

Occupational Health and Safety Administration (OSHA) Material Safety Data Sheet (MSDS) requirements for materials are not applicable to manufactured articles in which individuals would not be subjected to materials contained in the article during its normally intended use. The information in this document is provided as a courtesy and is intended to provide relevant information in the event the articles it covers are encountered during unintended, or abnormal, circumstances.



[<- Back]

Product Description

Title: ELECTRIC LIGHTING FIXTURES FOR USE IN HAZARDOUS (CLASSIFIED) LOCATIONS

Company: LARSON ELECTRONICS LLC - Kemp, TX USA

Product Information: Trade Name(s): Magna Light., EPL.

LED Flood Light, Model Nos. EPLC2-HB-150LED-RT, EPLC2-LED-150W-RT, EPLC2-WPLED-150W-RT, EPLC2-HB-150LED-RT-48, EPLC2-HB-100LED-RT, EPLC2-HB-100LED-RT-UVA, EPL-HB-150LED-RT, EP-LED-150W-RT, EPL-WPLED-150W-RT, EPL-HB-150LED-RT-48, EPL-HB-100LED-RT, EPL-HB-100LED-RT-UVA, AL-12-IPS-LED-1224DC, HAL-24-IPS-LED-1224DC, HAL-36-IPS-LED-1224DC, HAL-48-IPS-LED-1224DC; followed by -UVA, -UVB, -UVC, -IR, -C, -VISUV, -VISIR, -VISRED, -VISBLU, -VISGRN, -VISAMB, -27K, -30K, -40K, -45K, -50K, -55K, -56K, -60K, -65K, -DAYLIGHT, -750NM, -770NM, -850NM, -940NM, -1550NM, -RED, -BLU, -GRN, -AMB, or -PRPL.

LED Fixed Lighting suitable for used in Class I, Division 1, Groups C, D. Class I, Division 2, Groups A, B, C & D, T6, -25°C to +40°C., Model Nos. EPL-LP-12-LED-SFC, EPL-LP-24-LED-SFC, EPL-LP-48-LED-SFC.LED Fixed Lighting suitable for used in Class I Division 1 Group B C and D, Class I Division 2 Group A B C and D, Class II Division 1 Group E F and G, Class II Division 2 Group F and G and Class III hazardous locations, T6, -25°C to +40°C., Model Nos. EPL-HB-100LED-RT, EPL-HB-150LED-RT, EPL-HB-200LED-RT, EPL-HB-240LED-RT, EPL-HB-300LED-RT.

LED High Bay Luminaires For use in:Class I, Division 1, Groups C and DClass I, Division 2, Groups A, B, C, DClass II, Division 1 Groups E, F and GClass II, Division 2 Group F and GClass IIIClass I Zone 1 Group IIB Class II Zone 21 Group IIIC C Series:Ambient temperature range -40ºC to 60ºC, T4D Series:Ambient temperature range -40ºC to 55ºC (20W-150W) and -40ºC to 45ºC (20W-220W), T4E Series:Ambient temeprature range -40ºC to 65ºC, F Series:Ambient temeprature range -40ºC to 65ºC,T4units over 100W have a T3 temperature codeG Series:Ambient temeprature range -40ºC to 65ºC,T4I Series:Ambient Temperature Range: -40ºC to +60ºC (20W-80W), T4 -40ºC to +40ºC (90W-120W), T4, Model Nos. EPL followed by LR; followed by 24 or 48; followedby 20, 30, 40, 50, 60, 70, 80, 90, 100, 110, or 120;followed by W; followed by LED; may be followedby D, followed by 1227; followed by 30K, 35K, 40K, 50K, 60K; followed by 15B to 360B.

Contact Us
ETL listed produ
are in doubt or
products that d
appear in the di
please request a
verification of
certification.
Americas+1-888
(or +1-847-660-
Email
etldirectory@in

Intertek Hor
Product Dire
DLP on mob

Inspector Cer
Get up-to-date
information on
from our Accred
our Certificatior
Marks. Learn m

News
Intertek Unveils
Design for Prod
and Quality Cer
Marks. Learn m

LED Light, Model Nos. HAL-7W-LED-XX-Y-ZZZ, HAL-XX-YYY-LED-XX-T-ZZZZ, HAL-31L-LV-XX-Y-ZZZZ, HAL-60W-HV-XX-Y-ZZZZ.

LED Lighting suitable for used in Class I Division 1 Group C and D, Class I Division 2 Group A B C and D, Class II Division 1 Group E F and G, Class II Division 2 Group F and G and Class III hazardous locations, T6, -25°C to +40°C. , Model Nos. EPL-MJ-15W-1227, EPL-MJ-15W-3480, EPL-MJ-15W-1247, EPL-MJ-25W-1227, EPL-MJ-25W-3480, EPL-MJ-25W-1247, EPL-MJ-50W-1227, EPL-MJ-50W-3480, EPL-MJ-50W-1247, EPL-MJ-15-1227, EPL-MJ-25-1227, EPL-MJ-15WH-1227, EPL-MJ-25WH-1227.

Lighting for use in Class I Division 2, Groups A, B, C and D, Class II Divison 1 and 2, Groups E,F and G, Class III hazardous locations, T5. Model SP04, Model Nos. HAL-PRM-LED-R4, HAL-PRM-LED-R1, HAL-PRM-LED-R5, HAL-PRM-LED-R6, HAL-PRM-LED-R2, HAL-PRM-LED-R3, HAL-PRM-LED-R7.

Lighting for use in Class I Division 2, Groups A,B,C and D, Class II Divison 1 and 2,
Groups E,F and G, Class III hazardous locations, T5. Model SP05, Model Nos. HAL-LC-24-LED-R1,
HAL-LC-24-LED-R3, HAL-LC-24-LED-R2, HAL-LC-48-LED-R1, HAL-LC-48-LED-R3, HAL-LC-48-LED-R2.

Luminaires, Model Nos. HAL; followed by 24 of 48; followed by 2L; followed by T8,T5HO, LED or LEDT8; followed by SFC. For use in: Hazardous Locations: Class I, Div. 2, Groups A, B, C and D -20°C < Tamb < 40°C, T5.

Luminaires, Model Nos. HALSS; followed by EM; followed by 48; followed by 2L; followed by LED. For use in: Hazardous Locations Class I, Division 2, Groups A, B, C and D: 0°C < Tamb < 40°C, T4.

Luminaires, Model Nos. HALS; followed by 48; followed by 2L, 4L or 6L; followed by T8,T5HO,LED or LEDT8; followed by SFC. For use in: Hazardous Locations Class I, Division 2, Groups A, B, C and D Class II Division 2, Groups F and G -20°C < Tamb < 40°C, T3A, T3B, T3C, T5 or T6.

Luminaires, Model Nos. HALSS; followed by 48; followed by 2L; followed by LED, LEDT8,26 or 46; followed by SFC. For use in: Hazardous Locations Class I, Division 2, Groups A, B, C and D: -20°C < Tamb < 40°C IR2-4-2-26: T6 IR2-4-2-46: T3C IR2-4-2-LEDT8 and IR2-4-2-LED: T4.

Luminaires, Model Nos. HALP; followed by EM; followed by 24 or 48; followed by 2L; followed by T8,T5HO,LED or LEDT8. For use in: Hazardous Locations Class I, Division 2, Groups A, B, C and D: 0°C < Tamb < 40°C, T4.

Luminaires, Model Nos. HAL; followed by EM; followed by 24 or 48; followed by 2L; followed by T8,T5HO,T12,T12HO, LEDT8 or LED;

followed by SFC. For use in: Hazardous Locations Class I, Division 2, Groups A, B, C and D: 0°C < Tamb < 40°C, T4.

Luminaires, Model Nos. EPL; followed by EM; followed by 24 or 48; followed by 2L; followed by T8,T5HO,T12,T12HO, LEDT8 or LED; followed by SFC. For use in: Hazardous Locations Class I, Division 1, Groups C and D, Class II, Division 1, Groups E, F, G, Class III.

Luminaires for use in Hazardous Locations Class I, Division 1, Groups C and D, T5, T6 Class II, Division 1, Groups E, F, and G, T3B Class III 0°C < Tamb < 40°C, Model Nos. EPL-24-2L-T8-SFC, EPL-24-2L-T5-SFC, EPL-48-2L-T8-SFC, EPL-48-2L-T5H0-SFC, EPL-48-4L-T8-SFC, EPL-48-4L-T5HO, EPL-24-216-SFC, EPL-48-216-SFC.EPL- followed by 24 or 48; followed by 2L, 4L, 216, 416; followed by T8, 27, T5HO, 80; followed by SSFC.

LED Luminaire for use in Class I, Division 1&2, Groups C&D, T5 Hazardous Location, Model Nos. EPL-HB-50LED-RT; followed by -CM, -STNCH, -PT, -WM or -CLG; followed by -1227 or -1224; followed by -60DB, -100DB or -140DB; followed by -30K, -40K or -50K. EPL-HB-50LED-RT; followed by -CM, -STNCH, -PT, -WM, -CLG; followed by -1347 or -347V; followed by -60DB, -100DB or -140DB; followed by -30K, -40K or -50K. EPL-HB-50LED-RT; followed by -CM, -STNCH, -PT, -WM, -CLG; followed by -3480 or -480V; followed by -60DB, -100DB or -140DB; followed by -30K, -40K or -50K.

Luminaires, Model Nos. HAL-48-1L-LED-BMSW, HAL-48-2L-LED-BMSW, HAL-48-3L-LED-BMSW, HAL-24-1L-LED-BMSW, HAL-24-2L-LED-BMSW, HAL-24-3L-LED-BMSW. For use in Hazardous Locations, Class I, Division 2, Groups A, B, C and D; T3C, T4A or T5 -20°C < Tamb < 40°C.

Luminaires, EPL, Model Nos. EPL-24-2L-T8-SFC, EPL-24-2L-T5-SFC, EPL-48-2L-T8- SFC, EPL-48-2L-T5H0-SFC, EPL-48-4L-T8-SFC, EPL48-4L-T5HO, EPL-24-216-SFC, EPL-48-216-SFC. For use in: Hazardous Locations Class I, Division 1, Groups C and D, T5, T6 Class II, Division 1, Groups E, F, and G, T3B Class III

Luminaires, Model Nos. EPL-48-2L-LED-SFC, EPL-24-2L-LED-SFC. for use in Hazardous Locations: Class I, Div. 1, Groups C and D T5 or T6 -20°C < Tamb < 40°C Class II, Div. 1., Groups E, F, and G; Class III Div.1 T3B -20°C < Tamb < 40°C

Luminaires, Model Nos. HALP; followed by 24 of 48; followed by 2L or 3L; followed by LED; followed by SFC. For use in: Hazardous Locations Class I, Division 2, Groups A, B, C and D: Luminaires with “LEDT8” suffix: T4 -20°C < Tamb < 55°C Luminaires with “LED” suffix: T4 -20°C < Tamb < 40°C.

Evaluated to the following: A representative sample of the listed devices have been tested, investigated and found to comply with the requirements of the Standard(s) for Electric Lighting Fixtures for Use in Hazardous (Classified) Locations (UL-844) and are identified with the ETL Listed Mark.

<- Back

© 2010 Intertek All
All other product or service names are the property of their re

Frequently Asked Questions (FAQ)