Larson Electronics LLC
9419 E US HWY 175, Kemp, TX 75143
Phone: 800.369.6671

www.LarsonElectronics.com
Email: sales@LarsonElectronics.com
Fax: 903.765.7664

EPL-FL1524-50

26W Explosion Proof LED Aluminum Drop Light - C1D1 - 3380 Lumens - 50' SOOW Cord w/ General Area Cord Cap

Product ID: 45191

Image: EPL-FL1524-50

Larson Electronics LLC manufactures a wide variety of products, including custom built to spec designs. The pictures displayed for this unit are a general representation of form factor for the product line and may not accurately represent this exact configuration in every detail due to custom builds and changes between similar products in our standard catalog. The specifics for this configuration are listed in the specification table and supporting documentation (CAD files, Dimensional Drawing, Name Plate Diagram, Wiring Diagram, etc.). This means that specific details (receptacles, plugs, wires, connections, mounting brackets, external finishes, etc.) may not be accurately represented in images vs specifications. Please review specifications and do not order based solely on images.

EPL-FL1524-50 Work Light

Listing: United States
Dimensions: 27"-L x 3.25"-Dia
Weight: ~4.75 lb
Voltage: 120-277 Volts 50/60 Hz or 11-25 Volts AC/DC
Total Watts: 26 Watts
Lumens: 3380
Luminous Efficacy :130 Lm/W
Lamp Life: 50,000+ Hours
Lamp Color: 5600K, 5000K, 4500K, 4000K, or 3000K
CRI: >75 White
Power Efficiency: >95%
Power Factor: 0.992
Lamp Length: 2 Foot
Amperage: 0.44 A @ 120 V, 0.22 A @ 240 V, 0.19 A @ 277 V
Ambient Operating Temperature Range: -50°C to +65°C
Operating Temp Rating: T6
Material: Rubber / Copper Free Aluminum
Mounting: Handheld / Aluminum Hook
Wiring: 50' 16/3 AWG SOOW Cable w/ General Area Cord Cap
Cord Cap Options: 5-15, 6-15, 5-20, 6-20, L5-15, L6-15, L5-20, L6-20, BS1363, Schuko, or Pigtail
F.M. Approval: U.S Certificate

Ratings/Approvals

Class I, Division 1 , Groups C and D
Class I, Division 2, Groups A, B, C, D
Class II, Divisions 1 & 2 Groups E, F and G
Class III, Divisions 1 & 2
T6 Temperature Rating
NRTL Certified to UL 844 Ed. 13
NRTL Certified to UL 1598
Certified to C22.2 No. 137 Rev 2014
Certified to C22.2 No. 250.0
Paint Spray Booth Approved
Factory Sealed Light Fixture

Special Orders - Special Requirements

Contact us for special requirements

Toll Free: 1-800-369-6671

Intl: 1-903-270-1187

E-mail: sales@larsonelectronics.com

Made in the USA

The EPL-FL1524-50 from Larson Electronics is a Hazardous Area LED Work Light that is approved for use in Class I Divisions 1 & 2 hazardous locations. With a 26 watt LED tube lamp, this hazardous location light provides better quality light than higher wattage incandescent lights and more light than previous fluorescent lamp equipped models. This light is suitable for exposure to vapors and dusts and ideal for use in paint spray booth inspections or as general portable lighting in confined spaces like fuel tanks or grain storage areas.

This 2 foot long, 26 watt, explosion proof LED work light from Larson Electronics comes complete with a 50 foot long explosion proof cord for convenient operation. This hazardous location area light features a rugged, non-sparking aluminum casing and unique rod cage and produces cool, glare-free, shadowless light that improves safety in hazardous locations and maximizes lighting efficiency with built-in metal reflectors.

These LED lights improve on the desirable qualities of similar fluorescent models with higher output and better light quality and are ideal for paint booth applications, storage container inspections and applications involving confined spaces such as tank cleaning and industrial container maintenance. The high light output, good light color and evenness of coverage makes these lights ideal for a wide variety of close quarter work and inspection activities.

40` Container Dark

Click Photos to Enlarge

Container With EPL-FL1524-LED

The 26-watt LED lamp used in this unit provides as much illumination as higher-wattage incandescent lamps without the associated heat, reducing the chances of accidents or burns. This lamp has no ballast, which reduces lamp weight, an impact resistant tube shield with specially designed annealed glass and an aluminum hook for easy overhead mounting. The 50 foot long Class I, Division 1 rated SOOW 16/3 AWG cord and explosion proof slip-ring housing help this unit to achieve approval for use in environments containing flammable vapors and combustible dusts. This explosion proof LED hand lamp can be used within hazardous locations rated Class I Divisions 1 and 2, and Class II Divisions 1 and 2, making it ideal for hazardous work areas where a ready source of easily managed lighting is desired.

LED Benefits: Unlike gas burning and arc type lamps that have glass bulbs, LEDs have no filaments or fragile housings to break during operation and/or transportation. Instead of heating a small filament or using a combination of gases to produce light, light emitting diodes (LEDs) use semi-conductive materials that illuminate when electric current is applied, providing instant illumination with no warm up or cool down time before re-striking. Because there is no warm up period, this light can be cycled on and off with no reduction in lamp life.

LED lights run at significantly cooler temperatures than traditional metal halide and high pressure sodium lights and contain no harmful gases, vapors, or mercury, making them both safer and more energy efficient. No extra energy is wasted in cooling enclosed work areas due to external heat emissions from bulb type lights, and the operator risks associated with traditional lighting methods, such as accidental burns and exposure to hazardous substances contained in the glass bulbs, are eliminated. In addition, LEDs are also safer for the environment as they are 100% recyclable, which eliminates the need for costly special disposal services required with traditional gas burning and arc type lamps.

Voltage: The drivers in this unit provide the ability to automatically monitor and adjust input current to maintain the correct LED voltage levels regardless of input levels across a specific range. These drop lights can operate on current ranging from 100 to 277 V AC without any modifications necessary as a result. We also offer a low voltage 11-25 V AC/DC version for low voltage applications. This ability to sense and adjust input current also provides protection against voltage spikes and drops that can occur in electrical systems which would otherwise result in burning up or premature LED failure without it.

Click Photos to Enlarge

5-15 Straight Blade Plug
15 Amp / 125 V Rated

L5-15 Twist Lock Plug
15 Amp / 125 V Rated

L6-15 Twist Lock Plug
15 Amp / 250 V Rated

UK BS1363 Straight Blade Plug
13 Amp / 250 V Rated / Internal Fuse

Intl Schuko 2-Pin Plug
16 Amp / 250 V Rated / Grounded

Flying Leads / Pigtail Wires

Wiring/Plug: This explosion proof work light is equipped with 50 feet of 16/3 chemical and abrasion resistant SOOW cord that is fitted with an industrial grade cord cap for easy connection to common wall outlets. Plug options include standard 5-15 15 amp straight blade plug for 110 V wall outlets with ground, standard 5-20 20 amp straight blade plug for 110 V wall outlets with ground, standard 6-15 15 amp straight blade plug for 220-240 V wall outlets with ground, standard 6-20 20 amp straight blade plug for 220-240 V wall outlets with ground, NEMA L5-15 15 amp twist lock plug for 125V twist lock outlets, NEMA L5-20 20 amp twist lock plug for 125 V twist lock outlets, NEMA L6-15 15 amp twist lock plug for 240 V twist lock outlets, NEMA L6-20 20 amp twist lock plug for 240 V twist lock outlets, British BS1363 13 amp fused 3-blade plug for United Kingdom outlets, or a two pin 16 amp rated Schuko plug

with ground contact and socket for European outlets up to 250 V. Alternatively, we can provide flying leads with no plug for hard wire applications or for operators who prefer to wire in user provided cord caps. Please choose pigtail option below for flying leads with no plug.

Please note that the cord cap on this unit is NOT explosion proof and must be connected OUTSIDE the hazardous area.

At Larson Electronics, we do more than meet your lighting needs. We also provide replacement, retrofit, and upgrade parts as well as industrial grade power accessories. Our craftsmen can custom build any lighting system and/or accessories to fit the unique demands of your operation. A commitment to honesty, quality, and dependability has made Larson Electronics a leader in the lighting and electronics business since 1973. Contact us today at 800-369-6671 or message sales@larsonelectronics.com for more information about our custom options tailored to meet your specific industry needs.

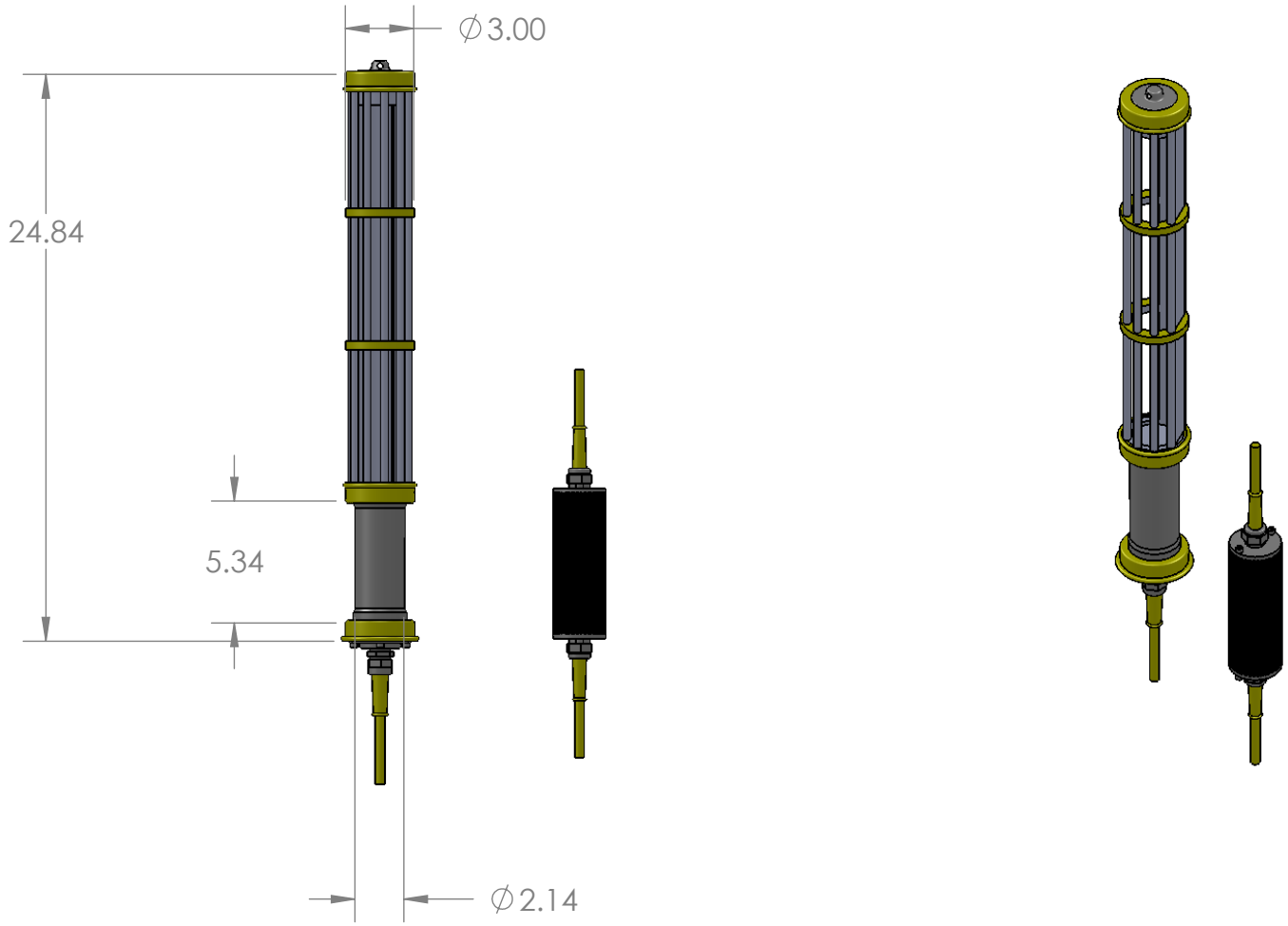

		UNLESS OTHERWISE SPECIFIED:		NAME	DATE
		DIMENSIONS ARE IN INCHES TOLERANCES: FRACTIONAL ± ANGULAR: MACH ± BEND ± TWO PLACE DECIMAL ± THREE PLACE DECIMAL ±	DRAWN		
			CHECKED		
			ENG APPR.		
			MFG APPR.		
		INTERPRET GEOMETRIC TOLERANCING PER:	Q.A.		
		MATERIAL	COMMENTS:		
NEXT ASSY	USED ON	FINISH			
APPLICATION		DO NOT SCALE DRAWING			

PROPRIETARY AND CONFIDENTIAL

THE INFORMATION CONTAINED IN THIS DRAWING IS THE SOLE PROPERTY OF Magnalight.com. ANY REPRODUCTION IN PART OR AS A WHOLE WITHOUT THE WRITTEN PERMISSION IS PROHIBITED.

LarsonElectronics.com

TITLE:

EPL-FL1524

SIZE	DWG. NO.	REV
A	EPL-FL1524	A
SCALE: 1:8	WEIGHT:	SHEET 1 OF 1

5 4 3 2 1

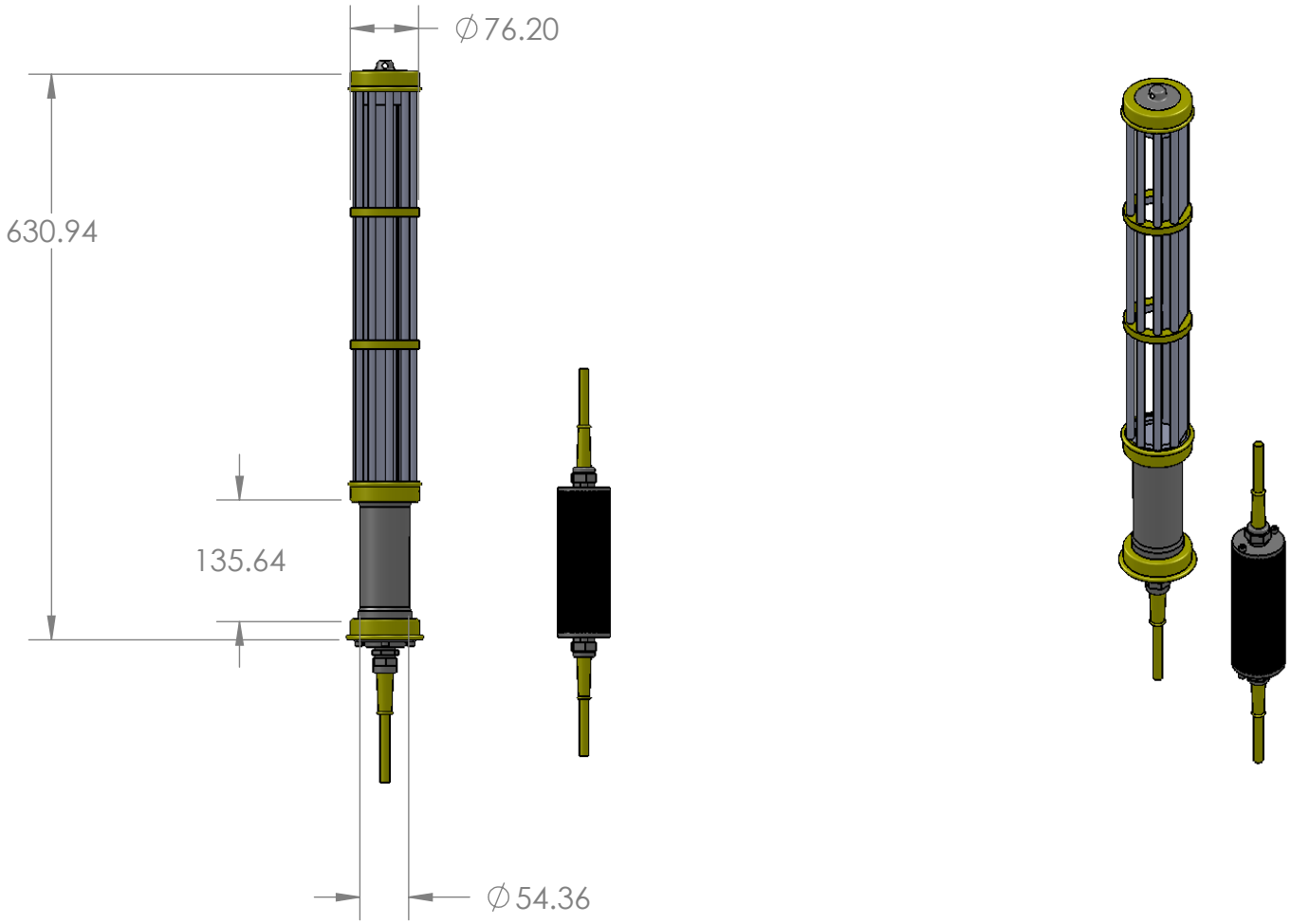

		UNLESS OTHERWISE SPECIFIED:		NAME	DATE
		DIMENSIONS ARE IN INCHES TOLERANCES: FRACTIONAL ± ANGULAR: MACH ± BEND ± TWO PLACE DECIMAL ± THREE PLACE DECIMAL ±	DRAWN		
			CHECKED		
			ENG APPR.		
			MFG APPR.		
		INTERPRET GEOMETRIC TOLERANCING PER:	Q.A.		
		MATERIAL	COMMENTS:		
NEXT ASSY	USED ON	FINISH			
APPLICATION		DO NOT SCALE DRAWING			

PROPRIETARY AND CONFIDENTIAL

THE INFORMATION CONTAINED IN THIS DRAWING IS THE SOLE PROPERTY OF Magnalight.com. ANY REPRODUCTION IN PART OR AS A WHOLE WITHOUT THE WRITTEN PERMISSION IS PROHIBITED.

LarsonElectronics.com

TITLE:

EPL-FL1524

SIZE	DWG. NO.	REV
A	EPL-FL1524	A
SCALE: 1:8	WEIGHT:	SHEET 1 OF 1

5 4 3 2 1

Larson Electronics LLC
9419 E US HWY 175, Kemp, TX 75143
Phone: 800.369.6671

www.LarsonElectronics.com
Email: sales@LarsonElectronics.com
Fax: 903.765.7664

Larson Electronics LLC
9419 E US HWY 175, Kemp, TX 75143
Phone: 800.369.6671

www.LarsonElectronics.com
Email: sales@LarsonElectronics.com
Fax: 903.765.7664

Larson Electronics LLC
9419 E US HWY 175, Kemp, TX 75143
Phone: 800.369.6671

www.LarsonElectronics.com
Email: sales@LarsonElectronics.com
Fax: 903.765.7664

Larson Electronics LLC
9419 E US HWY 175, Kemp, TX 75143
Phone: 800.369.6671

www.LarsonElectronics.com
Email: sales@LarsonElectronics.com
Fax: 903.765.7664

Material Safety Data Sheet

To Whom It May Concern,

The external housing and ballast contained within Larson Electronics LLC EPL, EPLC2, FTL, GAU, GVP, HAL, HALP, HALD, HAL-LI, HALS, HALSS, IND, and WAL industrial line of fluorescent lights without emergency backup for hazardous locations are considered "ARTICLES" under 29 CFR 1910-1200, the OSHA Hazard Communication Standard, and do not require a Material Safety Data Sheet (MSDS). This document does not expire.

Articles are specifically exempt from the regulations of this standard. OSHA defines an article as follows:

1910-1200(c) – Article means a manufactured item other than a fluid or particle:

i. Which is formed to a specific shape or design during manufacture;
ii. Which has end use function(s) dependent in whole or in part upon its shape or design during end use; and
iii. Which under normal conditions does not release more than very small quantities.

The "hazardous location" and "explosion proof" are terminology for the environment where these products will be installed. This is not to be confused with "hazardous materials;" this product does not contain any hazardous materials.

The fluorescent lamp installed within the light fixture requires a Material Safety Data Sheet (MSDS). The MSDS for fluorescent lamps are contained in the following pages. Specific MSDS depends on lamp ordered.

Regards,

Ray Smith

Ray Smith
Larson Electronics, LLC.

LARSON ELECTRONICS LLC • 9419 E US HWY 175 • KEMP, TX 75143
p: 1-800-369-6671 • intl: 903-498-3363 • f: 903-498-3364 • sales@larsonelectronics.com

PHILIPS

Philips Lighting Company

MATERIAL SAFETY DATA SHEET

PRODUCT: ALTO™ Fluorescent T8 U-Bent Lamp (F32 T8/TL 800 Series)

SECTION 1: MANUFACTUERER

Manufacturer's Name and Address: Philips Lighting Company
A Division of Philips Electronics
North America Corporation
200 Franklin Square Drive
P.O. Box 6800
Somerset, NJ 08875

Emergency Telephone Number: (800) 424-9300 CHEMTREC
Other Information Calls: (732) 563-3197 Safety and Compliance

SECTION 2: HAZARDOUS INGREDIENTS

	OSHA (PEL) mg/m^3	ACGIH (TLV) mg/m^3	% by Wt.
Phosphor Powder			
Nuisance Dust	15	10	Approx. 2.5
Cerium Terbium Magnesium Aluminate*	N/A	10	Approx. .25
Barium Magnesium Aluminate*	N/A	1.0	Approx. .5
Yttrium Oxide (1314-36-9)	1.0	1.0	Approx. .5
Antimony*(7440-36-0)	.5	.5	Approx .01%
Manganese*(7439-96-5)	.5	.2	Approx .02%
Mercury (7439-97-6)	.1	.025	< than 20 ppm

*PEL and TLV are given for magnesium, aluminum oxide, yttrium, antimony, and mangenese. Barium aluminate is not a soluble compound. Antimony and Manganese are tightly bound within the crystal matrix of the phosphor (Calcium Phosphate).

SECTION 3: CHEMICAL/PHYSICAL DATA

Not applicable. This item is a light bulb. The bulb is glass, the base is a coated aluminum. The coating is inert.

SECTION 4: FIRE AND EXPLOSION DATA

FIRE AND EXPLOSION DATA NOT APPLICABLE -- under extreme heat, glass envelope might melt or crack.

SECTION 5: REACTIVITY DATA

Stability: Lamp is stable.
Polymerization: Not applicable.
Incompatibility: Glass will react with Hydrofluoric Acid.

SECTION 6: HEALTH HAZARD DATA

Not applicable to the intact lamp. Breakage of the lamp may result in some exposure to the phosphor powder dust and to a very little amount of elemental mercury vapor. No adverse affects are expected from occasional exposure to broken lamps, but as a matter of good practice, prolonged or frequent exposure should be avoided through the use of adequate ventilation during disposal of large quantities of lamps.

EMERGENCY FIRST AID: NORMAL FIRST AID PROCEDURE FOR GLASS CUTS IF SUCH OCCUR THROUGH LAMP BREAKAGE.

SECTION 7: PRECAUTIONS FOR SAFE HANDLING AND USE

Normal precautions should be taken for the collection of broken glass.

Waste Disposal Method: At the end of rated life, when this lamp is removed from service, it will be subjected to the current Toxic Characteristic Leaching Procedure (TCLP) prescribed by the Environmental Protection Agency. This test is used to determining whether an item is a hazardous waste or a non-hazardous waste under current E. P. A. definition. Philips Lighting will provide the test data on request. This result will allow the generator to evaluate all of the disposal options, which may be available in the particular state in which the generator's facility is located. The generator should check with federal, state and local officials for their guidance. In most states ALTO lamps are considered non-hazardous subtitle D waste. Philips encourages recycling of its products by qualified recyclers.

SECTION 8: CONTROL MEASURES

Respiratory Protection: Appropriate dust mask should be used if large quantities of lamps are being broken for disposal.

Ventilation: Avoid inhalation of any airborne dust. Provide local exhaust when disposing of large quantities of lamps.

Hand and Eye Protection: Appropriate hand and eye protection should be worn when disposing of large quantities of lamps or handling broken lamps.

SECTION 9: REGULATORY ISSUES

As a product these mercury containing lamps being shipped in the manufacturer's original packaging are not regulated by air, truck or ocean shipment. As a waste, spent ALTO fluorescent lamps maybe regulated in various states and local communities. This material safety data sheet does not constitute "knowledge of the waste", in certain jurisdictions. TCLP data will be furnished upon request.

SAFETY DATA SHEET

Issuing Date 04-Jan-2016 **Revision Date** 04-Jan-2016 **Revision Number** 3

The supplier identified below generated this SDS using the UL SDS template. UL did not test, certify, or approve the substance described in this SDS, and all information in this SDS was provided by the supplier or was reproduced from publically available regulatory data sources. UL makes no representations or warranties regarding the completeness or accuracy of the information in this SDS and disclaims all liability in connection with the use of this information or the substance described in this SDS. The layout, appearance and format of this SDS is © 2014 UL LLC. All rights reserved.

1. IDENTIFICATION OF THE SUBSTANCE/PREPARATION AND OF THE COMPANY/UNDERTAKING

Product identifier

Product Name **Philips T5 Flourescent Lamps**

Other means of identification

Synonyms None

Recommended use of the chemical and restrictions on use

Recommended Use Lights, Fluorescent

Uses advised against No information available

Details of the supplier of the safety data sheet

Supplier Name Philips Consumer Lifestyle

Supplier Address 1600 Summer St
Stamford
CT
06905
US

Supplier Phone Number Phone:203-351-5000
Fax:888-466-7352
Contact Phone479-464-2829

Supplier Email David.Harris@philips.com

Emergency telephone number

2. HAZARDS IDENTIFICATION

Classification

This chemical is not considered hazardous by the 2012 OSHA Hazard Communication Standard (29 CFR 1910.1200). This product is an article which is a CFL bulb and as such does not require an MSDS per the OSHA hazard communication standard unless ruptured. The hazards indicated are for a ruptured CFL bulb.

Acute toxicity - Oral	Category 4

GHS Label elements, including precautionary statements

Emergency Overview

Signal word **Warning**

Hazard Statements
Harmful if swallowed

This product is an article which contains a chemical substance. Safety information is given for exposure to the article as sold. Intended use of the product should not result in exposure to the chemical substance. This is a CFL bulb. In case of rupture: the above hazards exist.

Appearance White **Physical state** Solid **Odor** Odorless

Precautionary Statements - Prevention
Wash face, hands and any exposed skin thoroughly after handling
Do not eat, drink or smoke when using this product

Precautionary Statements - Response

Ingestion
IF SWALLOWED: Call a POISON CENTER or doctor/physician if you feel unwell
Rinse mouth

Precautionary Statements - Storage
None

Precautionary Statements - Disposal
Dispose of contents/container to an approved waste disposal plant

Hazards not otherwise classified (HNOC)

Not applicable

Unknown Toxicity
96 % of the mixture consists of ingredient(s) of unknown toxicity

Other information

Causes mild skin irritation

Interactions with Other Chemicals
No information available.

3. COMPOSITION/INFORMATION ON INGREDIENTS

.

Chemical name	CAS No	Weight-%	Trade Secret
Bis[2-(diphenylphosphino)phenyl] ether	166330-10-5	1 - 5	*

*The exact percentage (concentration) of composition has been withheld as a trade secret

4. FIRST AID MEASURES

First aid measures

General Advice First aid is upon rupture of sealed CFL bulb.

Eye contact Rinse thoroughly with plenty of water, also under the eyelids. If symptoms persist, call a physician.

Skin contact Wash with soap and water.

Inhalation Remove to fresh air.

Ingestion Do NOT induce vomiting. Rinse mouth immediately and drink plenty of water. Never give anything by mouth to an unconscious person. Call a physician.

Most important symptoms and effects, both acute and delayed

Most Important Symptoms and Effects No information available.

Indication of any immediate medical attention and special treatment needed

Notes to Physician Treat symptomatically.

5. FIRE-FIGHTING MEASURES

Suitable Extinguishing Media
Use extinguishing measures that are appropriate to local circumstances and the surrounding environment.

Unsuitable extinguishing media
CAUTION: Use of water spray when fighting fire may be inefficient.

Specific hazards arising from the chemical
No information available.

Explosion Data
Sensitivity to Mechanical Impact None.

Sensitivity to Static Discharge None.

Protective equipment and precautions for firefighters
As in any fire, wear self-contained breathing apparatus pressure-demand, MSHA/NIOSH (approved or equivalent) and full protective gear.

6. ACCIDENTAL RELEASE MEASURES

Personal precautions, protective equipment and emergency procedures

Personal precautions Avoid contact with skin, eyes or clothing. Use personal protective equipment as required.

Environmental precautions

Environmental precautions See Section 12 for additional Ecological Information.

Methods and material for containment and cleaning up

Methods for containment Prevent further leakage or spillage if safe to do so.

Methods for cleaning up Pick up and transfer to properly labeled containers.

7. HANDLING AND STORAGE

Precautions for safe handling

Handling In case of rupture: Handle in accordance with good industrial hygiene and safety practice. Avoid contact with skin, eyes or clothing. Do not eat, drink or smoke when using this product. Take off contaminated clothing and wash before reuse.

Conditions for safe storage, including any incompatibilities

Storage Keep containers tightly closed in a dry, cool and well-ventilated place. Keep out of the reach of children.

Incompatible Products None known based on information supplied.

8. EXPOSURE CONTROLS/PERSONAL PROTECTION

Control parameters

Exposure Guidelines This product, as supplied, does not contain any hazardous materials with occupational exposure limits established by the region specific regulatory bodies

Appropriate engineering controls

Engineering Measures Showers
Eyewash stations
Ventilation systems

Individual protection measures, such as personal protective equipment

Eye/face protection No special protective equipment required.

Skin and body protection No special protective equipment required.

Respiratory protection If exposure limits are exceeded or irritation is experienced, NIOSH/MSHA approved respiratory protection should be worn. Positive-pressure supplied air respirators may be required for high airborne contaminant concentrations. Respiratory protection must be provided in accordance with current local regulations.

Hygiene Measures Handle in accordance with good industrial hygiene and safety practice.

9. PHYSICAL AND CHEMICAL PROPERTIES

Physical and Chemical Properties

Physical state	Solid		
Appearance	White	**Odor**	Odorless
Color	No information available	**Odor Threshold**	No information available

Property	Values	Remarks Method
pH	No data available	None known
Melting / freezing point	No data available	None known
Boiling point / boiling range	No data available	None known
Flash Point	No data available	None known
Evaporation Rate	No data available	None known
Flammability (solid, gas)	No data available	None known
Flammability Limit in Air		
Upper flammability limit	No data available	
Lower flammability limit	No data available	
Vapor pressure	No data available	None known
Vapor density	No data available	None known
Specific Gravity	No data available	None known
Water Solubility	incompatible	None known
Solubility in other solvents	No data available	None known
Partition coefficient: n-octanol/water	No data available	None known
Autoignition temperature	No data available	None known
Decomposition temperature	No data available	None known
Kinematic viscosity	No data available	None known
Dynamic viscosity	No data available	None known
Explosive properties	No data available	
Oxidizing properties	No data available	

Other Information

Softening Point	No data available
VOC Content (%)	No data available
Particle Size	No data available
Particle Size Distribution	

10. STABILITY AND REACTIVITY

Reactivity

No data available.

Chemical stability
Stable under recommended storage conditions.
Possibility of Hazardous Reactions
None under normal processing.
Conditions to avoid
None known based on information supplied.
Incompatible materials
None known based on information supplied.
Hazardous Decomposition Products
None known based on information supplied.

11. TOXICOLOGICAL INFORMATION

Information on likely routes of exposure

Product Information	Product does not present an acute toxicity hazard based on known or supplied information. In case of rupture:.
Inhalation	Specific test data for the substance or mixture is not available.
Eye contact	Specific test data for the substance or mixture is not available.
Skin contact	Specific test data for the substance or mixture is not available.
Ingestion	Specific test data for the substance or mixture is not available. Harmful if swallowed. (based on components).
Component Information	No information available

Information on toxicological effects

Symptoms	No information available.

Delayed and immediate effects as well as chronic effects from short and long-term exposure

Sensitization	No information available.
Mutagenic Effects	No information available.
Carcinogenicity	Contains no ingredient listed as a carcinogen.
Reproductive toxicity	No information available.
STOT - single exposure	No information available.
STOT - repeated exposure	No information available.
Target Organ Effects	None known.

Aspiration Hazard No information available.

Numerical measures of toxicity Product Information

The following values are calculated based on chapter 3.1 of the GHS document

ATEmix (oral)
500.00 mg/kg

12. ECOLOGICAL INFORMATION

Ecotoxicity
The environmental impact of this product has not been fully investigated.

Persistence and Degradability
No information available.

Bioaccumulation
No information available

Other adverse effects
No information available.

13. DISPOSAL CONSIDERATIONS

Waste treatment methods

Disposal methods This material, as supplied, is a hazardous waste according to federal regulations (40 CFR 261).

Contaminated Packaging Dispose of contents/containers in accordance with local regulations.

US EPA Waste Number D009

California Hazardous Waste Codes M003

14. TRANSPORT INFORMATION

DOT NOT REGULATED
Proper Shipping Name NON REGULATED
Hazard Class N/A

TDG Not regulated

MEX Not regulated

ICAO Not regulated

IATA Not regulated
Proper Shipping Name NON REGULATED
Hazard Class N/A

IMDG/IMO Not regulated
Hazard Class N/A
Marine Pollutant Product is a marine pollutant according to the criteria set by IMDG/IMO This product contains a chemical which is listed as a severe marine pollutant according to IMDG/IMO

RID Not regulated

ADR Not regulated

ADN Not regulated

15. REGULATORY INFORMATION

International Inventories

TSCA Complies
DSL All components are listed either on the DSL or NDSL.

TSCA - United States Toxic Substances Control Act Section 8(b) Inventory
DSL/NDSL - Canadian Domestic Substances List/Non-Domestic Substances List

US Federal Regulations

SARA 313
Section 313 of Title III of the Superfund Amendments and Reauthorization Act of 1986 (SARA). This product does not contain any chemicals which are subject to the reporting requirements of the Act and Title 40 of the Code of Federal Regulations, Part 372

SARA 311/312 Hazard Categories

Acute Health Hazard	No
Chronic Health Hazard	No
Fire Hazard	No
Sudden release of pressure hazard	No
Reactive Hazard	No

CWA (Clean Water Act)
This product does not contain any substances regulated as pollutants pursuant to the Clean Water Act (40 CFR 122.21 and 40 CFR 122.42)

CERCLA
This material, as supplied, does not contain any substances regulated as hazardous substances under the Comprehensive Environmental Response Compensation and Liability Act (CERCLA) (40 CFR 302) or the Superfund Amendments and Reauthorization Act (SARA) (40 CFR 355). There may be specific reporting requirements at the local, regional, or state level pertaining to releases of this material

US State Regulations

California Proposition 65
This product contains the following Proposition 65 chemicals.

Chemical name	California Proposition 65
Mercury - 7439-97-6	Developmental

U.S. State Right-to-Know Regulations

.

Chemical name	New Jersey	Massachusetts	Pennsylvania	Rhode Island	Illinois
Mercury 7439-97-6	X	X	X	X	X

International Regulations

Canada
WHMIS Hazard Class
Non-controlled

16. OTHER INFORMATION

NFPA	**Health Hazards** 1	**Flammability** 0	**Instability** 0	**Physical and Chemical Hazards** -
HMIS	**Health Hazards** 0	**Flammability** 0	**Physical Hazard** 0	**Personal Protection** X

Prepared By	Product Stewardship 23 British American Blvd. Latham, NY 12110 1-800-572-6501
Issuing Date	04-Jan-2016
Revision Date	04-Jan-2016
Revision Note	No information available

Disclaimer
The information provided in this Safety Data Sheet is correct to the best of our knowledge, information and belief at the date of its publication. The information given is designed only as a guidance for safe handling, use, processing, storage, transportation, disposal and release and is not to be considered a warranty or quality specification. The information relates only to the specific material designated and may not be valid for such material used in combination with any other materials or in any process, unless specified in the text

End of Safety Data Sheet

PHILIPS

Philips Lighting Company

MATERIAL SAFETY DATA SHEET

PRODUCT: T-5 Silhouette Standard and HO

Revised: 8/02

SECTION 1: MANUFACTURER

Manufacturer's Name and Address: Philips Lighting Company
A Division of Philips Electronics
North America Corporation
200 Franklin Square Drive
PO Box 6800
Somerset, NJ 08875

Emergency Telephone Number: (800) 424-9300 CHEMTREC
(732) 563-3197 Safety and Compliance
Other Information Calls: (732) 563-3089

SECTION 2: HAZARDOUS INGREDIENTS

	OSHA PEL	ACGIH	PERCENTAGE
Phosphor Powder			
Nuisance dust	15 mg/m3	10mg/m3	approx. 2.5%
Yttrium Oxide: Europium (68585-82-0)	1mg/m3	1mg/m3	approx. .8%
Barium Carbonate (0513-77-9)	0.5mg/m3	0.5mg/m3	approx. .3%
Manganese Carbonate (598-62-9)	5.0mg/m3	5.0 mg/m3	approx. .3%
Aluminum Oxide (1344-28-1)	15 mg/m3	10 mg/m3	approx. .3%
Cerium Oxide			approx. .2%
Gadolinium Oxide			approx. .2%
Terbium Oxide (12036-41-8)			approx. .2%
Magnesium Oxide (1309-48-4)	15mg/m3	10mg/3	approx. .2%
Boric Oxide (1303-86-2)	10mg/m3	10mg/m3	approx. .2%
Mercury (7439-97-6)	.1mg/m3	.025mg/m3	less than .01%

These materials are essentially ceramic phosphors (except for the mercury). The ceramics are Barium Aluminate<Yttrium Oxide and a Cerium Terbium Borate mixture. The PELs and TLV are given where available for the base components. There is no data on the ceramic mixtures as mixtures.

SECTION 3: PHYSICAL CHEMICAL CHARACTERISTICS

Not applicable. These items are light bulbs with 5/8 inch diameter and various lengths up to a nominal five feet (lengths are actually metric).

SECTION 4: FIRE AND EXPLOSION DATA

Fire and explosion data not applicable. Under extreme heat glass envelope might melt or crack.

SECTION 5: REACTIVITY DATA

Stability:	Lamp is stable
Incompatibility:	Glass will react with Hydrofluoric Acid
Polymerization:	Not applicable

SECTION 6: HEALTH EFFECTS

Not applicable for the intact lamp. Breakage of the lamp may result in some exposure to the phosphor powder dust/and to elemental mercury vapor. No adverse affects are expected from occasional exposure to broken lamps, but as a matter of good practice, prolonged or frequent exposure should be avoided through the use of adequate ventilation during disposal of large quantities of lamps.

Emergency and First Aid Procedure: Normal first aid procedure for glass cuts if such occur through lamp breakage.

SECTION 7: PRECAUTIONS FOR SAFE HANDLING AND USE

Normal precautions should be taken for the collection of broken glass.

Waste Disposal Method: At the end of rated life, when this lamp is removed from service, it will be subjected to the current Toxic Characteristic Leaching Procedure (TCLP) prescribed by the Environmental Protection Agency. This test is used to determining whether an item is a hazardous waste or a non-hazardous waste under current E. P. A. definition. These lamps would fail the TCLP test and would be considered hazardous under the Universal Waste Rules. Generators should evaluate all of the disposal options, which may be available in the particular state in which the generator's facility is located. The generator should check with federal, state and local officials for their guidance. Philips encourages recycling of its products by qualified recyclers.

SECTION 8: CONTROL MEASURES

Respiratory Protection: None. NIOSH-approved respirator might be used if large volumes of lamps are being broken for disposal.

Ventilation: Avoid inhalation of any airborne dust.
Provide local exhaust when disposing large quantities of lamps.

Hand and Eye Protection: Appropriate hand and eye protection should be worn when disposing of lamps or handling broken glass.

SECTION 9: REGULATORY INFORMATION

As a product these mercury containing lamps being shipped in the manufacturer's original packaging are not regulated by air, truck or ocean shipment. As a waste, these spent fluorescent lamps would be regulated in various states and local communities. This material safety data sheet does not constitute "knowledge of the waste", in certain jurisdictions.

PHILIPS

Philips Lighting Company

Lamp Material Data Sheet (LMDS)

LMDS #: TL12-13100A
Date: 12/31/2015

Product: Philips T12 Fluorescent Lamps – All Types
All ALTO, non-ALTO, Standard, HO, Circular, U-Bent and TuffGuard
All lengths, coatings, wattages

Section 1. **Manufacturer and Contact Information**

Philips Lighting North America Corporation
200 Franklin Square Drive
Somerset, NJ 08873-4186

24 HR Emergency Phone Number: (800) 424-9300 CHEMTREC
Other Information Calls: (800) 555-0050 Philips Lighting Technical Information

Section 2. **Hazardous Ingredients/Identity Information**

These lamps contain the following materials:

Material	(CAS #)	Exposure Limits OSHA PEL mg/m^3	ACGIH TLV mg/m^3	PERCENTAGE by weight
Glass	(65997-17-3)	15	10	~96.0%
Phosphor Powder As Nuisance Dust		15	10	~2.5%
Mercury	(7439-97-6)	0.1	0.025	~0.01%
Polyethylene Terephthalate (PET)	(25038-59-9)	-	-	~3.0%

Phosphor powders are ceramic phosphors. There is no data for the ceramics as mixtures. PET sleeving is applied to TuffGuard versions of the lamps to retain materials in the event of lamp breakage.

Section 3. **Physical Properties**

Not applicable to an intact lamp. These items are light bulbs 1 1/2 inch in diameter and range from 12 to 96 inches in length.

Section 4. **Fire and Explosion Hazards**

Not applicable to an intact lamp. If subjected to extreme heat, the glass, and plastic (if present), components of the lamp may crack or melt and may emit toxic fumes. Use extinguishing media appropriate for combustibles in the area.

Section 5. **Reactivity**

Not applicable to an intact lamp.

Section 6. **Health Hazards**

Not applicable to an intact lamp. Breakage of the lamp may result in some exposure to the phosphor powder and to elemental mercury. No adverse effects are expected from occasional exposure to broken lamps, but as a matter of good practice, prolonged exposure should be avoided through the use of adequate ventilation during the disposal of large quantities of lamps.

Guidance on cleaning up a broken lamp can be obtained from http://www2.epa.gov/cfl/cleaning-broken-cfl.

Emergency and First Aid Procedures: Apply normal first aid for glass cuts if such should occur through lamp breakage.

Section 7. **Lamp Disposal Procedures**

Normal precautions should be taken for the collection of glass particles in the event a lamp is broken.

Waste Disposal Method: All fluorescent lamps contain some amount of mercury. When a fluorescent lamp is to be disposed, it is subject to the current EPA Toxicity Characteristic Leaching Procedure (TCLP) disposal criteria. This test is used to determine if an item can be managed as hazardous or non-hazardous waste.

Philips low-mercury ALTO fluorescent lamps are identifiable by their characteristic green end caps. Philips ALTO lamps are TCLP compliant and can be managed as non-hazardous waste. Philips will provide TCLP test data upon request.

Philips non-ALTO lamps (with silver end caps) are not TCLP compliant and should be managed as a hazardous waste under the EPA Universal Waste Rules for fluorescent lamps.

All disposal options should be evaluated with respect to federal, state, and local requirements. Before disposing of waste lamps, check with federal, state, and/or local officials for current guidelines and regulations. Philips encourages recycling of its products through qualified recycling facilities.

Section 8. **Control Measures**

Respiratory Protection: None. NIOSH-approved respirator should be used if large quantities of lamps are being broken for disposal.
Ventilation: Avoid inhalation of any airborne dust. Provide local exhaust when disposing of large quantities of lamps.
Hand and Eye Protection: Appropriate hand and eye protection should be worn when disposing of lamps and/or handling broken glass.

Section 9. **Regulatory Information**

As a product, these mercury-containing lamps, when shipped in the manufacturer's original packaging, are not regulated by air, truck, or ocean shipment. As a waste, these lamps may be regulated in various states and local communities. This safety data sheet does not constitute "knowledge of the waste" in certain jurisdictions.

This document supercedes previous document: LMDS TL12-13100 issued 07/10/2013

Occupational Health and Safety Administration (OSHA) Material Safety Data Sheet (MSDS) requirements for materials are not applicable to manufactured articles in which individuals would not be subjected to materials contained in the article during its normally intended use. The information in this document is provided as a courtesy and is intended to provide relevant information in the event the articles it covers are encountered during unintended, or abnormal, circumstances.

Larson Electronics LLC
9419 E US HWY 175, Kemp, TX 75143
Phone: 800.369.6671

www.LarsonElectronics.com
Email: sales@LarsonElectronics.com
Fax: 903.765.7664

Frequently Asked Questions (FAQ)

There are no Faqs