Larson Electronics LLC
9419 E US HWY 175, Kemp, TX 75143
Phone: 800.369.6671

www.LarsonElectronics.com
Email: sales@LarsonElectronics.com
Fax: 903.765.7664

MPD-DS-FM-NFDS-3P-4W-34.5KV-2000A-DF-BM-N3R-GO-VB

MV Disconnect Switch, 2000 Amp, 34.5KV 3PH AC, 3-Pole 4-Wire, Floor Mount, NEMA 3R, Group-operated, Vertical Break Air Switch

Product ID: 346506



Image: MPD-DS-FM-NFDS-3P-4W-34.5KV-2000A-DF-BM-N3R-GO-VB

Larson Electronics LLC manufactures a wide variety of products, including custom built to spec designs. The pictures displayed for this unit are a general representation of form factor for the product line and may not accurately represent this exact configuration in every detail due to custom builds and changes between similar products in our standard catalog. The specifics for this configuration are listed in the specification table and supporting documentation (CAD files, Dimensional Drawing, Name Plate Diagram, Wiring Diagram, etc.). This means that specific details (receptacles, plugs, wires, connections, mounting brackets, external finishes, etc.) may not be accurately represented in images vs specifications. Please review specifications and do not order based solely on images.

MPD-DS-FM-NFDS-3P-4W-34.5KV-2000A-DF-BM-N3R-GO-VB - Disconnect Switch - Non-Fused Disconnect
Unit Type: Service Entrance Non-Fused Air Disconnect Switch, Vertical Break
Line-In: N/A (customer provided)
Line-In Cord Cap: N/A (customer provided)
Line-In Connections: Terminal Lugs, Accepts 750MCM-1/0
Line-In Orientation: Bottom Feed
Nominal Voltage: 34.5KV AC Delta or Wye
Rated Votage: 35KV
Phase: 3-Phase
Configuration: 3-Pole, 4-Wire
Frequency (Hz): 60 Hz (60-Cycles)
Insulators Per Pole: 3
Protection Method:
Protection Type:
Protection Fuses:
Protection Ampacity: 2000A
Mains Rating (Amps): 2000A
Interrupting Rating: 200 kA @ 34.5 KV AC
Disconnect Means: Manual via Handle
Operating Mechanism: Adjustable open/close stops, Padlock-able in both open and closed positions, Equipped with: 1½" IPS vertical pipe, Minimum 1" IPS interphase pipe, Clamp-on open/close indicators (Green: Open; Red: Closed)
Motor Operation Provisions: N/A

Ratings

NRTL Listed Service Equipment
NRTL Listed to UL 891 Dead Front Switch Boards
NEMA 3R Rated for Indoor and Outdoor Use
Complies with ANSI C37.30
Complies with ANSI C37.32
Complies with ANSI C37.34
Complies with NEMA SG-6
Made in the USA

Features

Corona-free design
Arc horns included
High-strength insulators
RIV levels must match insulator ratings (open/closed positions)

Neutral Connection: Insulated Groundable Neutral Kit with Bonding Strap
Ground Fault Protection: N/a
Line-Out: N/A (customer provided)
Line-Out Cord Cap: N/A (customer provided)
Line-Out Connection: Terminal Lugs, Accepts 750MCM-1/0
Line-Out Orientation: Bottom Feed
Form Factor: Rectangular, Slim-profile Enclosure w/ Lockable Door
Live Parts Material: Hard drawn or extruded (preferred); castings x-ray certified free of porosity/cracks
Bearings: Ball Type, (maintenance-free, permanently lubricated), Factory-adjusted, Water/dust ingress protected, Outboard bearings small contact area, wear-resistant
Terminal Pads: Ductile, high-conductivity material, machined top and bottom, NEMA 4-hole pattern
Contacts: Reverse loop design for magnetic short-circuit pressure boost, Silver-to-silver contact surface (≥1 mil) plating, Stainless steel coil spring-backed, insulated from current path, Wiping action on hinge/break-jaw; shunts not allowed, Rotary motion stop ensures consistent pressure regardless of operating speed
Mounting Height:: Base height matched to 18 ft bus height
Door: (1) Left Hinged Door w/ Pad Lockable Handle
Enclosure Material: 11GA Sheet Steel
Enclosure Finish: ANSI 49 Grey
Enclosure Type: NEMA 3R Ventilated
Dimensions: 59.1 in L x 39.4 in W x 90.55 in H (estimated)
Weight: 4000 lbs (estimated)
Shipping Dimensions: TBD
Shipping Weight: TBD
***Note**: To close the contact, prime the switch first with the lever and then push the button. To open the contact, push the button. It requires a minimum of 600V AC.*

Special Orders - Special Requirements
Contact us for special requirements
Toll Free: 1-800-369-6671
Intl: 1-903-270-1187
Fax: 1-903-765-7664
E-mail: sales@larsonelectronics.com

Larson Electronics manufactures a wide variety of custom power distribution systems. The pictures displayed for this unit are a general representation of form factor and may not accurately represent this exact configuration in every detail due to being custom builds. The specifics for this configuration are listed in the specification table and one-line diagram.

All grounding shall comply with state and local codes and meet the minimum requirements of the National Electronic Code section 250

Made in the USA

The Larson Electronics MPD-DS-FM-NFDS-3P-4W-34.5KV-2000A-DF-BM-N3R-GO-VB Power Distribution Air Disconnect Switch is designed for reliable, safe and convenient power distribution at industrial work sites. Designed for floor mounting installations, the bottom feed disconnect switch is protected by a NEMA 3R rated, steel enclosure with a ventilated design.

PLEASE NOTE: ANY FREE SHIPPING OFFERS DO NOT APPLY TO POWER DISTRIBUTION PANELS, TRANSFORMERS, OR SUBSTATIONS

The **MPD-DS-FM-NFDS-3P-4W-34.5KV-2000A-DF-BM-N3R-GO-VB** service entrance disconnect switch provides a safe and reliable way for operators in industrial settings to tap into and utilize power sources independently of the work area. Compatible with three-phase 35 KV AC Delta or Wye, the disconnect switch features a manual operating handle. This bottom feed disconnect carries a 200 kA at 34.5 KV AC interrupt rating. The disconnect switch comes with and accepts three 2000-amp 35 KV ratings. An insulated groundable neutral kit with bond strap is included for neutral connections.

Operation: The dead front disconnect switch features a locking door. The door provides access to a permanently attached operating handle, which is used for manually disconnecting or connecting power.

Enclosure Design: The disconnect switch is protected by an 11GA sheet steel enclosure with ANSI 49 grey finish. A ventilated design promotes natural cooling and improves performance. The enclosure is NEMA 3R rated for protection against water, moisture and debris. This rating allows the fused disconnect to be used in indoor and outdoor areas.

Certification: This disconnect switch is NRTL listed to UL 891 dead front switchboards and NRTL listed for service equipment.

Mount: Operators can mount the service entrance disconnect on floors and flat surfaces.

Customization: The MPD-DS-FM-NFDS-3P-4W-34.5KV-2000A-DF-BM-N3R-GO-VB can be customized to meet specific operating and power requirements. Example of customizations include:

• Making the disconnect portable and certified to NRTL UL 1640 for portable equipment

• Adding single-pole camlock connectors for quick connections

• Adding heaters for cold environments

• Aiding alarm relays for trip notification downstream

• Adding power meters

Applications: This switch is suitable for indoor/outdoor use and applications including, but not limited to, construction sites, plant maintenance, plant turnarounds, hazardous location operations, shows, exhibits, and shipyard operations.

At Larson Electronics, we do more than meet your lighting needs. We also provide replacement, retrofit, and upgrade parts as well as industrial grade power accessories. Our craftsmen can custom build any lighting system and/or accessories to fit the unique demands of your operation. A commitment to honesty, quality, and dependability has made Larson Electronics a leader in the lighting and electronics business since 1973. Contact us today at 800-369-6671 or message sales@larsonelectronics.com for more information about our custom options tailored to meet your specific industry needs.

REV	DESCRIPTION	DATE
A	PRODUCT DESCRIPTION	11.13.2026

MPD-DS-FM-NFDS-3P-4W-34.5KV-2000A-DF-BM-N3R-GO-VB

LARSON ELECTRONICS®

SKU: MPD-DS-FM-NFDS-3P-4W-34.5KV-2000A-DF-BM-N3R-GO-VB

Unit Details: MV Disconnect Switch, 2000 Amp, 34.5KV 3PH AC, 3-Pole 4-Wire, Floor Mount, NEMA 3R, Group-operated, Vertical Break Air Switch

FRONT VIEW

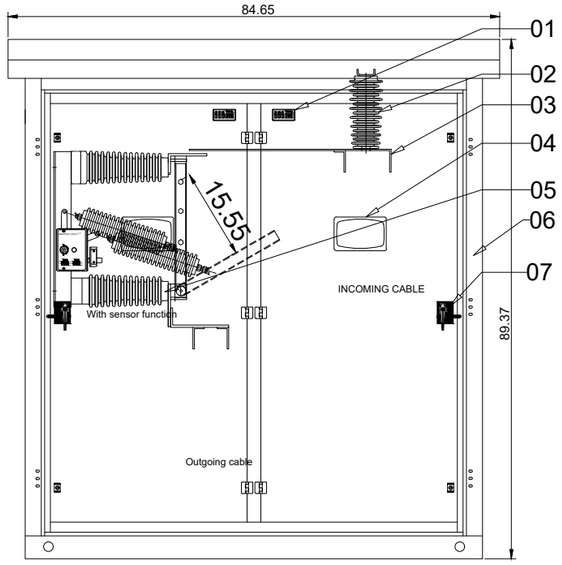

SIDE VIEW

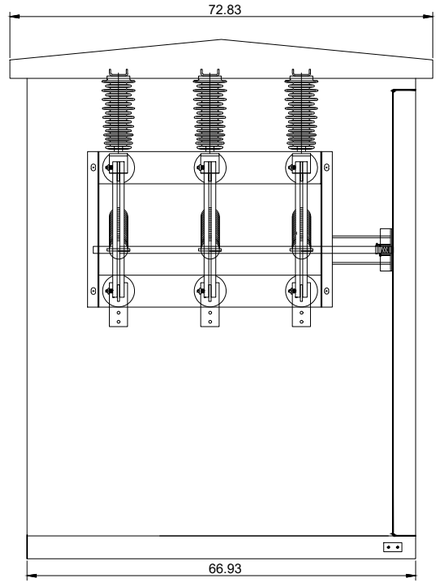

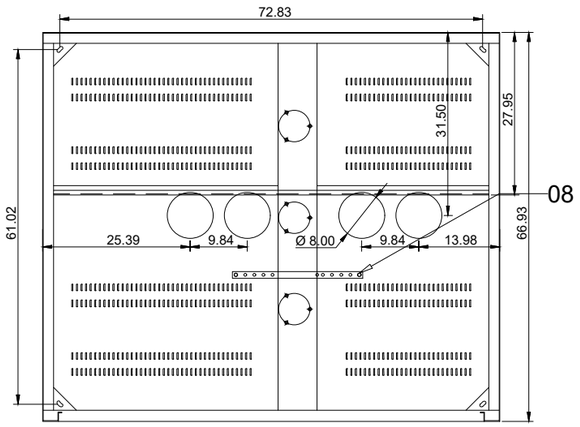

BOTTOM VIEW

Specification	Value
Equipment Type	Non-Fused Gang Operated Air Break Disconnect Switch, Service Entrance (single enclosure with line-in and line-out)
Rated Voltage	34.5 kV nominal (35 kV rated)
Continuous Current Rating	2000 A
Phase / Wire Configuration	3-Ph, 4-Wire (insulated groundable neutral kit with bonding strap)
Switch Operation	Gang Operated, Manual via Handle, padlockable in open and closed positions. Motor operation provisions: N/A.
Control Voltage	N/A
Mounting	Floor Mount
Break Type	Vertical-Break Air Disconnect, with open/close indicators
Enclosure	NEMA 3R, Ventilated, 11GA Sheet Steel, ANSI 49 Grey
Cable Entry	Bottom Feed in and out, terminal lugs accept 750MCM–1/0

MANUAL DISCONNECT SWITCH

Switch by Larson Electronics

LARSON ELECTRONICS
9419 E US HWY 175,
KEMP, TX 75143

TITLE		
MPD-DS-FM-NFDS-3P-4W-34.5KV -2000A-DF-BM-N3R-GO-VB		
DRAWN BY: JMD	DATE: 11.13.2026	REV: A
CHECKED BY: RR	SHEET #: 1 OF 1	DRAWING #: 101

SKU: MPD-DS-FM-NFDS-3P-4W-34.5KV-2000A-DF-BM-N3R-GO-VB

Unit Details: MV Disconnect Switch, 2000 Amp, 34.5KV 3PH AC, 3-Pole 4-Wire, Floor Mount, NEMA 3R, Group-operated, Vertical Break Air Switch

FRONT VIEW

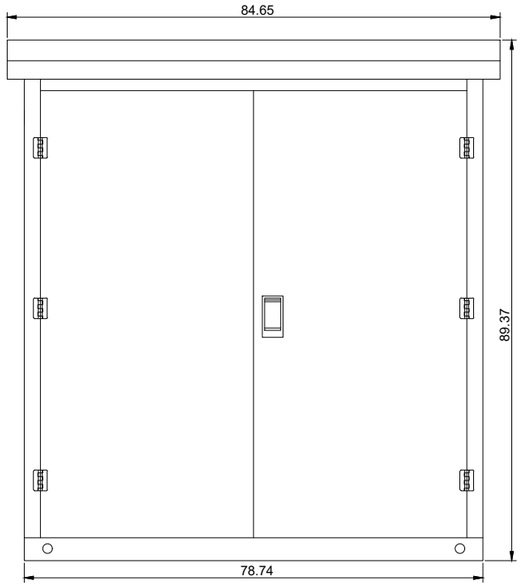

SIDE VIEW

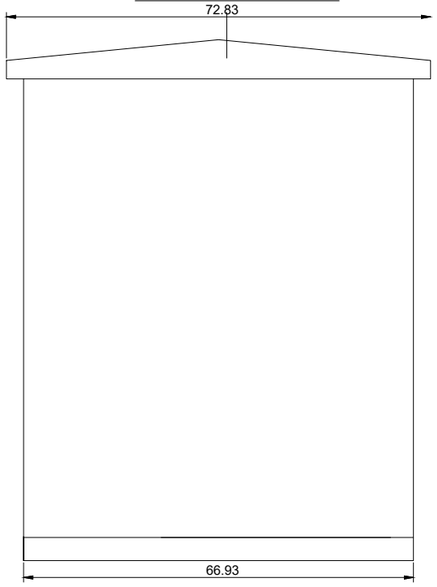

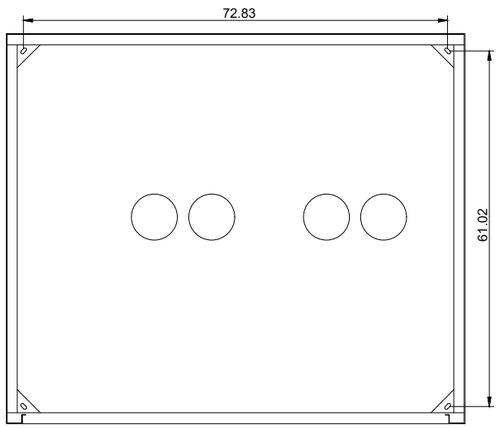

BOTTOM VIEW

MANUAL DISCONNECT SWITCH

Switch by Larson Electronics

LARSON ELECTRONICS	TITLE: MPD-DS-FM-NFDS-3P-4W-34.5KV -2000A-DF-BM-N3R-GO-VB		
	DRAWN BY: JMD	DATE: 11.13.2026	REV: A
9419 E US HWY 175, KEMP, TX 75143	CHECKED BY: RR	SHEET #: 1 OF 1	DRAWING #: 101

Larson Electronics LLC
9419 E US HWY 175, Kemp, TX 75143
Phone: 800.369.6671

www.LarsonElectronics.com
Email: sales@LarsonElectronics.com
Fax: 903.765.7664



Larson Electronics LLC
9419 E US HWY 175, Kemp, TX 75143
Phone: 800.369.6671

www.LarsonElectronics.com
Email: sales@LarsonElectronics.com
Fax: 903.765.7664



Larson Electronics LLC
9419 E US HWY 175, Kemp, TX 75143
Phone: 800.369.6671

www.LarsonElectronics.com
Email: sales@LarsonElectronics.com
Fax: 903.765.7664



Larson Electronics LLC
9419 E US HWY 175, Kemp, TX 75143
Phone: 800.369.6671

www.LarsonElectronics.com
Email: sales@LarsonElectronics.com
Fax: 903.765.7664



Larson Electronics LLC
9419 E US HWY 175, Kemp, TX 75143
Phone: 800.369.6671

www.LarsonElectronics.com
Email: sales@LarsonElectronics.com
Fax: 903.765.7664

Frequently Asked Questions (FAQ)

There are no Faqs