Larson Electronics LLC
9419 E US HWY 175, Kemp, TX 75143
Phone: 800.369.6671

www.LarsonElectronics.com
Email: sales@LarsonElectronics.com
Fax: 903.765.7664

MPD-EMC-R7-3P-DMR-15KV-YT-200.5CT-N3R-M3

15 kV Electrical Metering Cabinet, Combination CT/PT, 3-Phase, Dry Type – ACUVIM IIR Power & Energy Meter – Pad Mount, Outdoor Service

Product ID: 345189



Image: MPD-EMC-R7-3P-DMR-15KV-YT-200.5CT-N3R-M3

Larson Electronics LLC manufactures a wide variety of products, including custom built to spec designs. The pictures displayed for this unit are a general representation of form factor for the product line and may not accurately represent this exact configuration in every detail due to custom builds and changes between similar products in our standard catalog. The specifics for this configuration are listed in the specification table and supporting documentation (CAD files, Dimensional Drawing, Name Plate Diagram, Wiring Diagram, etc.). This means that specific details (receptacles, plugs, wires, connections, mounting brackets, external finishes, etc.) may not be accurately represented in images vs specifications. Please review specifications and do not order based solely on images.

MPD-EMC-R7-3P-DMR-15KV-YT-200.5CT-N3R-M2 Electrical Metering Cabinet Combinations (CT/PT)
Unit Type: Electrical Metering Cabinet (EMC)
Unit Configuration: Combinations Current & Voltage Transformer (CT/PT), Dry Type
Rated Frequency: 60 Hz

Phase: Three Phase, 3 Wire

Metering Device: ACUVIM-IIR-D-5A-P1V3 Series Advanced Power & Energy Meter | ANSI C12.20 Class 0.15 Accuracy, AXM WEB2 FOLC device for Modbus-TCP capability
Meter Functions: Voltage, Current, Power, Energy, Frequency, Power Factor, Harmonics Monitoring

CT Specifications:
Type: Split Core, Revenue Grade, Outdoor Rated
Quantity: (3)
Rated Voltage: 15 kV
Current Ratio: 200:5
CT Accuracy Class: 0.15S

Secondary Terminals:
- Provided with a manual shorting device
- Suitable for terminating #14 through #4 AWG copper conductors
- Sealable protective cover provided

PT Specifications:
Type: Revenue Grade, Outdoor Rated

Ratings

Complies with ANSI / IEEE C57.13
Complies with ANSI / IEEE C57.13.6
Meets/Exceeds IEEE C57.12.28
Meets IEEE 386 for 200A separable load-break connectors

Quantity: (3)
Primary Voltage: 12,470V Delta (L-L)
Primary Voltage Class: 15 KV
Secondary Voltage: 120V
Voltage Ratio: 60:1
PT Accuracy Class: 0.15

BIL: 110 kV BIL
Main Bus Rating: 600A continuous
Bus Bracing: 20 kA symmetrical / 28 kA asymmetrical
Bus Material: Copper
Jumpers: Fused jumpers from main bus to CTs and VTs, Insulated for 15 kV
Dead-Front Terminations: 200A Separable Load-Break Bushings
Dead-Front Bushings Per Phase: One (1) 200A Load-Break Bushing Well
Radial Feed: One (1) 200A load-break connection per phase
Test Switch Type: 10-pole, reversed potentials, ST terminals, Lexan cover
Test Switch Location: Right interior wall of CT/PT compartment
CT Wiring: #10 AWG solid copper
VT Wiring: #12 AWG solid copper
Color Coding: VA Orange, VB Blue, VC Yellow, VN White, CT-A Black, CT-B Brown, CT-C Red, CTR Gray
Terminal Order: VA, VB, VC, VN, CTR-A, CT-A, CTR-B, CT-B, CTR-C, CT-C
Meter Socket: External mounting provision per EUSERC 339
Continuous Thermal Current Rating Limit Factor (rf): 1.25
Dead-Front Bushings Per Phase: (1) 200A Load-Break Bushing Well
Minimum clearances measured from live part to bare metal:
- Phase-to-Ground: 6.0 inches minimum
- Phase-to-Phase: 7.5 inches minimum
Additional stationary barriers provided to allow reduced clearance of 3.0 inches from barrier to live parts.
Meter Socket: External mounting provision per EUSERC 339
Metering Device: ACUVIM II Series Advanced Power & Energy Meter
Meter Display: Backlit LCD multifunction display
Meter Communication Ports: RS-485 / Ethernet
Metering Parameters: kW, kVAR, kVA, PF, Voltage, Current, Frequency, kWh, THD
Grounding Bosses: Four (4) total, 1/2-13NC tapped holes, 7/16" deep, two per compartment; accepts #6 solid to #2/0 stranded copper.
Compartment Layout: Separate CT/PT and cable termination compartments, located on opposite sides of enclosure.
Phase To Ground Compartment Barriers: Red Reinforced Polyester
Fault Venting: Tamper-proof stainless screened vents rated for 10kA, 15 cycles.
Winding Material: Copper
Service Condition: Outdoor
Roof: Domed or sloped to prevent standing water
Base: Sealed bottom to prevent access to animals and foliage, Screened drain vents provided for drainage in case of flooding
Altitude: N/A
Ambient Temperature Rating: N/A
Door Safety: Internal door safety barrier
Hardware Materials: Stainless Steel
Terminator Parking Stands: Welded stainless steel, quantity suitable for number of bushings provided
Enclosure Class: NEMA 3R Weatherproof, Aluminum
Nameplate Materials: Corrosion Resistant Stainless Steel w/ Stainless Steel Screws or Rivets For CT & VT
Markings: Manufacturer Name, Manufacturer Serial Number, Nominal Operating Voltage, Rated Current, BIL, Equipment Manufacture Date, One-line diagram showing CT and PT ratios
Paint Color: Munsell™ 7GY 3.29/1.5 Bell Green
Mounting Provisions: Pad Mount
Lifting Provisions: Included
Spare Parts: three (3) spare primary fuses for the PTs.
Dimensions: 51.18"-W x 47.24"-D x 51.18"-H

Special Orders- Requirements
Contact us for special requirements
Toll Free: 1-800-369-6671
Intl: 1-903-270-1187
Fax: 1-903-765-7664

Weight: 661.4 lbs
Warranty: Failure of any component due to defective design, material, or workmanship within 12 months of energization or 18 months from delivery, whichever occurs first, shall be repaired or replaced at no cost.

E-mail: sales@larsonelectronics.com

The MPD-EMC-R7-3P-DMR-15KV-YT-200.5CT-N3R-M3 Electrical Metering Cabinet from Larson Electronics is designed for utility-grade power monitoring and metering applications in outdoor and industrial locations. This heavy-duty EMC integrates combination current transformers (CTs), voltage transformers (PTs), and an ACUVIM II Series advanced power and energy meter for accurate electrical system monitoring, energy measurement, and power quality analysis. The cabinet is compatible with medium voltage power distribution systems and pad mounting installations.

PLEASE NOTE: ANY FREE SHIPPING OFFERS DO NOT APPLY TO POWER DISTRIBUTION PANELS, TRANSFORMERS, OR SUBSTATIONS*

Cabinet Features: The MPD-EMC-R7-3P-DMR-15KV-YT-200.5CT-N3R-M3 is rated for 15 kV, 60 Hz, three-phase operation. The system features dry-type CT/PT construction with copper buswork and dead-front separable load-break terminations. The integrated ACUVIM II Series Power & Energy Meter provides multifunction monitoring of voltage, current, power, energy consumption, frequency, power factor, demand, and harmonic distortion parameters with revenue-grade accuracy.

Metering System: The ACUVIM II Series advanced multifunction meter supports real-time monitoring and data acquisition for utility and industrial applications. The metering device offers Ethernet and RS-485 communication capabilities with support for Modbus RTU/TCP protocols for integration into SCADA, BMS, and remote monitoring systems.

Insulation System: The MPD-EMC-R7-3P-DMR-15KV-YT-200.5CT-N3R-M3 utilizes dry-type insulated CT/PT components for reliable medium voltage metering applications. The system is engineered for low maintenance operation and long service life in demanding outdoor environments.

Primary Connections: The cabinet features 200A separable load-break bushings and fused jumpers insulated for 15 kV service. The primary conducting surfaces are designed for reliable medium voltage operation with high mechanical and thermal strength.

Secondary Connections: The CT/PT assembly provides accessible terminal blocks and test switch provisions for simplified testing and maintenance procedures. Secondary wiring utilizes solid copper conductors with industry-standard color coding for accurate field identification and installation.

Mount: The MPD-EMC-R7-3P-DMR-15KV-YT-200.5CT-N3R-M3 is pad mounted and constructed with a NEMA 3R weatherproof aluminum enclosure suitable for outdoor service conditions.

Benefits: The MPD-EMC-R7-3P-DMR-15KV-YT-200.5CT-N3R-M3 Electrical Metering Cabinet provides accurate revenue-grade electrical monitoring for utilities, substations, industrial facilities, and power distribution systems. The integrated ACUVIM II metering platform enables improved energy management, power quality analysis, system diagnostics,

and reduced operational costs through advanced monitoring capabilities.

Applications: Utility metering, electrical substations, medium voltage distribution systems, industrial power monitoring, power quality analysis, SCADA integration, energy management systems, utility power generation, power grids, and high voltage system control applications.

Larson Electronics is a manufacturer and as such can build stationary and portable transformer systems to your specifications. Although we carry several models of power distribution transformer systems, we can deliver custom ordered units almost as quickly as our prebuilt units. If this model does not meet your needs, please contact us at 1-800-369-6671 or sales@larsonelectronics.com to discuss your specific requirements.

RIGHT SIDE VIEW

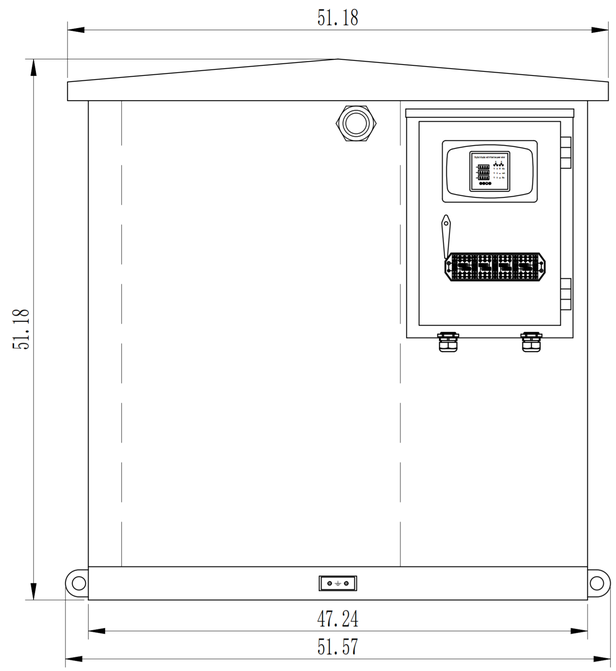

COMPONENT COMPARTMENT - FRONT VIEW

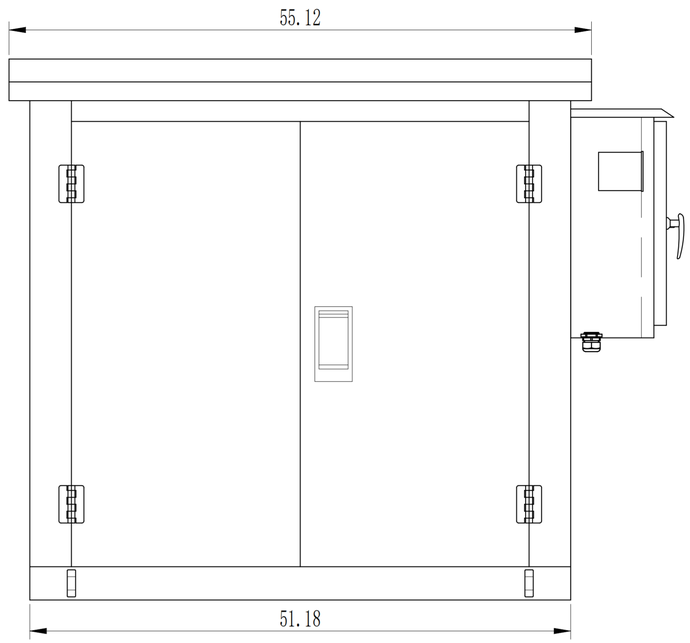

BOTTOM VIEW

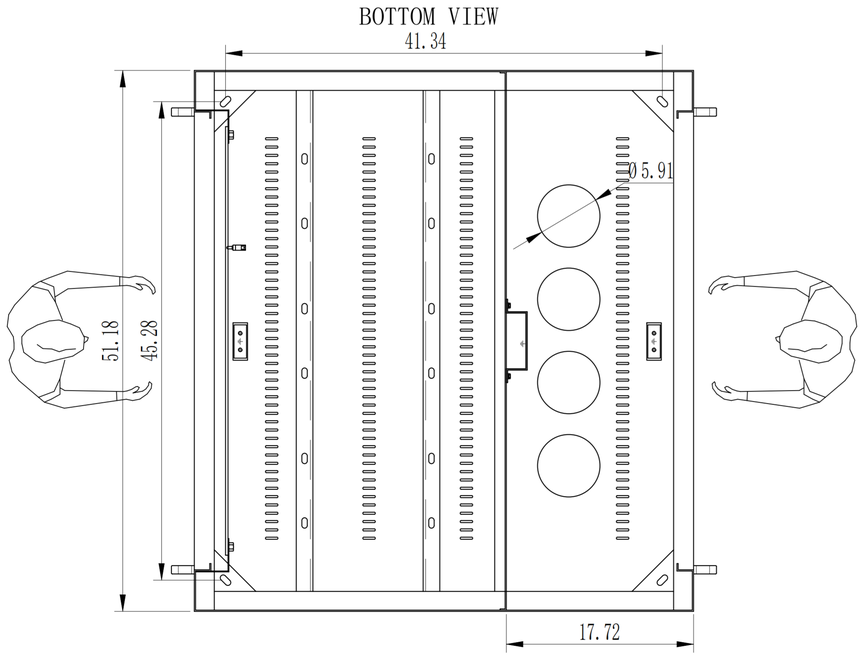

Technical Parameters		
01	Enclosure Color	Munsell™ 7GY 3.29/1.5 Bell Green
02	Enclosure Material	T2.0 Galvanized Steel Plate
03	Operating Altitude	≤1000M
04	Operating Environment	Outdoor, Pad-Mounted / Rack-Mounted
05	Protection Rating	NEMA 3R
06	Cable Entry/Exit	Bottom Entry, Bottom Exit (Cable)
07	Busbar Configuration	3-Phase, 3-Wire, Copper Busbar
08	Connection Cable	
09	Rated voltage	15000 V
10	Rated current	200 A
11	Frequency	60Hz
12	Dimensions Unit	Inches

Previous Drawing No.

Master Drawing No.

Signature

Date

Mark	Number	Changed file num	Signature	Date	Process		Standardization	
					Design		Approval	
					Verification		Date	2026-10-19

12.47V 200A Outdoor Metering Cabinet Outline Dimension Drawing

Production Quantity

Number

LARSON MAGNETICS

No. 1 Page

Tot. 2 Page

RIGHT SIDE VIEW

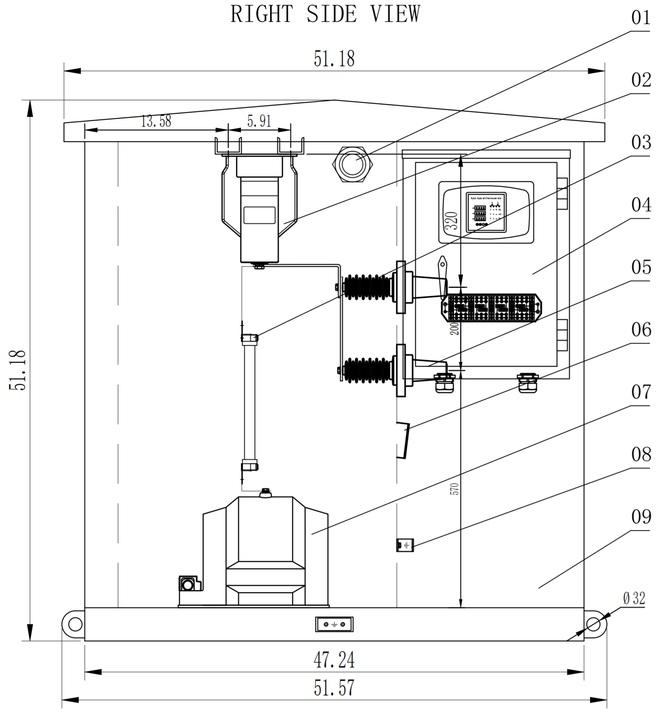

COMPONENT COMPARTMENT - FRONT VIEW (OUTER DOOR REMOVED)

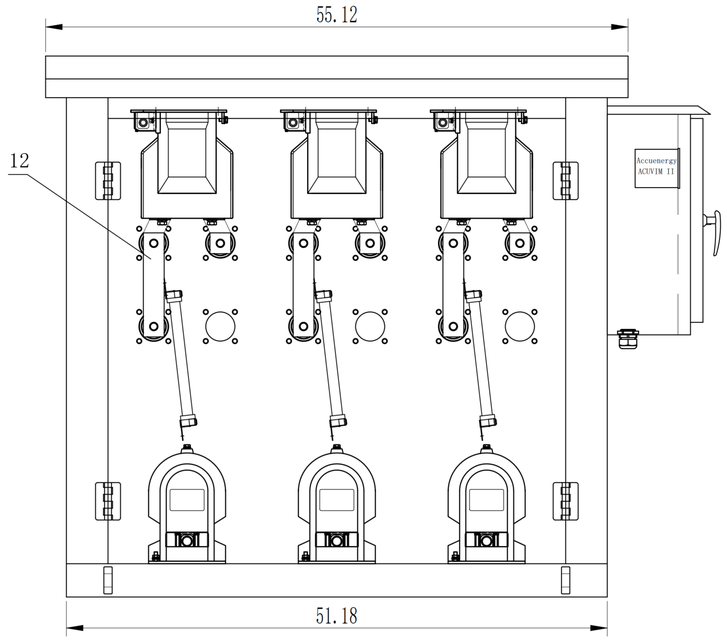

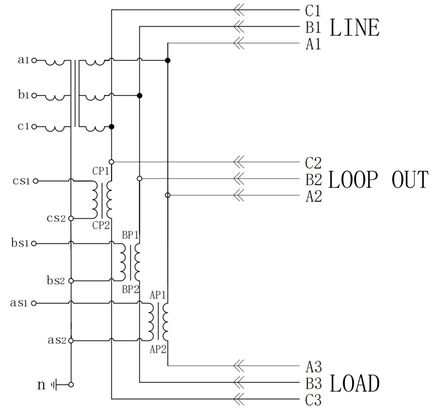

BOTTOM VIEW

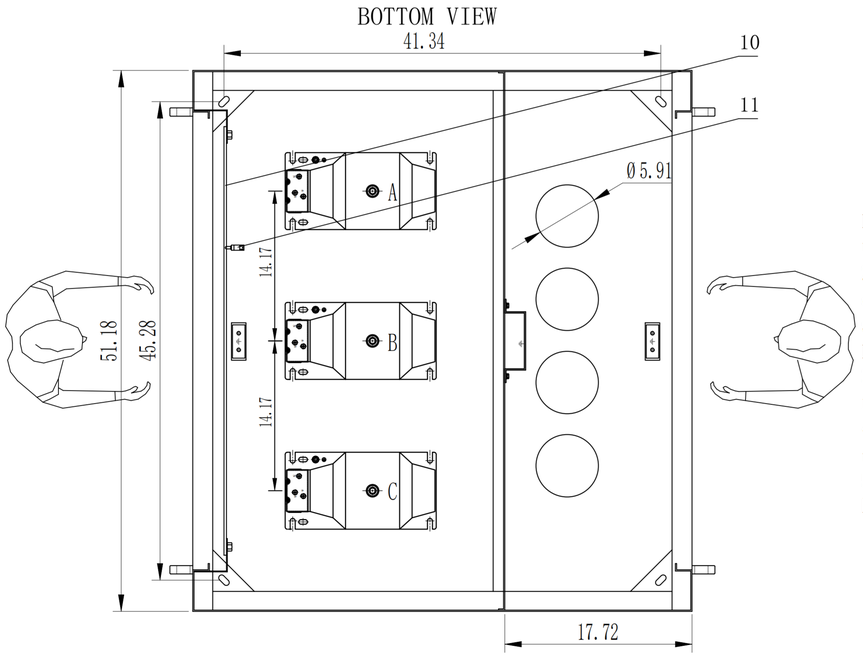

Installation Instructions:

1. Ventilation and pressure relief holes are provided on the bottom plate and under the top cover eaves, with welded 200-mesh stainless steel insect screens.
2. Two-hole main grounding pads are welded in both the instrument transformer (CT/PT) compartment and the cable compartment, capable of accepting #6 AWG solid to #2/0 AWG stranded copper wire. The ground busbar below the bushings shall have at least four 1/2"-13 NC threaded holes.
3. Liquid-tight connectors shall be used inside the metering box, connected via flexible metal conduit to route the secondary wiring within the enclosure.
4. Current transformers (CTs) shall be wired using #10 AWG solid copper wire; voltage transformers (PTs) shall be wired using #12 AWG solid copper wire.
5. Metering wire colors:VA: Orange,VB: Blue,VC: Yellow,VN: White,CT-A: Black,CT-B: Brown,CT-C: Red,CTR: Gray;

Test switch terminal arrangement:VA,VB,VC,VN,CTR-A,CT-A,CTR-B,CT-B,CTR-C,CT-C。

No.	Name	Spec	Qty	
15				
14				
13				
12	Main Busbar	.		
11	Limit Switch	1 NO / 1 NC	1	
10	Transparent Protective Door		1	
09	Outdoor Enclosure	59.06*51.18*47.24	1	
08	Ground Busbar (Copper)	PE TMY-1.18*0.12		
07	Potential Transformer (PT)		3	
06	Wall-Mount Location for Cable Terminations			
05	American-Style Bushing	L=295 600A	9	
04	Metering Cabinet	15.75*21.65*7.87	1	
03	Fuse		3	Provide 3 additional spare units
02	Current Transformer (CT)		3	
01	Liquid-Tight Connector	M50	1	

Previous Drawing No.

Master Drawing No.

Signature

Date

Mark	Number	Changed file num	Signature	Date	Process		Standardization	
					Design		Approval	
					Verification		Date	2026-10-19

200A Outdoor Metering Cabinet
Component General Assembly Drawing

Production Quantity
Number

LARSON MAGNETICS

No. 2 Page
Tot. 2 Page

RIGHT SIDE VIEW

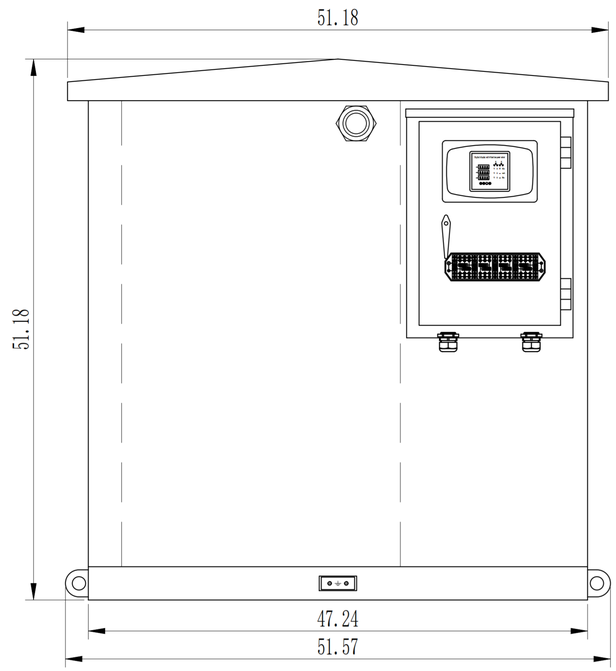

COMPONENT COMPARTMENT - FRONT VIEW

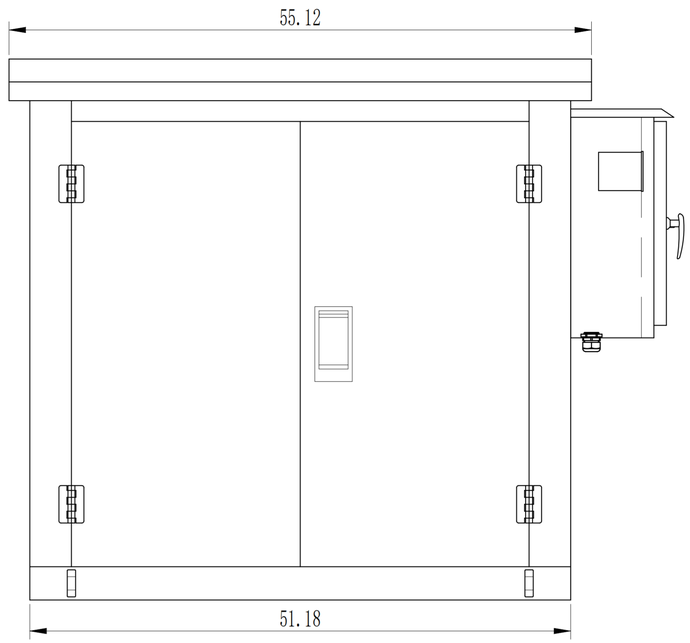

BOTTOM VIEW

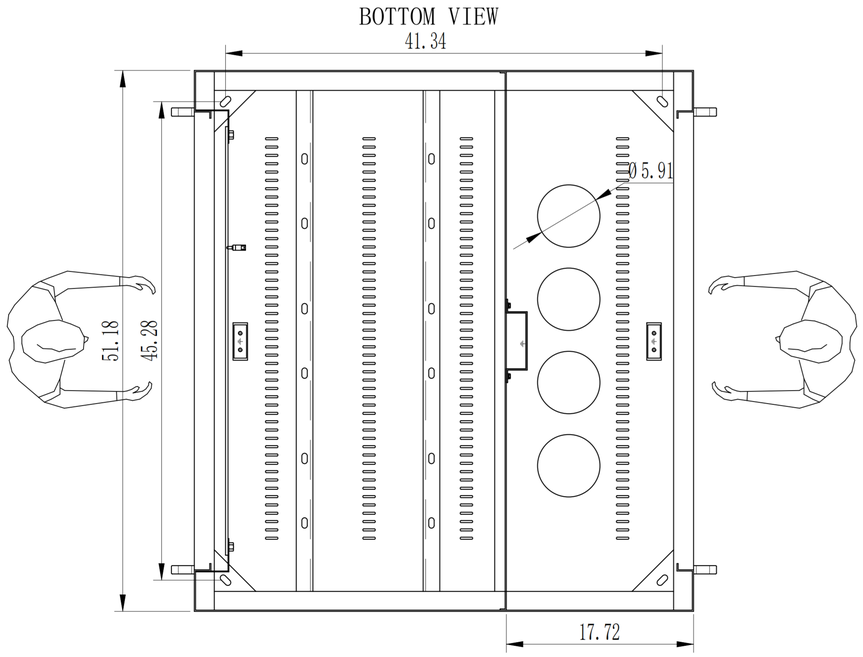

Technical Parameters		
01	Enclosure Color	Munsell™ 7GY 3.29/1.5 Bell Green
02	Enclosure Material	T2.0 Galvanized Steel Plate
03	Operating Altitude	≤1000M
04	Operating Environment	Outdoor, Pad-Mounted / Rack-Mounted
05	Protection Rating	NEMA 3R
06	Cable Entry/Exit	Bottom Entry, Bottom Exit (Cable)
07	Busbar Configuration	3-Phase, 3-Wire, Copper Busbar
08	Connection Cable	
09	Rated voltage	15000 V
10	Rated current	200 A
11	Frequency	60Hz
12	Dimensions Unit	Inches

Previous Drawing No.

Master Drawing No.

Signature

Date

Mark	Number	Changed file num	Signature	Date	Process		Standardization	
					Design		Approval	
					Verification		Date	2026-10-19

12.47V 200A Outdoor Metering Cabinet Outline Dimension Drawing

Production Quantity

Number

LARSON MAGNETICS

No. 1 Page

Tot. 2 Page

RIGHT SIDE VIEW

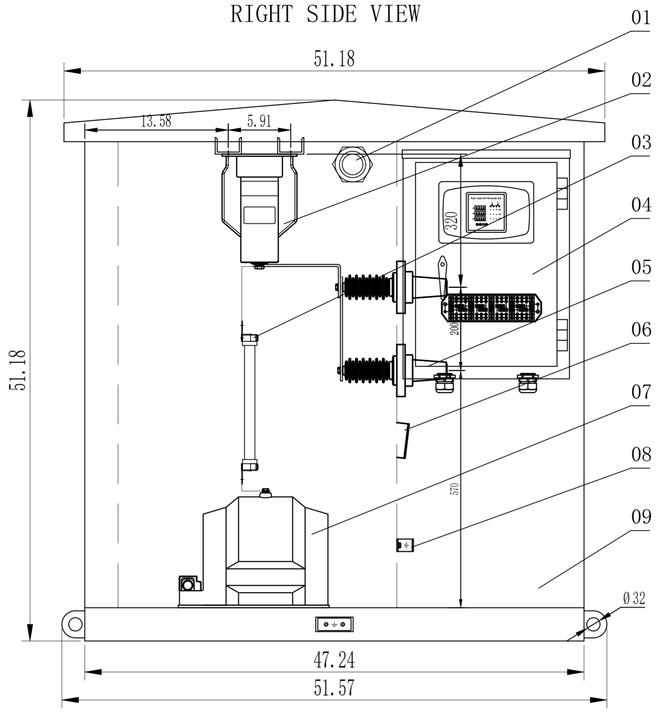

COMPONENT COMPARTMENT - FRONT VIEW (OUTER DOOR REMOVED)

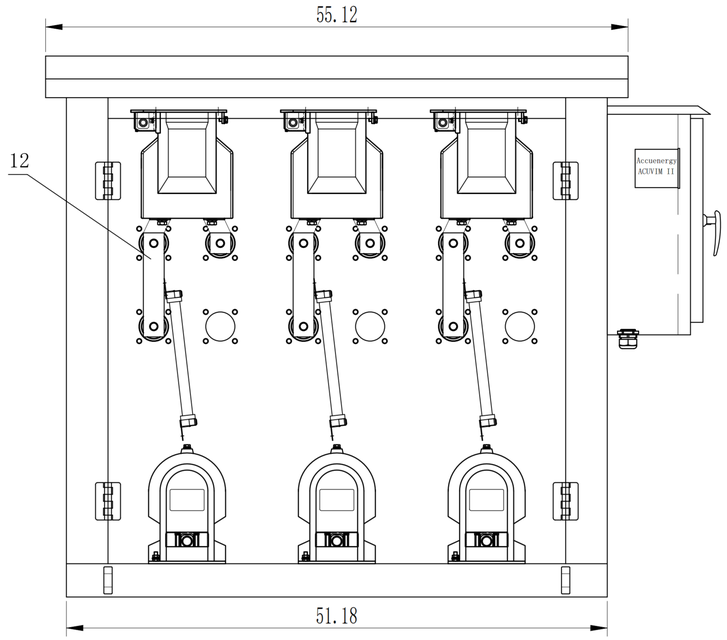

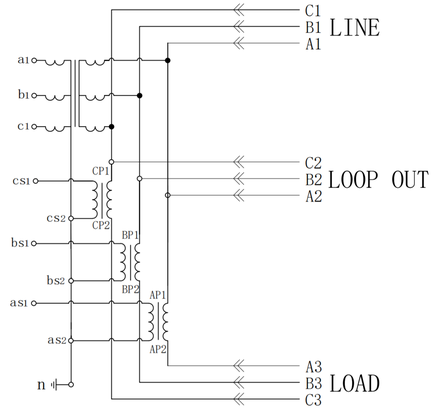

BOTTOM VIEW

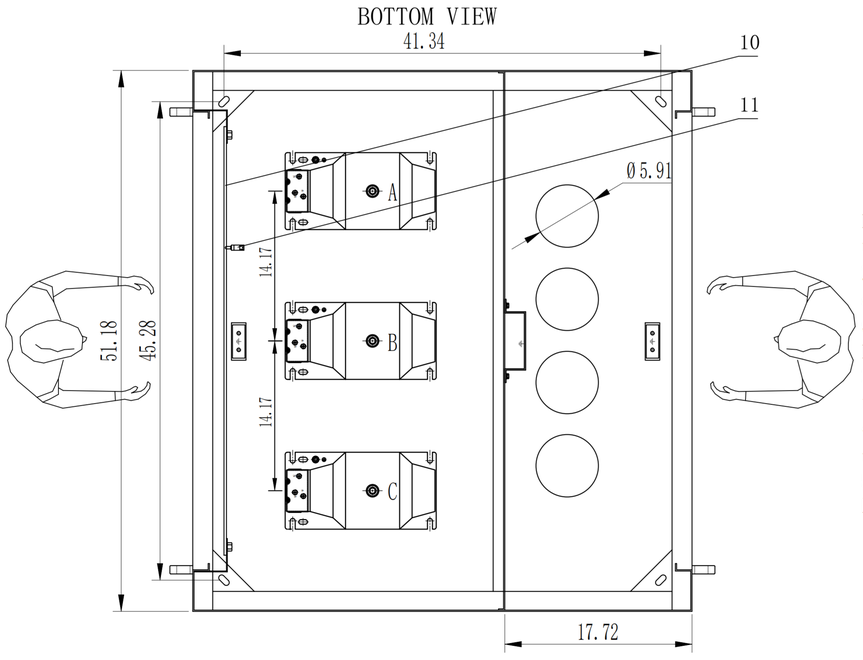

Installation Instructions:

1. Ventilation and pressure relief holes are provided on the bottom plate and under the top cover eaves, with welded 200-mesh stainless steel insect screens.
2. Two-hole main grounding pads are welded in both the instrument transformer (CT/PT) compartment and the cable compartment, capable of accepting #6 AWG solid to #2/0 AWG stranded copper wire. The ground busbar below the bushings shall have at least four 1/2"-13 NC threaded holes.
3. Liquid-tight connectors shall be used inside the metering box, connected via flexible metal conduit to route the secondary wiring within the enclosure.
4. Current transformers (CTs) shall be wired using #10 AWG solid copper wire; voltage transformers (PTs) shall be wired using #12 AWG solid copper wire.
5. Metering wire colors:VA: Orange,VB: Blue,VC: Yellow,VN: White,CT-A: Black,CT-B: Brown,CT-C: Red,CTR: Gray;

Test switch terminal arrangement:VA,VB,VC,VN,CTR-A,CT-A,CTR-B,CT-B,CTR-C,CT-C。

No.	Name	Spec	Qty	
15				
14				
13				
12	Main Busbar	.		
11	Limit Switch	1 NO / 1 NC	1	
10	Transparent Protective Door		1	
09	Outdoor Enclosure	59.06*51.18*47.24	1	
08	Ground Busbar (Copper)	PE TMY-1.18*0.12		
07	Potential Transformer (PT)		3	
06	Wall-Mount Location for Cable Terminations			
05	American-Style Bushing	L=295 600A	9	
04	Metering Cabinet	15.75*21.65*7.87	1	
03	Fuse		3	Provide 3 additional spare units
02	Current Transformer (CT)		3	
01	Liquid-Tight Connector	M50	1	

Previous Drawing No.

Master Drawing No.

Signature

Date

Mark	Number	Changed file num	Signature	Date	Process		Standardization	
					Design		Approval	
					Verification		Date	2026-10-19

200A Outdoor Metering Cabinet
Component General Assembly Drawing

Production Quantity
Number

LARSON MAGNETICS

No. 2 Page
Tot. 2 Page

Larson Electronics LLC
9419 E US HWY 175, Kemp, TX 75143
Phone: 800.369.6671

www.LarsonElectronics.com
Email: sales@LarsonElectronics.com
Fax: 903.765.7664



Larson Electronics LLC
9419 E US HWY 175, Kemp, TX 75143
Phone: 800.369.6671

www.LarsonElectronics.com
Email: sales@LarsonElectronics.com
Fax: 903.765.7664



Larson Electronics LLC
9419 E US HWY 175, Kemp, TX 75143
Phone: 800.369.6671

www.LarsonElectronics.com
Email: sales@LarsonElectronics.com
Fax: 903.765.7664



Larson Electronics LLC
9419 E US HWY 175, Kemp, TX 75143
Phone: 800.369.6671

www.LarsonElectronics.com
Email: sales@LarsonElectronics.com
Fax: 903.765.7664



Larson Electronics LLC
9419 E US HWY 175, Kemp, TX 75143
Phone: 800.369.6671

www.LarsonElectronics.com
Email: sales@LarsonElectronics.com
Fax: 903.765.7664

Frequently Asked Questions (FAQ)

There are no Faqs