Larson Electronics LLC
9419 E US HWY 175, Kemp, TX 75143
Phone: 800.369.6671

www.LarsonElectronics.com
Email: sales@LarsonElectronics.com
Fax: 903.765.7664

MPD-STS-3P-100A-480V-3PH-N1-M2

100 Amp Static Transfer Switch Automatic/Manual/Remote - 480V 3PH 3P4W 50-60Hz, NEMA 1

Product ID: 341966



Image: MPD-STS-3P-100A-480V-3PH-N1-M2

Larson Electronics LLC manufactures a wide variety of products, including custom built to spec designs. The pictures displayed for this unit are a general representation of form factor for the product line and may not accurately represent this exact configuration in every detail due to custom builds and changes between similar products in our standard catalog. The specifics for this configuration are listed in the specification table and supporting documentation (CAD files, Dimensional Drawing, Name Plate Diagram, Wiring Diagram, etc.). This means that specific details (receptacles, plugs, wires, connections, mounting brackets, external finishes, etc.) may not be accurately represented in images vs specifications. Please review specifications and do not order based solely on images.

MPD-STS-3P-100A-480V-3PH-N1-M2 Static Transfer Switch
Unit Type: Static Transfer Switch
System Phase: 3-Phase (3PH)
Voltage: 480V Delta or Wye
Frequency (Hz): 50-60 Hz (50-60 cycles)
Amps: 100A
Operating Temperature: 75 to 89 Degrees F.
Relative Humidity: 98 percent maximum, continuous
Operating Altitude: 545ft. Above mean sea level
Seismic Parameters: Refer to Section 26 05 48.00 14 Seismic Protection For Electrical Equipment
Lug Range: 1/0-14 AWG
Transition Modes: Automatic / Manual / Remote
Materials: Coated Steel
Finish: Electrostatically Applied and Baked Grey Powder Paint
Mount: Floor Mount, Bottom Feed
Dimensions: 63"-H x 27.5"-W x 23.6"-D
Weight: 265 lb
Larson Electronics manufacture a wide variety of custom power distribution systems. The pictures displayed for this unit are a general representation of form factor and may not accurately represent this exact configuration in every detail due to being one-time custom builds. The specifics for this configuration are listed in the specification table and one-line diagram.

Features/Ratings
NEMA 1 / IP20
Digital Power Technology (DPM)
ISO 9001
CE Listed
Max OCP: 100A @ 480V
UL Listed
Included Seismic Certification
Suitable for Government and Military Applications

Special Orders - Special Requirements
Contact us for special requirements
Toll Free: 1-800-369-6671
Intl: 1-903-270-1187
E-mail: sales@larsonelectronics.com

The MPD-STS-3P-100A-480V-3PH-N1-M2 from Larson Electronics is a Static Transfer

Switch that is ideal for managing electrical loads between two sources in industrial facilities. This 100-amp, 480V three-phase, four-wire controller handles timing, sensing, exercise functions, and transfer commands. Constructed of steel, the unit is housed in a NEMA 1 enclosure.

The MPD-STS-3P-100A-480V-3PH-N1-M2 offers accurate control of electrical power and loads in locations where a backup generator or energy management system is installed. This 100-amp unit features 480V Delta or Wye three phase compatibility and automatic, manual, and remote transition modes. The controller is designed to handle all commands related to the following: timing, sensing, exercise functions, and transfers.

The static transfer switch is constructed of coated steel with electrostatically applied and baked grey powder paint. Unit is designed for floor mounting installations with an open bottom feed configuration.

Applications: Backup generators, power management, energy systems, industrial facilities, commercial spaces, and more.

At Larson Electronics, we do more than meet your lighting needs. We also provide replacement, retrofit, and upgrade parts as well as industrial grade power accessories. Our craftsmen can custom build any lighting system and/or accessories to fit the unique demands of your operation. A commitment to honesty, quality, and dependability has made Larson Electronics a leader in the lighting and electronics business since 1973. Contact us today at 800-369-6671 or message sales@larsonelectronics.com for more information about our custom options tailored to meet your specific industry needs.

REV	DESCRIPTION	DATE
A	PRODUCT DESCRIPTION	09/1/2026

MPD-STS-3P-100A-480V-3PH-N1-M2

LARSON ELECTRONICS®

FRONT VIEW

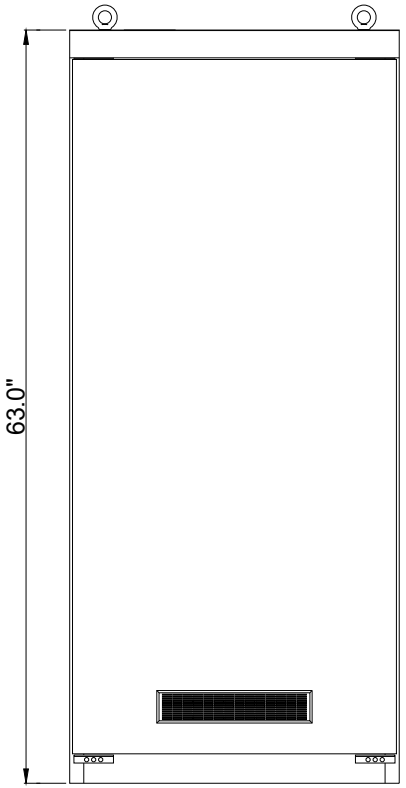

LEFT SIDE VIEW

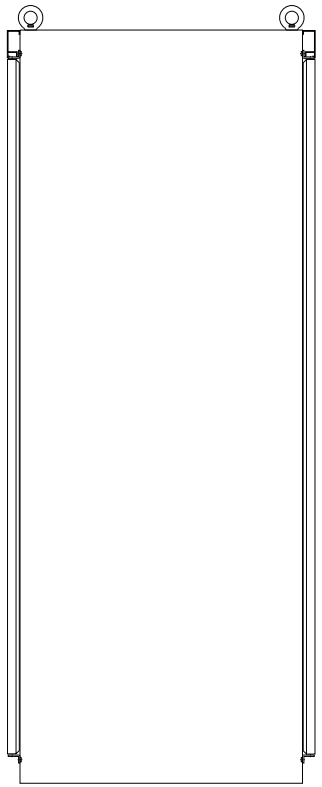

REAR VIEW

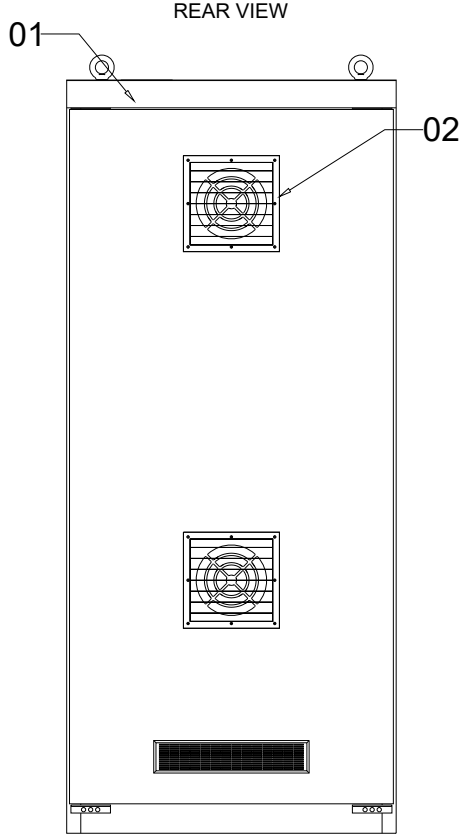

Specification	Value
Enclosure Color	ANSI 49 Gray
Enclosure Material	See instructions
Operating Altitude	≤1000 m (≤3,281 ft)
Operating Environment	Indoor, floor-mounted
Protection Rating	NEMA 1
Cable Entry/Exit	Bottom Entry & Bottom Exit (Cable)
Busbar Configuration	3-Phase 4-Wire, Copper Busbar
Connection Cable	1/0 AWG to 14 AWG
Rated Voltage	480V/277V
Rated Current	100 A
Frequency	50/60 Hz
Dimensions Unit	Inches (in)

BOTTOM VIEW

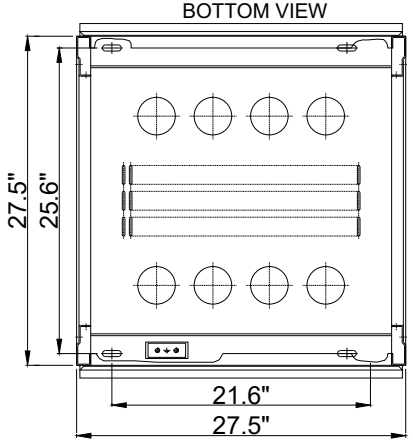

LARSON ELECTRONICS

9419 E US HWY 175,
KEMP, TX 75143

TITLE: OUTLINE DRAWINGS

DRAWN BY	DATE	REV
AA	09-1-2026	A
CHECKED BY	SHEET #	DRAWING #
	01 OF 02	101

FRONT VIEW

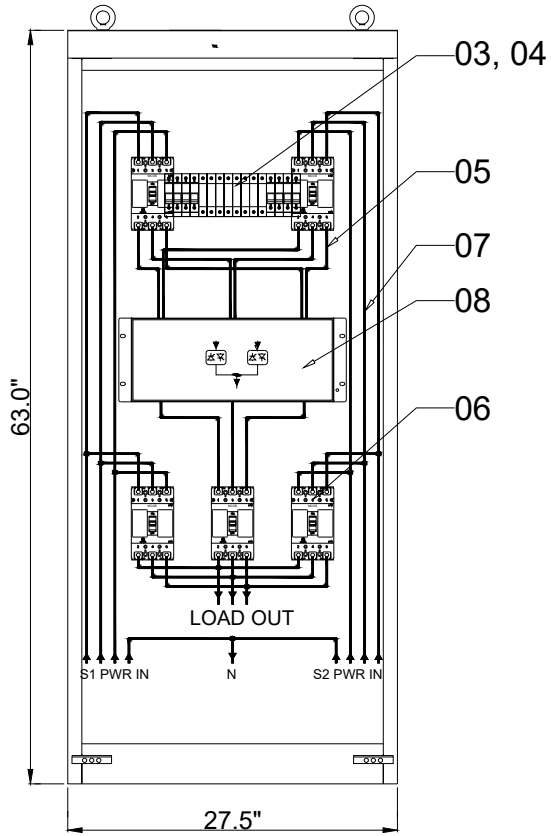

LEFT SIDE

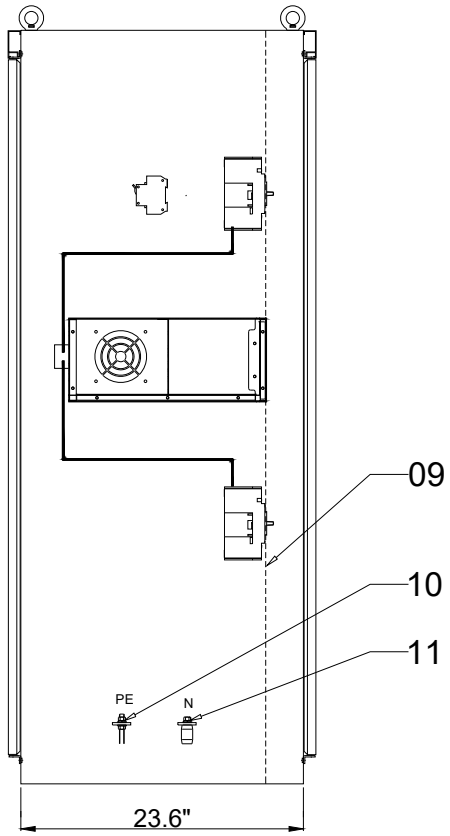

SINGLE LINE DIAGRAM

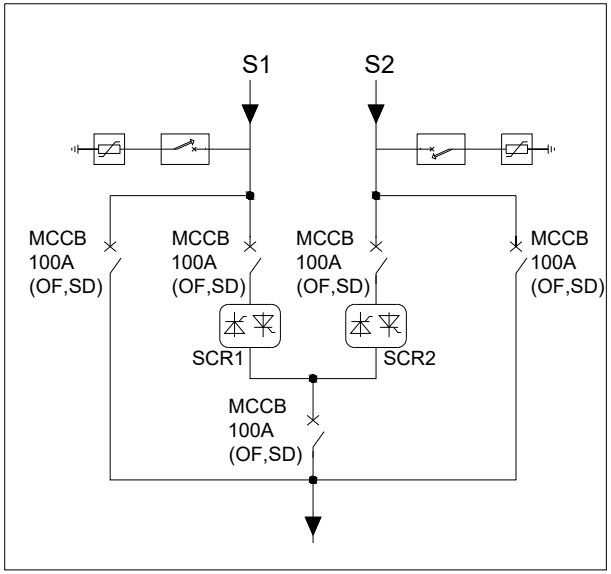

S.No	Name	Specification	Qty	Remarks
1	Modular Enclosure	Approx. 700 × 1600 × 700 mm (27.56 × 62.99 × 27.56 in)	1	
2	Axial Fan	Industrial ventilation fan	2	
3	Surge Protective Device	Type II, 40 kA, 4P	2	
4	Protection Fuse	40 A, 3P fuse	1	
5	Copper Busbar	ABC TMY, approx. 15 × 3 mm (0.59 × 0.12 in)		
6	MCCB	100A MCCB, 3-Pole, with Auxiliary Contact (OF) and Alarm Contact (SD)	5	
7	Copper Busbar	ABC TMY, approx. 30 × 10 mm (1.18 × 0.39 in)		
8	Static Transfer Switch	100 A, 3P	1	
9	Safety Barrier	Safety isolation barrier	1	
10	Copper Ground Busbar	Copper grounding busbar	1	
11	Neutral Copper Busbar	N TMY, approx. 15 × 3 mm (0.59 × 0.12 in)	1	

LARSON ELECTRONICS

9419 E US HWY 175,
KEMP, TX 75143

TITLE			
SLD AND BOM			
DRAWN BY	DATE	REV	
AA	09-1-2026	A	
CHECKED BY	SHEET #	DRAWING #	
	02 OF 02	101	

Larson Electronics LLC
9419 E US HWY 175, Kemp, TX 75143
Phone: 800.369.6671

www.LarsonElectronics.com
Email: sales@LarsonElectronics.com
Fax: 903.765.7664



Larson Electronics LLC
9419 E US HWY 175, Kemp, TX 75143
Phone: 800.369.6671

www.LarsonElectronics.com
Email: sales@LarsonElectronics.com
Fax: 903.765.7664

Frequently Asked Questions (FAQ)

There are no Faqs