Larson Electronics LLC
9419 E US HWY 175, Kemp, TX 75143
Phone: 800.369.6671

www.LarsonElectronics.com
Email: sales@LarsonElectronics.com
Fax: 903.765.7664

EPPO-ICB-480V-5W4P-100A

Explosion Proof Power Receptacle - Class I, II, III - 100A, 480Y/277 - Circuit Breaker Switch - T6 Temp Rating

Product ID: 332801



Image: EPPO-ICB-480V-5W4P-100A

Larson Electronics LLC manufactures a wide variety of products, including custom built to spec designs. The pictures displayed for this unit are a general representation of form factor for the product line and may not accurately represent this exact configuration in every detail due to custom builds and changes between similar products in our standard catalog. The specifics for this configuration are listed in the specification table and supporting documentation (CAD files, Dimensional Drawing, Name Plate Diagram, Wiring Diagram, etc.). This means that specific details (receptacles, plugs, wires, connections, mounting brackets, external finishes, etc.) may not be accurately represented in images vs specifications. Please review specifications and do not order based solely on images.

EPPO-ICB-480V-5W4P-100A Explosion Proof Receptacle
Receptacle Specs:
Listing: NRTL Listed for United States, Canada
Dimensions*: 8.9"L x 5.7"W x 9.7"H
Weight*: 25 lbs
Voltage Rating: 480Y/277V
Current Rating: 100 Amps
Configuration: 5-Wire, 4-Pole
Protection: On/Off Circuit Breaker
Aux Contact: Late-make Early-break, Rated @ 10 A, 1/3 HP 125/250 V AC
Materials: Cast Aluminum
Finish: Electrostatically Applied Polyester/Epoxy
Mount: Wall
Wiring: Regular Stranding #10 Maximum
Hub Configuration: Feed Thru or Dead End
Hub Size: 1" NPT
Temperature Rating: T6
*These numbers are approximates and subjects to changes. Refer to attachments.

Ratings
Class I, Divisions 1 & 2 Groups C & D
Class 1, Zones 1 & 2 IIB+H2, IIA
Class II, Divisions 1 & 2 Group F, G
Class III
NEMA 3, 4, 4X 7(B,C,D), 9(F,G)
T6 Temperature Rating

Special Orders - Special Requirements
Contact us for special requirements
Toll Free: 1-800-369-6671
Intl: 1-903-270-1187
Fax: 1-903-765-7664
E-mail: sales@larsonelectronics.com

The Larson Electronics EPPO-ICB-480V-5W4P-100A Explosion Proof Receptacle and Plug is approved for Class I, Divisions 1 & 2, Class II, Divisions 1 & 2 and Class III sites and provides a safe and secure power connection for portable or stationary electrical devices and equipment in hazardous locations. This 5-wire, 4-pole unit is constructed

of copper-free aluminum and operates with 480Y/277V AC. Rated at 100 amps, both devices can be used in Class I rated locations.

The explosion proof power receptacle and plug is designed for use in combustible work sites, including Class I. This 100-amp receptacle features compatibility with 480Y/277V AC. This 5-wire, 4-pole unit is constructed of copper-free aluminum with an electrostatically applied polyester/epoxy finish and contains an integral circuit breaker which provides short circuit and thermal overload protection as well as manually operable protection during connection and disconnection of electrical cables. This unit is easily wall mounted via two screw slot tabs at the side of the housing and contains a feed-thru or dead-end configuration with 1" NPT hub size.

The explosion proof plug takes on an octagon-style design. Insulators have high mechanical and dielectric strength and are low arc tracking. The device takes on a NEMA 4X rating when used with a compatible receptacle and a tightened locking ring. This plug is suitable for Type P marine cable.

Integral circuit protection: This unit contains a circuit breaker to allow safe, 16 Amp at 480Y/277V AC max operation. The circuit breaker also gives protection against short circuits and provides added thermal time delay overload protection. The plug and receptacle contacts cannot be made or broken under load. When the plug is inserted, the plug and receptacle contacts engage before the switch closes. When the plug is withdrawn, the switch opens before the plug and receptacle contacts disengage. This provides the maximum safety of a dead front receptacle. Arcing is isolated in a flame and dust-tight chamber. No special interlock device or manual switch, operators simply pull the plug straight out.

Interchangeability: The receptacle and plug are fully interchangeable with configured and certified to UL1686 devices, such as Crouse-Hinds® Arktite® or Appleton® Powertite®. Standard location receptacle bolt hole patterns match competitive back boxes so users can perform upgrades without changing back boxes in instances where changing the conduit system is difficult.

Suggested Applications: Manufacturing, Industrial, Warehouse, Lighting, Lighting, Wet areas or Locations Where Combustible Dust is Present.

At Larson Electronics, we do more than meet your lighting needs. We also provide replacement, retrofit, and upgrade parts as well as industrial grade power accessories. Our craftsmen can custom build any lighting system and/or accessories to fit the unique demands of your operation. A commitment to honesty, quality, and dependability has made Larson Electronics a leader in the lighting and electronics business since 1973. Contact us today at 800-369-6671 or message sales@larsonelectronics.com for more information about our custom options tailored to meet your specific industry needs.

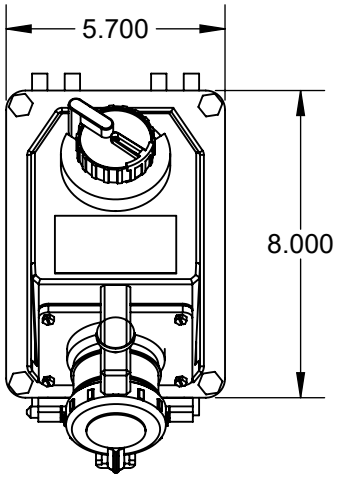

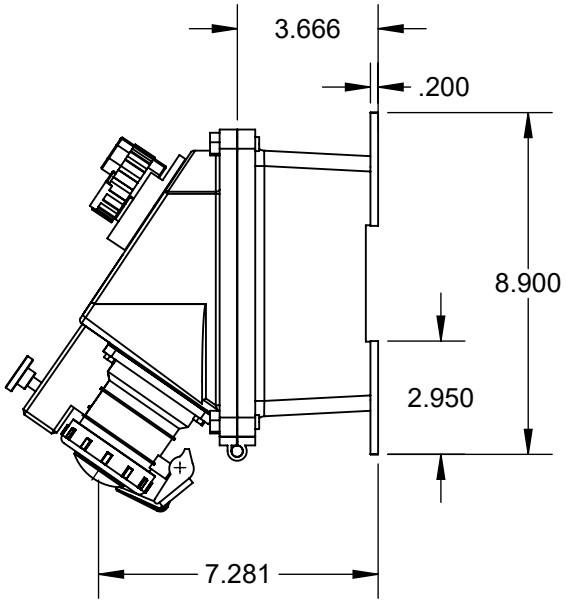

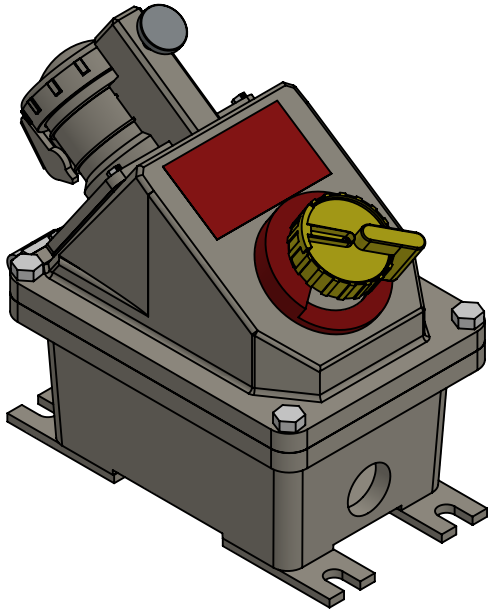

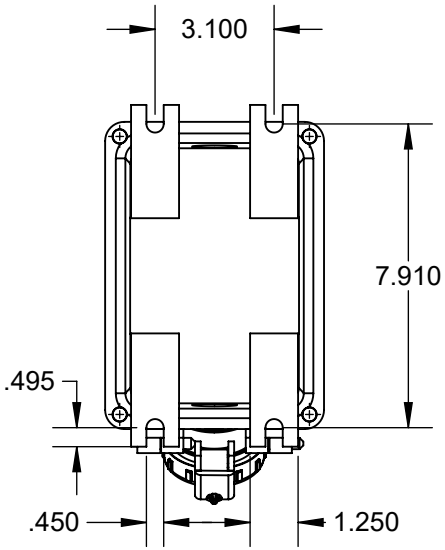

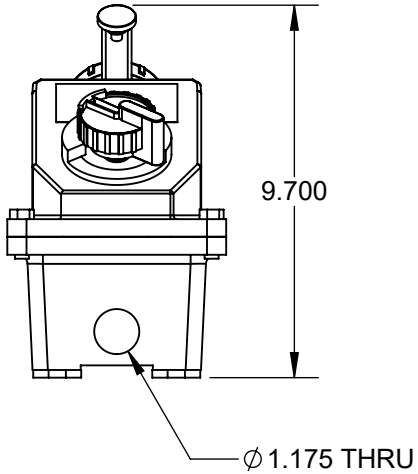

LARSON ELECTRONICS®

PART NUMBER:
EPPO-ICB-480V-5W4P-100A-FT

SIZE		REV
A		1

DIMENSIONS ARE IN INCHES				
DO NOT SCALE DRAWING	DATE	11/9/2026	SCALE: NTS	SHEET 1 OF 1

PROPRIETARY AND CONFIDENTIAL
THE INFORMATION CONTAINED IN THIS DRAWING IS THE SOLE PROPERTY OF LARSON ELECTRONICS LLC. ANY REPRODUCTION IN PART OR AS A WHOLE WITHOUT THE WRITTEN PERMISSION OF LARSON ELECTRONICS LLC IS PROHIBITED.

Larson Electronics LLC
9419 E US HWY 175, Kemp, TX 75143
Phone: 800.369.6671

www.LarsonElectronics.com
Email: sales@LarsonElectronics.com
Fax: 903.765.7664

Frequently Asked Questions (FAQ)

There are no Faqs