Larson Electronics LLC
9419 E US HWY 175, Kemp, TX 75143
Phone: 800.369.6671

www.LarsonElectronics.com
Email: sales@LarsonElectronics.com
Fax: 903.765.7664

MPD-EMC-R7-3P-DMR-15KV-YZ-100.5CT-N3R-M1

15 kV Electrical Metering Cabinet, Combinations (CT/PT) with SEL-735 Meter – 3-Phase – Dry Type – Pad Mount, Outdoor Service

Product ID: 332715



Image: MPD-EMC-R7-3P-DMR-15KV-YZ-100.5CT-N3R-M1

Larson Electronics LLC manufactures a wide variety of products, including custom built to spec designs. The pictures displayed for this unit are a general representation of form factor for the product line and may not accurately represent this exact configuration in every detail due to custom builds and changes between similar products in our standard catalog. The specifics for this configuration are listed in the specification table and supporting documentation (CAD files, Dimensional Drawing, Name Plate Diagram, Wiring Diagram, etc.). This means that specific details (receptacles, plugs, wires, connections, mounting brackets, external finishes, etc.) may not be accurately represented in images vs specifications. Please review specifications and do not order based solely on images.

MPD-EMC-R7-3P-DMR-15KV-YZ-100.5CT-N3R-M1 Electrical Metering Cabinet Combinations (CT/PT)
Unit Type: Electrical Metering Cabinet (EMC)
Unit Configuration: Combinations Current & Voltage Transformer (CT/PT), Dry Type
Rated Frequency: 60 Hz
Phase: Three Phase
Rated Current: 100A
Wiring Configuration: 4-Wire

Ratings

Complies with ANSI / IEEE C57.13
Complies with ANSI / IEEE C57.13.6
Complies with ANSI / IEEE C57.13.2
Complies with ANSI / IEEE C57.13.5

CT Specifications (Included Provisions Only):
Quantity: (3)
Type: Bar Primary Type
Rated Voltage: 15.5 kV
Current Ratio: 100:5
Accuracy Class: 0.3% Metering
Continuous Thermal Rating Factor (@30°C): 2.0

PT Specifications (Included Provisions Only):
Quantity: (3)
Primary Voltage: 12470V (Line-to-Line)
Primary Voltage Class: 15 kV
Primary BIL: 95 kV
Secondary Voltage: 240Y/120
Secondary Voltage Class: 1.2 kV
Voltage Ratio: 60:1
Thermal Rating (@30°C): 1000 VA

Metering Accuracy Class: 0.3%

Input Configuration: 200 amp dead break elbow, Set 31" max. above fixed floor
Output Configuration: 200 amp dead break elbow, Set 23" max. above fixed floor
Power Quality and Revenue Meter: Included, SEL 735, w/o Meter Socket, Included in Its Own Cabinet
Insulating Material: Air, Dry Type
Ground Pads: Included in CT/PT Sides
Phase To Ground Compartment Barriers: N/A
Winding Material: Copper
Service Condition: Outdoor
Altitude: N/A
Ambient Temperature Rating: N/A
Hardware Materials: Stainless Steel
Enclosure Class: NEMA 3R Weatherproof
Nameplate Materials: Corrosion Resistant Stainless Steel w/ Stainless Steel Screws or Rivets For CT & VT
Paint Color: Munsell™ 7GY 3.29/1.5 Bell Green
Mounting Provisions: Pad Mount
Lifting Provisions: Included
Dimensions: 59.06"W x 49.21"D x 59.06"H
Weight: 1,300 Lbs

Special Orders- Requirements

Contact us for special requirements
Toll Free: 1-800-369-6671
Intl: 1-903-270-1187
Fax: 1-903-765-7664
E-mail: sales@larsonelectronics.com

The MPD-EMC-R7-3P-DMR-15KV-YZ-100.5CT-N3R-M1 Electrical Metering Cabinet from Larson Electronics is designed for power utility applications in outdoor locations. The low operating costs, low heat emissions and low cost of ownership make this cabinet an ideal solution for revenue metering, high voltage system monitoring and power quality analysis. This cabinet is compatible with pad mounting installations.

PLEASE NOTE: ANY FREE SHIPPING OFFERS DO NOT APPLY TO POWER DISTRIBUTION PANELS, TRANSFORMERS, OR SUBSTATIONS*

Cabinet Features: The MPD-EMC-R7-3P-DMR-15KV-YZ-100.5CT-N3R-M1 is rated for 15 kV (12470V nominal), 200A continuous current, 95 kV BIL and 60 Hz. The system includes (3) 100:5 bar-type current transformers and (3) 60:1 potential transformers with 0.3% metering accuracy. The PT secondary provides 120/240V, 3-phase, 4-wire (wye) output for connection to the integrated revenue and power quality meter.

Insulation Fluid: The MPD-EMC-R7-3P-DMR-15KV-YZ-100.5CT-N3R-M1 is Dry type.

Primary Connections: The cabinet utilizes 200 amp deadbreak elbow connectors for primary connections. The separable insulated connectors are positioned per pad-mount utility standards and provide safe and reliable medium voltage terminations.

Secondary Connections: The CT/PT assembly features accessible terminal blocks for secondary connections. The terminal blocks are protected within a weatherproof metal compartment with gasketed access door for safe and organized wiring to the revenue meter.

Mount: The MPD-EMC-R7-3P-DMR-15KV-YZ-100.5CT-N3R-M1 is pad mounted.

Benefits: The MPD-EMC-R7-3P-DMR-15KV-YZ-100.5CT-N3R-M1 cabinet offers many benefits to consumers. This transformer provides owners with significant energy savings, as well as offering environmental benefits. Higher efficiency not only extends the life of the transformer, but also turns into cost savings for owners in the form of lower energy bills and

decreased cost of ownership.

Applications: Electric power distribution, utilities, utility power generation, power grids, substations, metering, high voltage system control and more.

Larson Electronics is a manufacturer and as such can build stationary and portable transformer systems to your specifications. Although we carry several models of power distribution transformer systems, we can deliver custom ordered units almost as quickly as our prebuilt units. If this model does not meet your needs, please contact us at 1-800-369-6671 or sales@larsonelectronics.com to discuss your specific requirements.

Side view

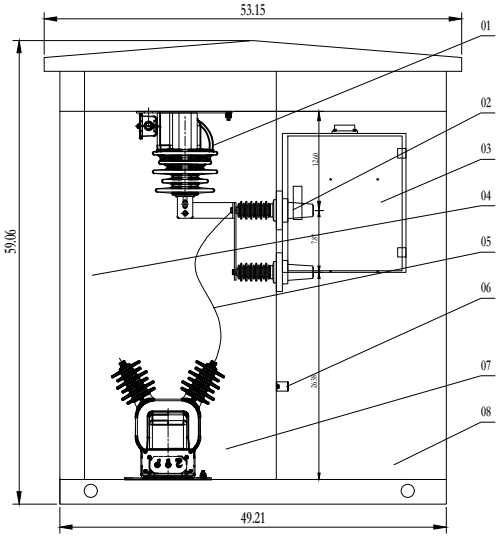

Front view

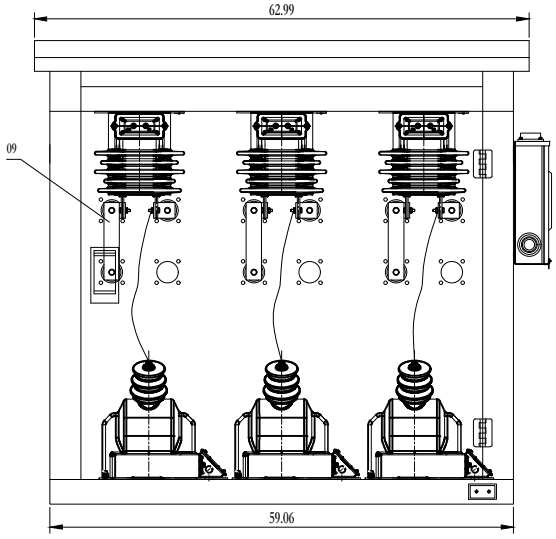

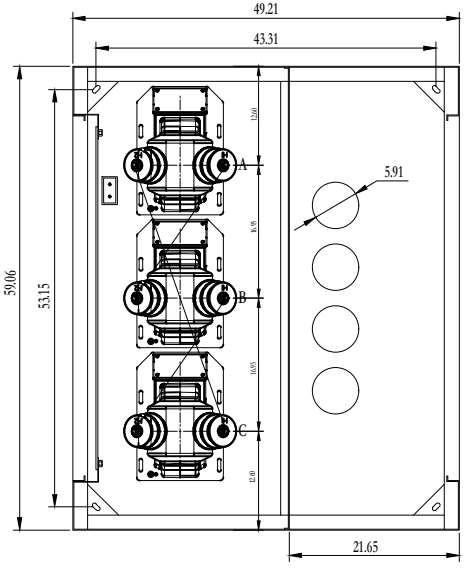

Bottom view

Technical Parameters		
01	Enclosure Color	Munsel™ 7GY 3.29/1.5 Bell Green
02	Enclosure Material	T2.5 Stainless Steel Plate
03	Operating Altitude	⩽2000M
04	Operating Environment	Outdoor, floor-mounted
05	Protection Rating	NEMA 3R
06	Wiring Configuration	Bottom Entry & Exit(Cable)
07	Busbar Configuration	Three-Phase Three-Wire,Copper Busbar
08	Connection Cable	
09	Rated Voltage	12470V
10	Rated Current	100A
11	Frequency	60Hz
12	Dimensions Unit	Inches

The unit is converted from millimeters to inches, and the value is rounded to two decimal places.

PT Wiring Diagram

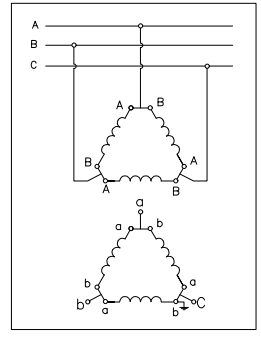

SEL-735 Install Terminal Box

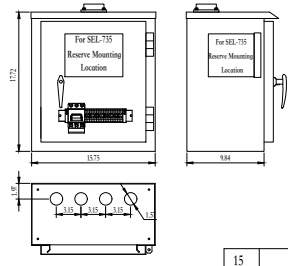

Single Line Diagram		
Switchgear Dimensions(W*D*H)	W-59.06*D-49.21*H-59.06	
Switchgear Name	Outdoor Metering Cabinet	
MC	Equipment Name	Specification / Qty
	Current Transformer	3
	Potential Transformer	3
	Cable Connector(mm) 2	
	Voltage Indicator	
	HV Surge Arrester	
Equipment Capacity/Calculated Current		
Cable Type & Spec.(mm) 2		
Remarks		

No.	Name	Type & Spec.	Qty	Note
15				
14				
13				
12				
11				
10				
09	Main Busbar			
08	Outdoor Enclosure	W-59.06*D-49.21*H-59.06	1	
07	Potential Transformer		3	
06	Neutral Grounding Busbar			
05	Voltage Connections		3	PT Dedicated
04	Inner Protective Barrier		1	
03	Terminal Box	Internal Mounting Terminals for SEL-735	1	Not included SEL-735
02	Bushing	630A	9	
01	Current Transformer		3	

Loan (common) registration
CAD Drawing
Previous Drawing No.
Master Drawing No.
Signature
Date

Project Name	Mark	Number	Changed file No.	Signature	Date

Process		Standardization	
Design		Approval	
Verification		Date	2026-04-30

Outdoor Metering Cabinet General Installation Drawing

Drawing Name
Number

LARSON MAGNETICS

No. 1 Page
Tot. 1 Page

Electrical Metering Cabinet Combinations (CT/PT).1	SPECS	CAN COMPLY WITH SPECS, "YES OR NO"	IF NOT PLEASE EXPLAIN
Unit Type	Electrical Metering Cabinet (EMC)	YES	
Unit Configuration	Combinations Current & Voltage Transformer (CT/PT), Dry Type	YES	
Rated Frequency	60 Hz	YES	
Phase	Three Phase	YES	
Rated Current	200A	YES	
Wiring Configuration	4-Wire	YES	
CT Specifications (Included Provisions Only)			
Quantity	(3)	YES	
Type	Bar Primary Type	YES	
Rated Voltage	15.5 kV	YES	
Current Ratio	100:5	YES	
Accuracy Class	0.3% Metering	YES	
Continuous Thermal Rating Factor (@30°C)	2.0	YES	
PT Specifications (Included Provisions Only)			
Quantity	(3)	YES	
Primary Voltage	12470V (Line-to-Line)	YES	
Primary Voltage Class	15 kV	YES	
Primary BIL	95 kV	YES	
Secondary Voltage	240Y/120	YES	
Secondary Voltage Class	1.2 kV	YES	
Voltage Ratio	60:1	YES	
Thermal Rating (@30°C)	1000 VA	YES	
Metering Accuracy Class	0.3%	YES	
Input Configuration	200 amp dead break elbow, Set 31” max. above fixed floor	YES	
Output Configuration	200 amp dead break elbow, Set 23” max. above fixed floor	YES	
Power Quality and Revenue Meter	Included, SEL 735, w/o Meter Socket, Included in Its Own Cabinet	YES	
Insulating Material	Air, Dry Type	YES	
Ground Pads	Included in CT/PT Sides	YES	
Phase To Ground Compartment Barriers	Red Reinforced Polyester	NO	Not Included
Winding Material	Copper	YES	
Service Condition	Outdoor	YES	
Altitude	N/A	-	
Ambient Temperature Rating	N/A	-	
Hardware Materials	Stainless Steel	YES	
Enclosure Class	NEMA 3R Weatherproof	YES	
Nameplate Materials	Corrosion Resistant Stainless Steel w/ Stainless Steel Screws or Rivets For CT & VT	YES	
Paint Color	Munsell™ 7GY 3.29/1.5 Bell Green	YES	
Mounting Provisions	Pad Mount	YES	
Lifting Provisions	Included	YES	
Dimensions	31.5 x 78.7 x 31.5	NO	W-59.06*D-49.21*H-59.06
Weight	661.4 lbs	NO	1300lbs

Side view

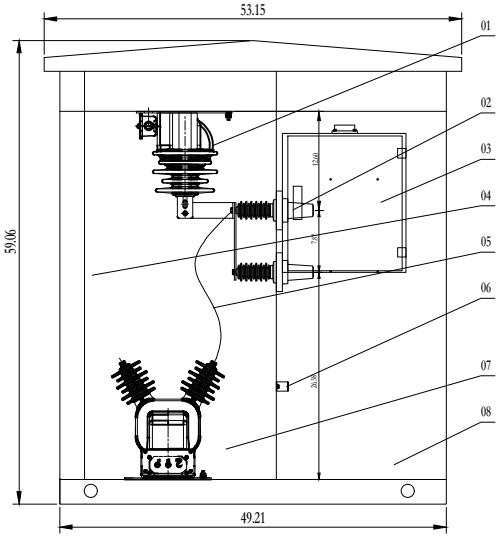

Front view

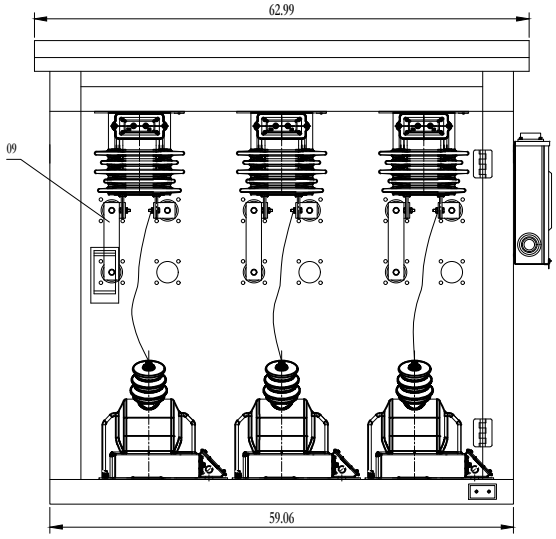

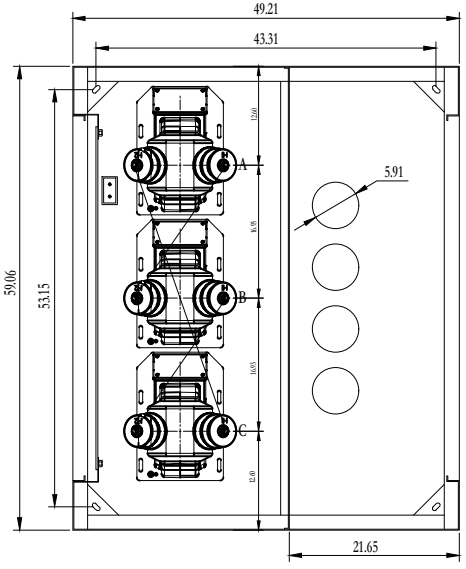

Bottom view

Technical Parameters		
01	Enclosure Color	Munsel™ 7GY 3.29/1.5 Bell Green
02	Enclosure Material	T2.5 Stainless Steel Plate
03	Operating Altitude	⩽2000M
04	Operating Environment	Outdoor, floor-mounted
05	Protection Rating	NEMA 3R
06	Wiring Configuration	Bottom Entry & Exit(Cable)
07	Busbar Configuration	Three-Phase Three-Wire,Copper Busbar
08	Connection Cable	
09	Rated Voltage	12470V
10	Rated Current	100A
11	Frequency	60Hz
12	Dimensions Unit	Inches

The unit is converted from millimeters to inches, and the value is rounded to two decimal places.

PT Wiring Diagram

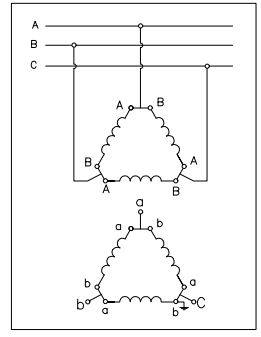

SEL-735 Install Terminal Box

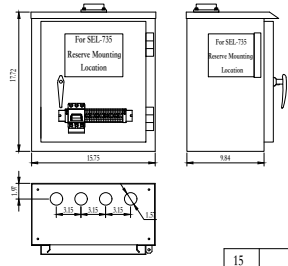

Single Line Diagram		
Switchgear Dimensions(W*D*H)	W-59.06*D-49.21*H-59.06	
Switchgear Name	Outdoor Metering Cabinet	
MC	Equipment Name	Specification / Qty
	Current Transformer	3
	Potential Transformer	3
	Cable Connector(mm) 2	
	Voltage Indicator	
	HV Surge Arrester	
Equipment Capacity/Calculated Current		
Cable Type & Spec.(mm) 2		
Remarks		

No.	Name	Type & Spec.	Qty	Note
15				
14				
13				
12				
11				
10				
09	Main Busbar			
08	Outdoor Enclosure	W-59.06*D-49.21*H-59.06	1	
07	Potential Transformer		3	
06	Neutral Grounding Busbar			
05	Voltage Connections		3	PT Dedicated
04	Inner Protective Barrier		1	
03	Terminal Box	Internal Mounting Terminals for SEL-735	1	Not included SEL-735
02	Bushing	630A	9	
01	Current Transformer		3	

Loan (common) registration
CAD Drawing
Previous Drawing No.
Master Drawing No.
Signature
Date

Project Name	Mark	Number	Changed file No.	Signature	Date

Process		Standardization	
Design		Approval	
Verification		Date	2026-04-30

Outdoor Metering Cabinet General Installation Drawing

Drawing Name
Number

LARSON MAGNETICS

No. 1 Page
Tot. 1 Page

Electrical Metering Cabinet Combinations (CT/PT).1	SPECS	CAN COMPLY WITH SPECS, "YES OR NO"	IF NOT PLEASE EXPLAIN
Unit Type	Electrical Metering Cabinet (EMC)	YES	
Unit Configuration	Combinations Current & Voltage Transformer (CT/PT), Dry Type	YES	
Rated Frequency	60 Hz	YES	
Phase	Three Phase	YES	
Rated Current	200A	YES	
Wiring Configuration	4-Wire	YES	
CT Specifications (Included Provisions Only)			
Quantity	(3)	YES	
Type	Bar Primary Type	YES	
Rated Voltage	15.5 kV	YES	
Current Ratio	100:5	YES	
Accuracy Class	0.3% Metering	YES	
Continuous Thermal Rating Factor (@30°C)	2.0	YES	
PT Specifications (Included Provisions Only)			
Quantity	(3)	YES	
Primary Voltage	12470V (Line-to-Line)	YES	
Primary Voltage Class	15 kV	YES	
Primary BIL	95 kV	YES	
Secondary Voltage	240Y/120	YES	
Secondary Voltage Class	1.2 kV	YES	
Voltage Ratio	60:1	YES	
Thermal Rating (@30°C)	1000 VA	YES	
Metering Accuracy Class	0.3%	YES	
Input Configuration	200 amp dead break elbow, Set 31” max. above fixed floor	YES	
Output Configuration	200 amp dead break elbow, Set 23” max. above fixed floor	YES	
Power Quality and Revenue Meter	Included, SEL 735, w/o Meter Socket, Included in Its Own Cabinet	YES	
Insulating Material	Air, Dry Type	YES	
Ground Pads	Included in CT/PT Sides	YES	
Phase To Ground Compartment Barriers	Red Reinforced Polyester	NO	Not Included
Winding Material	Copper	YES	
Service Condition	Outdoor	YES	
Altitude	N/A	-	
Ambient Temperature Rating	N/A	-	
Hardware Materials	Stainless Steel	YES	
Enclosure Class	NEMA 3R Weatherproof	YES	
Nameplate Materials	Corrosion Resistant Stainless Steel w/ Stainless Steel Screws or Rivets For CT & VT	YES	
Paint Color	Munsell™ 7GY 3.29/1.5 Bell Green	YES	
Mounting Provisions	Pad Mount	YES	
Lifting Provisions	Included	YES	
Dimensions	31.5 x 78.7 x 31.5	NO	W-59.06*D-49.21*H-59.06
Weight	661.4 lbs	NO	1300lbs

Larson Electronics LLC
9419 E US HWY 175, Kemp, TX 75143
Phone: 800.369.6671

www.LarsonElectronics.com
Email: sales@LarsonElectronics.com
Fax: 903.765.7664



Larson Electronics LLC
9419 E US HWY 175, Kemp, TX 75143
Phone: 800.369.6671

www.LarsonElectronics.com
Email: sales@LarsonElectronics.com
Fax: 903.765.7664



Larson Electronics LLC
9419 E US HWY 175, Kemp, TX 75143
Phone: 800.369.6671

www.LarsonElectronics.com
Email: sales@LarsonElectronics.com
Fax: 903.765.7664



Larson Electronics LLC
9419 E US HWY 175, Kemp, TX 75143
Phone: 800.369.6671

www.LarsonElectronics.com
Email: sales@LarsonElectronics.com
Fax: 903.765.7664



Larson Electronics LLC
9419 E US HWY 175, Kemp, TX 75143
Phone: 800.369.6671

www.LarsonElectronics.com
Email: sales@LarsonElectronics.com
Fax: 903.765.7664

Frequently Asked Questions (FAQ)

There are no Faqs