Larson Electronics LLC
9419 E US HWY 175, Kemp, TX 75143
Phone: 800.369.6671

www.LarsonElectronics.com
Email: sales@LarsonElectronics.com
Fax: 903.765.7664

## MPD-CS3-CLP6.200AF-YT0-Z-5.CLR6-5.C04-1.N10-M1

# Portable Spider Box, 208Y/120V 3PH Input, (1 Set) 400A Single-pole 16-Ser. Male Camlock Line-In Receptacles, (1 Set) 400A Single-pole 16-Ser. Female Camlock Feed-thru Receptacles, (5) CS6369 (1) 5-20R GFCI Duplex Outlets, Cage Frame/Safety Yellow, NEMA 3R

**Product ID: 331436**



Image: MPD-CS3-CLP6.200AF-YT0-Z-5.CLR6-5.C04-1.N10-M1

**Larson Electronics LLC manufactures a wide variety of products, including custom built to spec designs. The pictures displayed for this unit are a general representation of form factor for the product line and may not accurately represent this exact configuration in every detail due to custom builds and changes between similar products in our standard catalog. The specifics for this configuration are listed in the specification table and supporting documentation (CAD files, Dimensional Drawing, Name Plate Diagram, Wiring Diagram, etc.). This means that specific details (receptacles, plugs, wires, connections, mounting brackets, external finishes, etc.) may not be accurately represented in images vs specifications. Please review specifications and do not order based solely on images.**

**This unit is Made In USA - Manufactured in Texas**

**MPD-CS3-CLP6.200AF-YT0-Z-5.CLR6-5.C04-1.N10-M1 Spider Box**

**Line-In Cord Cap:** (1 Set) 400A Single-pole 16-Ser. Male Camlock Receptacles [Green, Black, Red, Blue, White] [600V] w/ Flip Covers
**Feed-Thru:** (1 Set) 400A Single-pole 16-Ser. Female Camlock Receptacles [Green, Black, Red, Blue, White] [600V] w/ Flip Covers
**Primary Voltage:** 208Y/120V AC Wye
**Primary Phase:** 3-Phase (3PH)
**Primary Frequency:** 60 Hz (60-cycles)
**Primary Panel:** 208Y/120V 3PH 200A MLO Yellow Spider Box N3R
**Primary Breaker(s):** (5) 50A 2P MCB [250V]; (1) 20A 1P MCB [125V]
**Primary Outlet(s):** (5) CS6369 California-Style Twist-Lock Receptacles [125/250V]; (1) 5-20R NEMA Duplex-GFCI [125V]
**Primary Protection:** MCB Circuit Breakers; Weatherproof Covers; GFCI's
**Housing Material:** Steel
**Form Factor:** Yellow Powder Coated Spider Box in Black Rugged Cage Frame
**Mounting:** Rugged Cage Mount
**Dimensions:** -
**Weight:** -

**Ratings/Approvals**

**Max Primary OCP:** 200A @ 208V

**Min Primary OCP:** -

NRTL Certified to UL 1640
NEMA 3R Weatherproof
Overload Protection
Short Circuit Protection

**Special Orders - Special Requirements**

Contact us for special requirements
**Toll Free:** 1-800-369-6671
**Intl:** 1-214-616-6180
**Fax:** 1-903-765-7664
**E-mail:** sales@larsonelectronics.com

**This unit is Made In USA - Manufactured in Texas**

**The MPD-CS3-CLP6.200AF-YT0-Z-5.CLR6-5.C04-1.N10-M1 from Larson Electronics is a Portable Spider Box for indoor, outdoor, and rugged applications. This unit allows operators to use three-phase 208Y/120V AC Wye power via one set of 400A single-pole 16-ser. male camlock receptacles [green, black, red, blue, white] [600V] with flip covers. The device supports one set of 400A single-pole 16-ser. female camlock feed-thru receptacles [green, black, red, blue, white] [600V] with flip covers for 600V equipment, as well as five CS6369 California-style twist-lock receptacles and one 5-20 GFCI duplex output receptacle for equipment. For robust protection, the safety yellow spider box is NEMA 3R rated and protected by rugged cage frame.**

**Operation:**

• Primary Voltage: 208Y/120V AC Wye 3PH

• Primary Panel: 208Y/120V 3PH 200A MLO Yellow Spider Box N3R

• Primary Breaker(s): (5) 50A 2P MCB [250V]; (1) 20A 1P MCB [125V]

• Primary Outlet(s): (5) CS6369 California-Style Twist-Lock Receptacles [125/250V]; (1) 5-20R NEMA Duplex-GFCI [125V]

• Transformer: N/A

• Secondary Voltage: N/A

• Secondary Panel: N/A

• Secondary Breaker(s): N/A

• Secondary Outlet(s): N/A

*See specification table at the top of the page for more information about the power distribution system.

This portable spider box has one set of 400A single-pole 16-ser. male camlock receptacles [green, black, red, blue, white] [600V] for bringing three-phase 208Y/120V AC Wye power into the unit. The device supports one set of 400A single-pole 16-ser. female camlock feed-thru receptacles [green, black, red, blue, white] [600V]. Operators may access five 50-amp 2-pole 250V miniature circuit breakers protecting five 50-amp CS6369 California-style 125/250V twist-lock outlets and one 20-amp 1-pole 125V miniature circuit breaker protecting one 20-amp 5-20 NEMA GFCI duplex outlets.

The MPD-CS3-CLP6.200AF-YT0-Z-5.CLR6-5.C04-1.N10-M1 spider box features short circuit and overload protection. Should circuit overload occur, the unit will automatically shut down to protect the spider box from damage.

The housing on the MPD-CS3-CLP6.200AF-YT0-Z-5.CLR6-5.C04-1.N10-M1 is constructed of steel with a NEMA 3R enclosure rating. This safety yellow device is approved for wet locations and features heavy-duty impact/flame resistant weatherproof covers. A heavy-duty black cage

frame protects the unit from drops, bumps, and objects.

**Certification:** All units are built in accordance to NFPA 70 (National Electric Code). All equipment is NEMA 3R rated for indoor and outdoor use and provide a degree of protection against dirt, water, and ice. NEMA 4 and NEMA 4X equipment can be equipped upon request.

**Applications:** Indoor or outdoor applications including but not limited to, construction sites, plant maintenance, plant turnarounds, shows, exhibits, and shipyard operations. These units are popularly used in applications where external power sources are often necessary. We also offer class rated transformers for use within explosion proof and hazardous location environments.

Larson Electronics is a manufacturer and we can build portable power distribution systems to your specifications. Although we carry several models of portable power distribution systems in stock, we can deliver custom ordered units almost as quickly as our prebuilt units. If this model does not meet your needs, please contact us at 1-800-369-6671 or sales@larsonelectronics.com to discuss your specific requirements.

| REV | DESCRIPTION | DATE |
| --- | --- | --- |
| A | QUOTE | 01/26/2026 |

# MPD-CS3-CLP6.200AF-YT0-Z-5.CLR6-5.C04-1.N10-M1

LARSON ELECTRONICS®

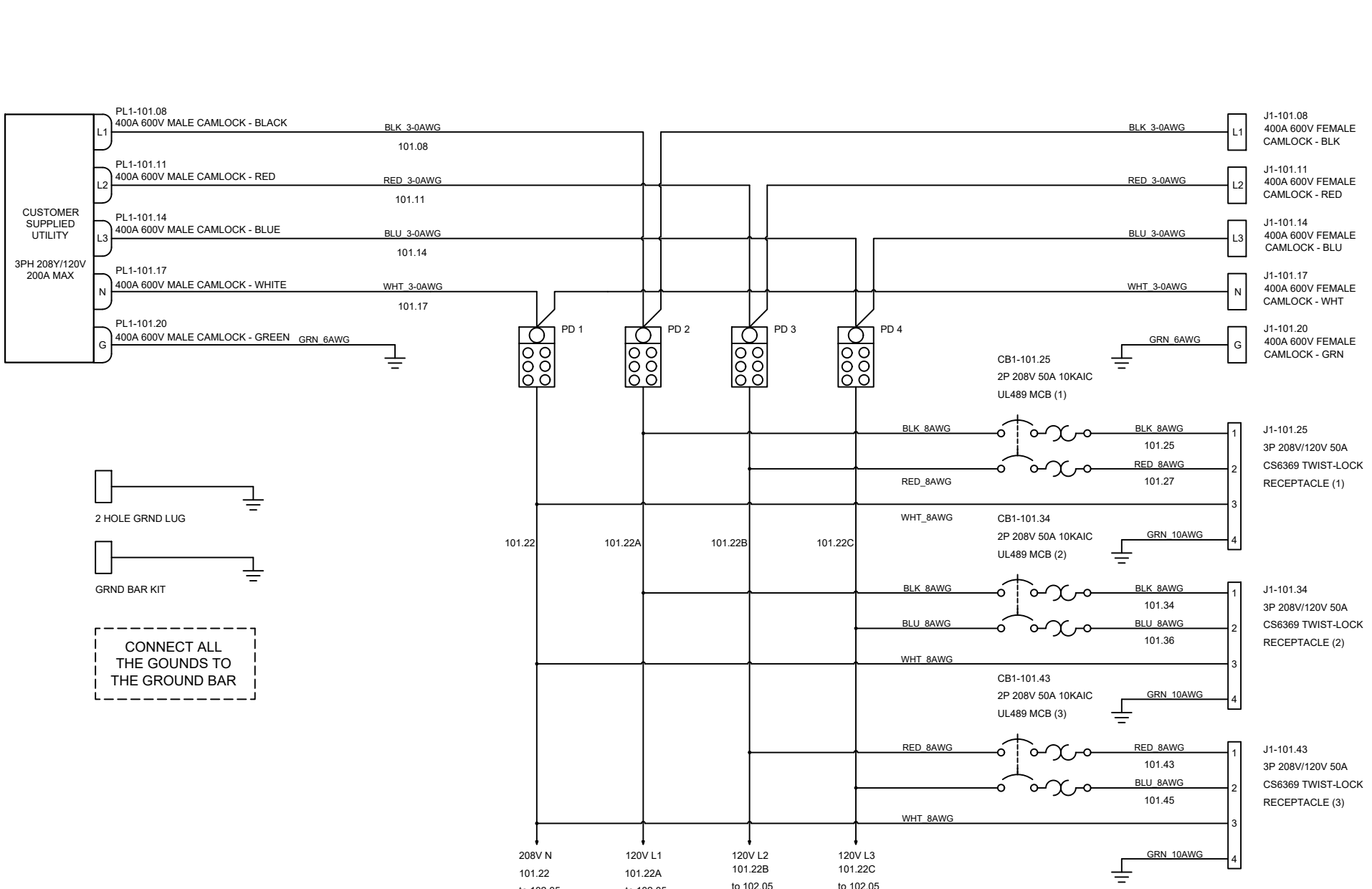


| | | | |
|---|---|---|---|
| LARSON ELECTRONICS<br>9419 E US HWY 175,<br>KEMP, TX 75143 | TITLE: MPD-CS3-CLP6.200AF-YT0-Z-5.CLR6-5.C04-1.N10-M1 | | |
| | DRAWN BY: L.Calib | DATE: 01-26-2026 | REV: A |
| | CHECKED BY: | SHEET #: 1 OF 3 | DRAWING #: 101 |

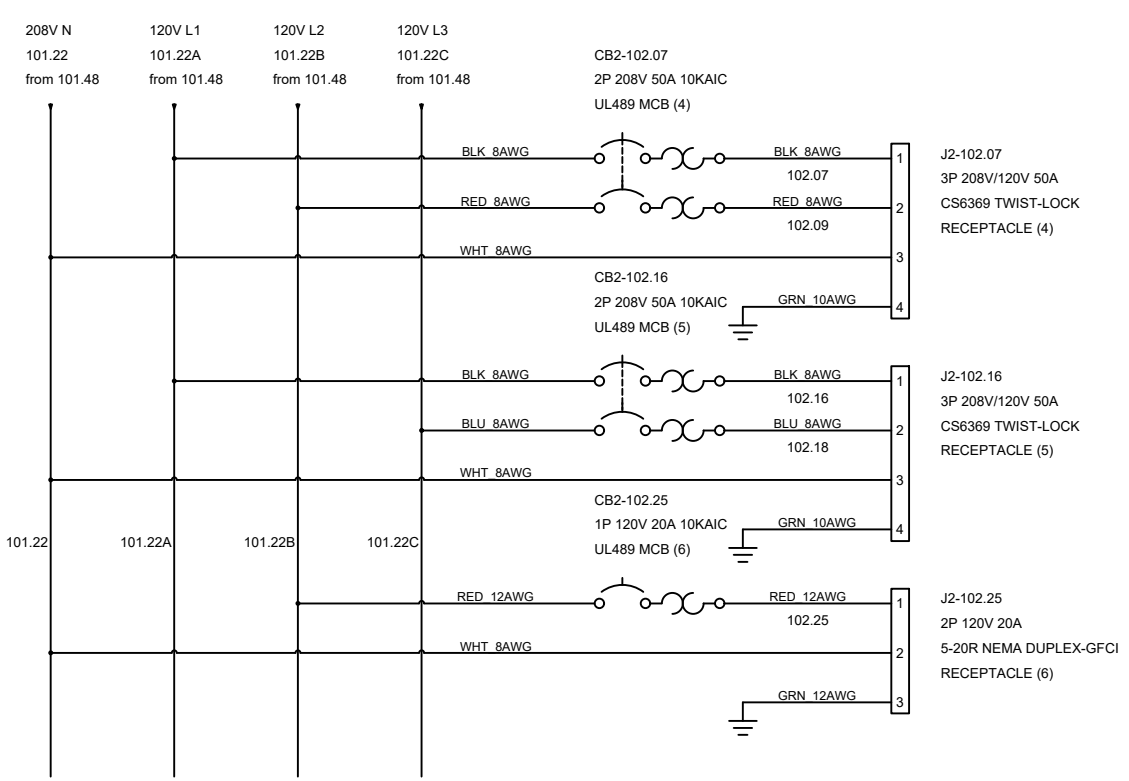


| | | | |
|---|---|---|---|
| LARSON ELECTRONICS<br>9419 E US HWY 175,<br>KEMP, TX 75143 | TITLE: MPD-CS3-CLP6.200AF-YT0-Z-5.CLR6-5.C04-1.N10-M1 | | |
| | DRAWN BY: L.Calib | DATE: 01-26-2026 | REV: A |
| | CHECKED BY: | SHEET #: 2 OF 3 | DRAWING #: 102 |

| TAGS | QTY | CATALOG | DESCRIPTION |
|---|---|---|---|
| J1-101.25<br>J1-101.34<br>J1-101.43<br>J2-102.07<br>J2-102.16 | 5 | UNV00008818 | CS6369 50A 250V 3P RECEPTACLE |
| 2 HOLE GRND LUG | 1 | UNV00007136 | 2 HOLE GROUND LUG |
| PL1-101.17 | 1 | UNV00002290 | 600V 400A MALE CAM LOCK WHITE |
| PL1-101.08 | 1 | UNV00008711 | 600V 400A MALE CAM LOCK BLACK |
| PL1-101.20 | 1 | UNV00008712 | 600V 400A CAM LOCK GREEN |
| PL1-101.11 | 1 | UNV00008715 | 600V 400A MALE CAM LOCK RED |
| J1-101.20 | 1 | UNV00013752 | 600V UPTO 400A #2-4/0 AWG WHT FEMALE CAM LOCK RECEPTACLE |
| J1-101.08 | 1 | UNV00013753 | 600V UPTO 400A #2-4/0 AWG BLK FEMALE CAM LOCK RECEPTACLE |
| J2-102.25 | 1 | UNV00014533 | 5-20R 1P 20A 125V GFCI RECEPTACLE |
| PL1-101.14 | 1 | UNV00008710 | 600V 400A MALE CAM LOCK BLUE |
| J1-101.11 | 1 | UNV00013755 | 600V UPTO 400A #2-4/0 AWG RED FEMALE CAM LOCK RECEPTACLE |
| J1-101.14 | 1 | UNV00013756 | 600V UPTO 400A #2-4/0 AWG BLU FEMALE CAM LOCK RECEPTACLE |
| J1-101.17 | 1 | UNV00013758 | 600V UPTO 400A #2-4/0 AWG GRN FEMALE CAM LOCK RECEPTACLE |
| CB1-101.25<br>CB1-101.34<br>CB1-101.43<br>CB2-102.07<br>CB2-102.16 | 5 | UNV00014731 | 2P 250V 50A DIN RAIL MOUNT MCCB UL489 |
| CB2-102.25 | 1 | UNV00017491 | 1P 125V 20A 10KA UL489 DIN RAIL MOUNT BREAKER |
| PD 1<br>PD 2<br>PD 3<br>PD 4 | 4 | UNV00016633 | POWER DISTRIBUTION BLOCK 380A 1-6 OPENING |
| GRND BAR KIT | 1 | UNV00013942C | GROUND BAR KIT |

LARSON ELECTRONICS
9419 E US HWY 175,
KEMP, TX 75143

TITLE: MPD-CS3-CLP6.200AF-YT0-Z-5.CLR6-5.C04-1.N10-M1

| DRAWN BY | DATE | REV |
|---|---|---|
| L.Calib | 01-26-2026 | A |
| CHECKED BY | SHEET # | DRAWING # |
| | 3 OF 3 | 103 |

| REV | DESCRIPTION | DATE |
| --- | --- | --- |
| A | QUOTE | 01/26/2026 |

# MPD-CS3-CLP6.200AF-YT0-Z-5.CLR6-5.C04-1.N10-M1

LARSON ELECTRONICS®

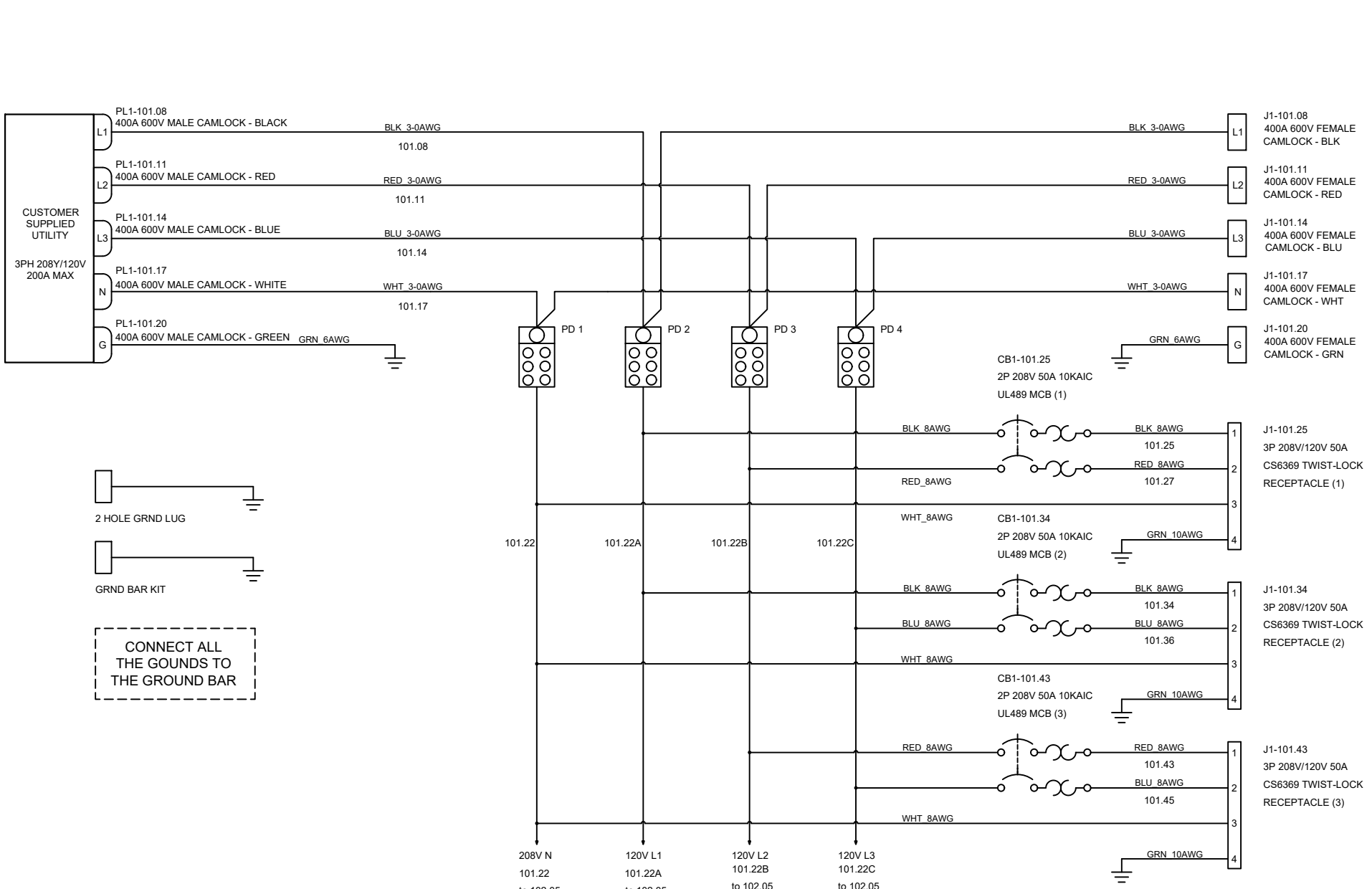


| | | | |
|---|---|---|---|
| LARSON ELECTRONICS<br>9419 E US HWY 175,<br>KEMP, TX 75143 | TITLE: MPD-CS3-CLP6.200AF-YT0-Z-5.CLR6-5.C04-1.N10-M1 | | |
| | DRAWN BY: L.Calib | DATE: 01-26-2026 | REV: A |
| | CHECKED BY: | SHEET #: 1 OF 3 | DRAWING #: 101 |

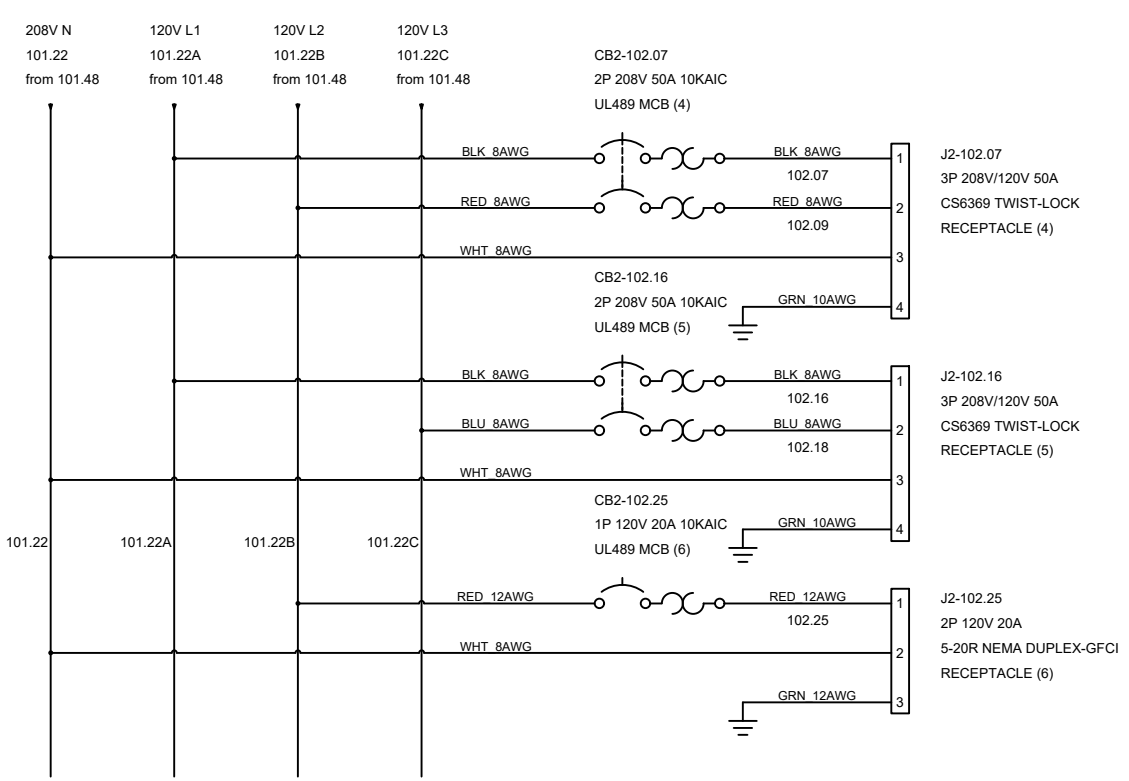


| | | | |
|---|---|---|---|
| LARSON ELECTRONICS<br>9419 E US HWY 175,<br>KEMP, TX 75143 | TITLE: MPD-CS3-CLP6.200AF-YT0-Z-5.CLR6-5.C04-1.N10-M1 | | |
| | DRAWN BY: L.Calib | DATE: 01-26-2026 | REV: A |
| | CHECKED BY: | SHEET #: 2 OF 3 | DRAWING #: 102 |

| TAGS | QTY | CATALOG | DESCRIPTION |
|---|---|---|---|
| J1-101.25<br>J1-101.34<br>J1-101.43<br>J2-102.07<br>J2-102.16 | 5 | UNV00008818 | CS6369 50A 250V 3P RECEPTACLE |
| 2 HOLE GRND LUG | 1 | UNV00007136 | 2 HOLE GROUND LUG |
| PL1-101.17 | 1 | UNV00002290 | 600V 400A MALE CAM LOCK WHITE |
| PL1-101.08 | 1 | UNV00008711 | 600V 400A MALE CAM LOCK BLACK |
| PL1-101.20 | 1 | UNV00008712 | 600V 400A CAM LOCK GREEN |
| PL1-101.11 | 1 | UNV00008715 | 600V 400A MALE CAM LOCK RED |
| J1-101.20 | 1 | UNV00013752 | 600V UPTO 400A #2-4/0 AWG WHT FEMALE CAM LOCK RECEPTACLE |
| J1-101.08 | 1 | UNV00013753 | 600V UPTO 400A #2-4/0 AWG BLK FEMALE CAM LOCK RECEPTACLE |
| J2-102.25 | 1 | UNV00014533 | 5-20R 1P 20A 125V GFCI RECEPTACLE |
| PL1-101.14 | 1 | UNV00008710 | 600V 400A MALE CAM LOCK BLUE |
| J1-101.11 | 1 | UNV00013755 | 600V UPTO 400A #2-4/0 AWG RED FEMALE CAM LOCK RECEPTACLE |
| J1-101.14 | 1 | UNV00013756 | 600V UPTO 400A #2-4/0 AWG BLU FEMALE CAM LOCK RECEPTACLE |
| J1-101.17 | 1 | UNV00013758 | 600V UPTO 400A #2-4/0 AWG GRN FEMALE CAM LOCK RECEPTACLE |
| CB1-101.25<br>CB1-101.34<br>CB1-101.43<br>CB2-102.07<br>CB2-102.16 | 5 | UNV00014731 | 2P 250V 50A DIN RAIL MOUNT MCCB UL489 |
| CB2-102.25 | 1 | UNV00017491 | 1P 125V 20A 10KA UL489 DIN RAIL MOUNT BREAKER |
| PD 1<br>PD 2<br>PD 3<br>PD 4 | 4 | UNV00016633 | POWER DISTRIBUTION BLOCK 380A 1-6 OPENING |
| GRND BAR KIT | 1 | UNV00013942C | GROUND BAR KIT |

LARSON ELECTRONICS
9419 E US HWY 175,
KEMP, TX 75143

TITLE: MPD-CS3-CLP6.200AF-YT0-Z-5.CLR6-5.C04-1.N10-M1

| DRAWN BY | DATE | REV |
|---|---|---|
| L.Calib | 01-26-2026 | A |
| CHECKED BY | SHEET # | DRAWING # |
| | 3 OF 3 | 103 |

# Certification

Manufacturer: Larson Electronics LLC
Address: 9419 US-HWY 175
Kemp, Texas 75143

**Declare the following equipment conforms to the standard(s) as listed:**

Model: MGL, MPD, MGS, WAL Series
Description: Power Distribution Systems

**Evaluated Listings:**

**ETL:** UL 1640 - NEC / United States standards
**ETL:** CAN/CSA-C22.2 No. 14 – CEC / Canada standards

The MGL, MPD, MGS, WAL Series are certified to NEC and CEC standards for power distribution systems. These units are constructed using individual components certified to NEC and CEC standards, and are built to UL 1640 and CAN/CSA C22.2 No 14.

Signed for and on behalf of: Larson Electronics, LLC
Place of issue: Kemp, TX
Date of issue: September 11, 2019

Signature: James Thomas

Name: James Thomas
Position: Operations Manager


LARSON ELECTRONICS LLC • 9419 E US HWY 175 • KEMP, TX 75143
p: 1-800-369-6671 • intl: 903-498-3363 • f: 903-498-3364 • sales@larsonelectronics.com

# TECHNICAL INFORMATION

**POWDURA® POLYESTER TGIC**
**POWDER COATING**

## PRODUCT DESCRIPTION

**PLR2-60002**
**RAL 5010 GENT BLUE**

**POWDURA® Polyester TGIC Powder Coatings** are recommended for a broad range of interior/exterior functional and decorative applications.

**Advantages:**

- Provides excellent overbake resistance
- Good chemical resistance
- Very good outdoor exposure qualities
- Wide range of special effects available
- Available in a broad range of colors

Many applications, including:
Steel Furniture
Refrigeration
Electronic Cabinetry
Scaffolding
Electrical Equipment
Instrument Housings

Appliances
Sporting Goods

**Storage:** Powdura® Powder Coatings should be kept in a dry and cool area at temperatures below 80°F (27°C). When not in use, store powder in sealed containers: fine powders are hygroscopic.

**Substrate Preparation:** Substrate should be free of grease, oil, dirt, fingerprints, drawing compounds, any contamination, and surface preparation treatments to ensure optimum adhesion and coating performance properties. The use of a chemical conversion coating prior to the application of a powder coating is strongly recommended.

**Testing:** Due to the wide variety of substrates, surface preparation methods, application methods, and environments, the customer should test the complete system for adhesion, compatibility and performance prior to full-scale application.

## CAUTIONS

Thoroughly review product SDS prior to using this product. Please consult your local sales representative or your local Sherwin-Williams facility for additional information.

**Special Advisory:** River texture type finishes are unique finishes that may vary with application, film thickness and cure conditions. Light colors and very dark colors may occasionally show colored specks that appear as contamination. This is the nature of this type of finish and cannot be predicted or controlled. Thorough cleaning is required when switching to a normal smooth powder coating to prevent craters in the smooth finish.

## APPLICATION

| | |
|---|---|
| **Cure Schedule:** | 10 MIN @ 400F |
| **Film Thickness Range**(mils): | 3.0-5.0 |

## ATTRIBUTES

| | |
|---|---|
| **Specific Gravity**(g/ml): | 1.72 |
| **Coverage at 1.0 Mil**($ft^2$/lb): | 112.4 |
| **60° Gloss:** (ASTM D-523) | 15-30 |
| **Adhesion:** (ASTM D-3359) | 5B |
| **Flexibility:** (ASTM D-522) | Pass 1/8" |
| **Pencil Hardness:** (ASTM D-3363) | H-2H |
| **Impact Resistance**(in.lb): (ASTM D-2794) | Dir 100 in-lbs<br>Rev 100 in-lbs |

**Note:** Performance measured using 24-gauge Bonderite® 1000 test panels.

| | |
|---|---|
| **Shelf Life:** | 12 Months |

Sherwin-Williams recommends that all material be used in FIFO order ( first in - first out). Materials that exceed the recommended shelf life should be tested prior to use.

**Note:**
Product Data Sheets are periodically updated to reflect new information relating to the product. It is important that the customer obtain the most recent Product Data Sheet for the product being used. The information, rating and opinions stated above pertain to the material currently offered and represent the results of tests believed to be reliable. However, due to variations in customer handling and methods of application, which are not known, or under our control, The Sherwin-Williams Company cannot make any warranties or guaranties as to the end results.

08 00

Grove City Product Mod

24-Mar-2020

# Material Safety Data Sheet

To Whom It May Concern,

Larson Electronics LLC MGL, MPD, MGS, WAL Series industrial line of portable power distribution systems are considered "ARTICLES" under 29 CFR 1910-1200, the OSHA Hazard Communication Standard, and do not require a Material Safety Data Sheet (MSDS).

Articles are specifically exempt from the regulations of this standard. OSHA defines an article as follows:

1910-1200(c) – Article means a manufactured item other than a fluid or particle:

i. Which is formed to a specific shape or design during manufacture;
ii. Which has end use function(s) dependent in whole or in part upon its shape or design during end use; and
iii. Which under normal conditions does not release more than very small quantities.

Regards,

Ray Smith
Larson Electronics, LLC.



LARSON ELECTRONICS LLC • 9419 E US HWY 175 • KEMP, TX 75143
p: 1-800-369-6671 • intl: 903-498-3363 • f: 903-498-3364 • sales@larsonelectronics.com

<- Back

## Product Description

| | |
|---|---|
| **Title:** | STAGE & STUDIO PORTABLE WIRING COMPARTMENTS |
| **Company:** | LARSON ELECTRONICS LLC - Kemp, TX USA |
| **Product Information:** | Power Distribution System, Model Nos. MGL, MPD, MGS, WAL series; Followed by AAK-PBB.FFF-SCC.GGG-EEXCCC.DDD; Where AA = 2,3,5,7,9,15,20,25,30,45,50,75; BB = 1P, 3P; FFF = 480,240,208,120; CC = 1P,3P; GGG = 480,240,208,120; EE = # of outlets; CCC = voltage; DDD = outlet amperage. |
| **Evaluated to the following:** | A representative sample of the listed devices have been tested, investigated and found to comply with the requirements of the Standard(s) for Stage & Studio Portable Wiring Compartments (UL-1640) and are identified with the ETL Listed Mark. |

<- Back

**Contact Us**

Americas+1-888-347-5478
(or +1-312-906-7801)
Email
dirlist@intertek.com

Intertek Home
Product Directories

**Inspector Center**

Get up-to-date information on everything from our Accreditations to our Certifications and Marks. Learn more...

**News**

Intertek Unveils New Design for Product Safety and Quality Certification Marks. Learn more...

© 2010 Intertek All Rights Reserved.
All other product or service names are the property of their respective owners.

intertek
Total Quality. Assured.




<- Back

## Product Description

| | |
|---|---|
| **Title:** | INDUSTRIAL CONTROL EQUIPMENT |
| **Company:** | LARSON ELECTRONICS LLC - Kemp, TX USA |
| **Product Information:** | Industrial Control Panels For General Use.<br><br>Power Distribution System, Model Nos. MGL, MPD, MGS series; Followed by AAK-PBB.FFF-SCC.GGG-EEXCCC.DDD; Where AA = 2,3,5,7,9,15,20,25,30,45,50,75; BB = 1P, 3P; FFF = 480,240,208,120; CC = 1P,3P; GGG = 480,240,208,120; EE = # of outlets; CCC = voltage; DDD = outlet amperage. |
| **Evaluated to the following:** | A representative sample of the listed devices have been tested, investigated and found to comply with the requirements of the Standard(s) for Industrial Control Equipment (CAN/CSA-C22.2 No. 14) and are identified with the cETL Listed Mark. |

<- Back

### Contact Us

ETL listed products that are in doubt or for products that do not appear in the directory, please request a verification of certification.
Americas+1-888-347-5478 (or +1-847-660-7407)
Email
etldirectory@intertek.com

Intertek Home
Product Directories
DLP on mobile devices

### Inspector Center

Get up-to-date information on everything from our Accreditations to our Certifications and Marks. Learn more...

### News

Intertek Unveils New Design for Product Safety and Quality Certification Marks. Learn more...

© 2010 Intertek All Rights Reserved.
All other product or service names are the property of their respective owners.

# Certification

Manufacturer: Larson Electronics LLC
Address: 9419 US-HWY 175
Kemp, Texas 75143

**Declare the following equipment conforms to the standard(s) as listed:**

Model: MGL, MPD, MGS, WAL Series
Description: Power Distribution Systems

The MGL, MPD, MGS, WAL series complies with the below standards set forth by the listed Association's requirements. Purchased and manufactured components are evaluated to Larson Electronics LLC Quality Control Management system per ISO 9001:2015. This certification applies to all specimens manufactured in accordance to the manufacture's drawings.

**Evaluated Standards:**

**AISC:** Structural steel skid design
**NFPA 70:** National Electrical Code
**ASTM A36:** Standard Specification for Carbon Structural Steel
**ASTM A123:** Standard Specification for Zinc (Hot-Dip Galvanized) Coatings on Iron and Steel Products
**ASTM A153:** Standard Specification for Zinc Coating (Hot-Dip) on Iron and Steel Hardware
**ASTM A489:** Standard Specification for Carbon Steel Lifting Eyes
**ASTM A502:** Standard Specification for Rivets, Steel, Structural
**ASTM A563:** Standard Specification for Carbon and Alloy Steel Nuts
**ASTM A500:** Standard Specification for Cold-Formed Welded and Seamless Carbon Steel Structural Tubing in Rounds and Shapes
**ASTM B172:** Standard Specification for Rope-Lay-Stranded Copper Conductors Having Bunch-Stranded Members, for Electrical Conductors
**ASTM D7803:** Standard Practice for Preparation of Zinc (Hot-Dip Galvanized) Coated Iron and Steel Product and Hardware Surfaces for Powder Coating
**SAE J429:** Mechanical and Material Requirements for Externally Threaded Fasteners
**AWS D1.1:** Structural Welding – Steel
**ICEA S-58-679:** Standard for Control, Instrumentation and Thermocouple Extension Conductor Identification
**ICEA S-75-381:** Portable and Power Feeder Cables for Use in Mines and Similar Applications
**NEMA OFP 1-2017:** Protection of Receptacle Outlets in Wet Locations According to the National Electrical Code


LARSON ELECTRONICS LLC • 9419 E US HWY 175 • KEMP, TX 75143
p: 1-800-369-6671 • intl: 903-498-3363 • f: 903-498-3364 • sales@larsonelectronics.com

**NEMA PB 1-2011:** Panelboards
**NEMA ST 20-2014:** Dry Type Transformers for General Applications
**NEMA WD 1-1999 (R2015):** General Color Requirements for Wiring Devices
**ANSI C80.1-2015:** American National Standard for Electric Rigid Steel Conduit
**ANSI C119.4-2016:** American National Standard for Electric Connectors
**ANSI Z535.4-2011:** American National Standard for Product Safety Signs and Labels
**ANSI/IEC 60529-2004 (R2011):** American National Standard for Degrees of Protection Provided by Enclosures (IP Code)

Signed for and on behalf of: Larson Electronics, LLC
Place of issue: Kemp, TX

Signature: James Thomas

Name: James Thomas
Position: Operations Manager


LARSON ELECTRONICS LLC • 9419 E US HWY 175 • KEMP, TX 75143
p: 1-800-369-6671 • intl: 903-498-3363 • f: 903-498-3364 • sales@larsonelectronics.com

# Certification

Manufacturer: Larson Electronics LLC
Address: 9419 US-HWY 175
Kemp, Texas 75143

**Declare the following equipment conforms to the standard(s) as listed:**

Model: MGL, MPD, MGS, WAL Series
Description: Power Distribution Systems

**Evaluated Listings:**

**CE:** DIRECTIVE 2014/35/EU - LOW VOLTAGE DIRECTIVE
**CE:** DIRECTIVE 2014/30/EU - EMC DIRECTIVE
**CE:** Regulation (EC) No 1907/2006 - REACH REGULATION
**CE:** DIRECTIVE 2015/863/EU - ROHS DIRECTIVE

The MGL, MPD, MGS, WAL series complies with the essential protection requirements of the European Parliament of the Council Directive for Low Voltage Directive, EMC Directive, REACH Regulation, and RoHS Directive. This certification applies to all specimens manufactured in accordance to the manufacture's drawings.

Signed for and on behalf of: Larson Electronics, LLC
Place of issue: Kemp, TX

Signature: James Thomas

Name: James Thomas
Position: Operations Manager


LARSON ELECTRONICS LLC • 9419 E US HWY 175 • KEMP, TX 75143
p: 1-800-369-6671 • intl: 903-498-3363 • f: 903-498-3364 • sales@larsonelectronics.com

# Certification

Manufacturer: Larson Electronics LLC
Address: 9419 US-HWY 175
Kemp, Texas 75143

**Declare the following equipment conforms to the standard(s) as listed:**

Model: MGL, MPD, MGS, WAL Series
Description: Power Distribution Systems

**Evaluated Listings:**

**CE:** Regulation (EC) No 1907/2006 - REACH REGULATION
**CE:** DIRECTIVE 2015/863/EU - ROHS DIRECTIVE

This is to certify that products offered by Larson Electronics LLC comply with the Reduction of Hazardous Substances (RoHS) directives. Directive 2002/95/EC became effective on 1 July 2006. It restricts the use of six substances in the manufacture of electrical and electronic equipment. This directive was revised in June 2011 and is now referred to as directive 2011/65/EU. Directive 2015/863/EU amending Annex II to Directive 2011/65/EU announced plans to add four substances from 22 July 2019.

We hereby certify that the equipment specified above conforms to the Directive(s) by containing less of the restricted substances than the stated limits.

Signed for and on behalf of: Larson Electronics, LLC
Place of issue: Kemp, TX

Signature: James Thomas

Name: James Thomas
Position: Operations Manager



LARSON ELECTRONICS LLC • 9419 E US HWY 175 • KEMP, TX 75143
p: 1-800-369-6671 • intl: 903-498-3363 • f: 903-498-3364 • sales@larsonelectronics.com

# Certification

Manufacturer: Larson Electronics LLC
Address: 9419 US-HWY 175
Kemp, Texas 75143

**Declare the following equipment conforms to the standard(s) as listed:**

Model: MGL, MPD, MGS, WAL Series
Description: Power Distribution Systems

**Evaluated Listings:**

**CE:** Regulation (EC) No 1907/2006 - REACH REGULATION

This letter establishes the opinion of Larson Electronics LLC regarding the status, under the current European Union (“EU”) Regulations on Registration, Evaluation, Authorization, and Restriction of Chemical Substances (“REACH”).

REACH does not apply to manufactured products which are referred to as “completed articles”. Substances (chemicals) are subject to REACH registration, NOT products.

In addition, Articles are exempt from the REACH requirements if (a) the Article does not contain a substance of very high concern or candidate substance in an amount exceeding 0.1% weight by weight, and (b) if substances present in the Article in excess of 1 ton per year per importer are not expected nor intended to be released.

Based on communication with our raw material suppliers, we conclude that to the best of our knowledge our products requiring REACH compliance do not contain any of the currently listed SVHC in concentrations of 0.1% or above.

Accordingly, we foresee no registration or pre-registration requirement for the products we supply.

Signed for and on behalf of: Larson Electronics, LLC
Place of issue: Kemp, TX

Signature: James Thomas

Name: James Thomas
Position: Operations Manager


LARSON ELECTRONICS LLC • 9419 E US HWY 175 • KEMP, TX 75143
p: 1-800-369-6671 • intl: 903-498-3363 • f: 903-498-3364 • sales@larsonelectronics.com

Larson Electronics LLC
9419 E US HWY 175, Kemp, TX 75143
Phone: 800.369.6671

www.LarsonElectronics.com
Email: sales@LarsonElectronics.com
Fax: 903.765.7664

# Frequently Asked Questions (FAQ)

There are no Faqs