Larson Electronics LLC
9419 E US HWY 175, Kemp, TX 75143
Phone: 800.369.6671

www.LarsonElectronics.com
Email: sales@LarsonElectronics.com
Fax: 903.765.7664

MT-BBT-288V-277V-21.91A

1-Phase Buck/Boost Step-Down Transformer - 288V Primary - 277V Secondary - 21.91 Amps - 50/60Hz

Product ID: 330398

Image: MT-BBT-288V-277V-21.91A

Larson Electronics LLC manufactures a wide variety of products, including custom built to spec designs. The pictures displayed for this unit are a general representation of form factor for the product line and may not accurately represent this exact configuration in every detail due to custom builds and changes between similar products in our standard catalog. The specifics for this configuration are listed in the specification table and supporting documentation (CAD files, Dimensional Drawing, Name Plate Diagram, Wiring Diagram, etc.). This means that specific details (receptacles, plugs, wires, connections, mounting brackets, external finishes, etc.) may not be accurately represented in images vs specifications. Please review specifications and do not order based solely on images.

MT-BBT-288V-277V-21.91A Buck and Boost Step-Down Transformer

Transformer Type: Buck/Boost Step-Down Autotransformer
Phase: Single Phase
Frequency: 50/60 Hz
Input Voltage: 288 V
Primary Amps: 21.07 A @ 288 V
Primary Configuration: Two Winding
kVA: 6.06
Output Voltage: 277 V
Secondary Amps: 21.91 A @ 277 V
Voltage Difference: 96%
Winding Material: Aluminum
Knockouts: Side and Rear
Primary Termination: Front Access Copper Tabs or Lead Wires
Secondary Termination: Front Access Copper Tabs or Lead Wires
Cooling: Air / Dry Type
Insulation: 180°C
Temperature Rise: 115°C
Sound Level: 36 dB
Enclosure Rating: NEMA 3R
Encapsulation: Silica Sand & Resin Compounds
Enclosure Material: Steel
Finish: ANSI 61 Grey Finish
Mounting: Wall Mount Via Mounting Tabs
Dimensions: 9.30"H x 5.06"W x 4.56"D
Weight: 15 lb

Ratings

Listed for United States and Canada
NEMA 3R Indoor/Outdoor Enclosure
Meets or Exceeds NEMA ST-20 Standards
Buck and Boost Step-Down Transformer

Special Orders - Special Requirements

Contact us for special requirements
Toll Free: 1-800-369-6671
Intl: 1-903-270-1187
E-mail: sales@larsonelectronics.com

Larson Electronics LLC
9419 E US HWY 175, Kemp, TX 75143
Phone: 800.369.6671

www.LarsonElectronics.com
Email: sales@LarsonElectronics.com
Fax: 903.765.7664

The MT-BBT-288V-277V-21.91A Single Phase Step-Down Buck and Boost Transformer from Larson Electronics is powerful, reliable and designed with the environment in mind. Suitable for both indoor and outdoor applications, the MT-BBT-288V-277V-21.91A provides increased reliability, higher efficiency, protection against critical equipment failures and an extra level of protection by isolating the power source from the connected device. The lower operating costs, lower heat emissions and lower cost of ownership make this transformer ideal for a wide range of applications and businesses.

PLEASE NOTE: ANY FREE SHIPPING OFFERS DO NOT APPLY TO POWER DISTRIBUTION PANELS, TRANSFORMERS, OR SUBSTATIONS

Transformer Features: The MT-BBT-288V-277V-21.91A buck and boost transformer is a single phase unit with a 6.06 kVA rating and a primary voltage of 288 V using a maximum of 21.07 amps on the primary side. This step-down transformer has a secondary voltage of 277 V and provides up to 21.91 amps available on the secondary side. Featuring robust construction, this unit's cores are manufactured with non-aging, cold-rolled silicon steel laminations using state of the art technology.

This unit boasts a low cost of ownership and is highly energy efficient. Lower heat emissions mean less cooling is needed as well. The NEMA 3R painted steel enclosure makes the unit suitable for both indoor and outdoor applications, and this step-down transformer can be wall mounted. The MT-BBT-288V-277V-21.91A features a 180°C insulation with a 115°C temperature rise.

Construction: The aluminum winding in the MT-BBT-288V-277V-21.91A are formed from high quality aluminum wire help to improve performance. The close tolerances used during manufacturing also eliminates burrs which hinder performance. Each core is specially coated to prevent the ingress of moisture and are electrically balanced to minimize axial forces during short circuit situations. Buck and boost transformers are designed to maximize the performance and life of electrical equipment. The MT-BBT-288V-277V-21.91A is encapsulated in silica sand and resin, and cased in a NEMA 3R steel enclosure. NEMA 4, NEMA 4X, and NEMA 12 enclosures are available upon request.

Click Image to Enlarge

Benefits: The MT-BBT-288V-277V-21.91A buck/boost step-down transformer offers many benefits to the consumer. Buck/boost transformers pass the majority of the load voltage directly through the transformer, only transforming a small percentage of the load. Due to this technology, a smaller and quieter step-down transformer is manufactured and uses less materials. This provides owners with significant energy savings as well as offering

environmental benefits.

Higher efficiency not only extends the life of the transformer, but also turn into cost savings for owners in the form of lower energy bills and decreased cost of ownership. Installation and maintenance costs are reduced due to the smaller form factor, and less overall space requirements are decreased. In addition, these step-down transformers operate quieter than a standard autotransformer of the same capacity.

Mounting: Integrated wall mounting brackets make installation fast and easy. Because of the smaller overall footprint, heavy machinery is rarely needed for mounting and installation.

Installation: Installation is simple. Connect the primary leads and secondary leads to the step-down transformer per the provided wiring diagram. Knockout hubs on either side and the bottom of the transformer allow for easy line-in and line-out wiring.

Applications: Air conditioners, lighting systems, heating elements, motor applications and other applications that that require the ability to power loads that differ from the available line voltage.

Limitations: While there are many benefits to a buck/boost transformer, there are some limitations to consider. This transformer will only transformer voltage, it will not convert phases, it will not create even legs between line 1 and line 2 (L1 and L2 WILL be UNEVEN), has no circuit isolation, and does not create a neutral for applications where a neutral is not already present. If any of these limitations apply to you, you will need a standard transformer. Please see below link for our standard line of industrial transformers or our line of phase converters.

Note on Voltage Generation: Buck/boost transformers, like this unit, do NOT generate even legs of voltage on the secondary side. The generate voltage legs will always be unbalanced. This is acceptable for some situations, but other situations call for even legs on the secondary side. This simply cannot be achieved with a buck/boost transformer.

If your specific situation requires even legs of voltage on the secondary side, you will have to consider either a split phase buck/boost transformer or a standard industrial transformer. Larson Electronics has a wide range of both available for purchase:

Split Phase Buck/Boost Transformers

Standard Industrial Transformers

Note on Phases: This buck/boost transformer is a single phase step-down transformer. For three phase transformers, click on the following links:

Three Phase Delta Buck/Boost Transformers

Three Phase Wye Buck/Boost Transformers

Larson Electronics is a manufacturer and as such can build stationary and portable transformer systems to your specifications. Although we carry several models of power

distribution transformer systems, we can deliver custom ordered units almost as quickly as our prebuilt units. If this model does not meet your needs, please contact us at 1-800-369-6671 or sales@larsonelectronics.com to discuss your specific requirements.

SINGLE PHASE BUCK & BOOST TRANSFORMERS INSTRUCTION MANUAL

This manual applies to all single-phase buck & boost transformers sold by Larson Electronics. ***Please refer to the connection diagram on pages 4-6 for properly connecting the transformer.***

Warning: Do not attempt installation until you are familiar with all warnings, precautions, and procedures outlined within this instruction sheet. We strongly encourage only a licensed electrician install, operate and maintain this product.

Precautions:

- Do not handle this transformer without proper equipment and experienced personnel.
- Fully inspect the transformer before installation.
- Use appropriate electrical terminals with flexible connectors.
- Connections should be in accordance with nameplate drawings or attached wiring diagrams.
- Disconnect all live power before installing and maintaining the transformer.
- Do not change any connections while the transformer is energized.
- Secure all ground connections before energizing the transformer.

After receiving the transformer, immediately inspect each unit for damage that could have resulted from transit. Check to ensure the specs on the transformer match the shipping documents. A claim should be filed with the carrier if any shipping damage is noted. These details with all relevant information should also be forwarded to Larson Electronics.

Use appropriate measures and experienced personnel for transporting the transformer relative to its size. Never attempt to lift the transformer without proper equipment. Lifting tabs are included on larger transformers to help ease transportation.

All MT-BBT Buck-Boost transformers are NEMA 3R rated, suitable for both indoor and outdoor installations. Follow appropriate electrical codes for cable installation and use suitable hardware for outdoor installations, such as water tight couplings at each knockout.

The transformer must be installed in an upright position on surfaces capable of supporting its weight. If installed outdoors, orient the unit vertically with the wiring compartment down to prevent the ingress of moisture.

Mounting the Transformer (refer to page 7)

1. Choose a non-combustible surface for installing the transformer. This location must allow air flow around the transformer for cooling purposes.
2. Pre-drill the top two mounting holes on your mounting surface. (refer to mounting table on page 7)
3. With assistance, lift the transformer over the pre-drilled mounting holes and install the top two mounting bolts. Use appropriate equipment and lifting tabs for large transformers.
4. Level the unit and find the lower mounting hole(s) within the wiring compartment.
5. Drill out and install the lower mounting bolt(s) into the mounting surface.
6. In order to provide NEMA 3R protection, the unit must be mounted vertically with the mounting tabs facing up.

Ventilation

Transformers are required to maintain free air flow around the unit for cooling purposes. The location should maintain an average ambient temperature of 86°F (30°C) and should not exceed 104°F (40°C) at any time. Proper ventilation is essential for transformers to meet their kVA capability. General purpose transformers should be located at least 2 inches for 10kVA and 4 inches for units over 10kVA from the surface to maintain adequate air circulation.

Accessibility

Due to NEC standards, it is required for transformers to be accessible for inspection and located accordingly. Exposed passage ways where people could be exposed to live parts during inspection should be avoided.

Sound Levels

By nature, transformers emit sound frequencies due to their electrically energized components. Care should be exercised when selecting a location to avoid sensitive areas such as in schools, hospitals, and office facilities. The sound levels produced by these transformers are required to meet NEMA standards. The sound level can vary from 40 to 60 DB. Acoustically absorbing materials could be considered for surrounding walls and ceilings.

Wire Connections

1. Loosen the cover screw on the front to open the wiring compartment.
2. Ensure terminals are clean. Use the included lugs and bolts for terminal wiring where applicable. Use wire nuts or similar for all other electrical connections.
3. Make the required electrical connections per the wire diagram on pages 4-6. This includes input and output connections, as well as ground(s).
4. If any unused wire leads remain, insulate with a wire nut and electrical tape.
5. Inspect all connections and close the wiring compartment. Secure the cover screw.

Proper cable size is selected based on the line current rating of the transformers primary and secondary sides. Pre-punched knockouts are provided to help facilitate cable entry.

Ground

Grounding should be done in accordance with national electrical code standards. Securely grounding the transformer should be done as a safety precaution.

For safe and proper operation of the transformer, we recommend the following items be checked for completeness:

- ☐ Insulation resistance: enclosure to primary, enclosure to secondary and primary to secondary should be greater than 10k ohms.
- ☐ Output voltage: measure and verify that the transformer outputs the correct voltage in accordance with nameplate specifications. Voltage may vary depending on actual power available at your facility.
- ☐ Phase connections: refer to the nameplate diagram to ensure correct phase connections.
- ☐ When windings are connected in parallel (in the case of dual voltage primaries), the primary taps for all coils must be connected to the identical percentage tap positions to avoid the shorting of turns. For tap positions, refer to the transformer nameplate.

- ☐ Grounding: check to ensure the enclosure is grounded with the appropriately sized conductor.
- ☐ Connections: check all electrical connections for proper clearance and tightness.
- ☐ Care must be taken to ensure the neutral current does not exceed ½ of the transformers kVA rating for single phase, 3-wire 240/120 volt loads.

Operation

For relatively normal clean installations, MT-BBT transformers will operate satisfactory under normal loads. Fully loaded transformers may be warm to the touch. Normal loading standards permit the enclosure to be 149°F (65°C) over ambient temperatures. MT-BBT transformers are designed to operate continuously at their full kVA rating.

ANSI C57.96 provides guidance for loading transformers under different conditions including:

- ➔ Varying ambient temperatures that are different from the ambient temperatures required for transformer operation.
- ➔ Short time overload as it relates to time and temperature and the corresponding loss of life of the transformer.
- ➔ Overload that results in the reduction of transformer life expectancy.

If the transformer is experiencing increased temperatures, the following load characteristics should be considered immediately:

- ➔ Rigorous motor starting loads or other impact type loading for which a specific transformer for that application is required.
- ➔ Over-excitation of the unit due to excess supply line voltage or current.
- ➔ Ambient temperatures above standard.
- ➔ Overload beyond ANSI C57.96 guidelines.
- ➔ Harmonic distortions of the supply line voltage and currents.

Maintenance:

Under normal operating conditions, MT-BBT transformers do not require maintenance. However, periodic care and inspection is good practice, particularly in extreme environmental conditions.

External inspection and removal of dust and dirt may be carried out while the transformer is in operation. However, access covers must not be open while energized.

The accumulation of dust and dirt will affect cooling of the transformer causing a potential fire hazard. Ice or snow will not adversely affect the operation of the transformer.

Warning: Do not perform internal maintenance without first de-energizing the transformer! The transformer must be isolated and the terminals grounded. Check all ground connections to ensure a low impedance connection.

Connection Diagram (Refer to the diagrams below for connecting the transformer. Choose the type that resembles your transformer.)

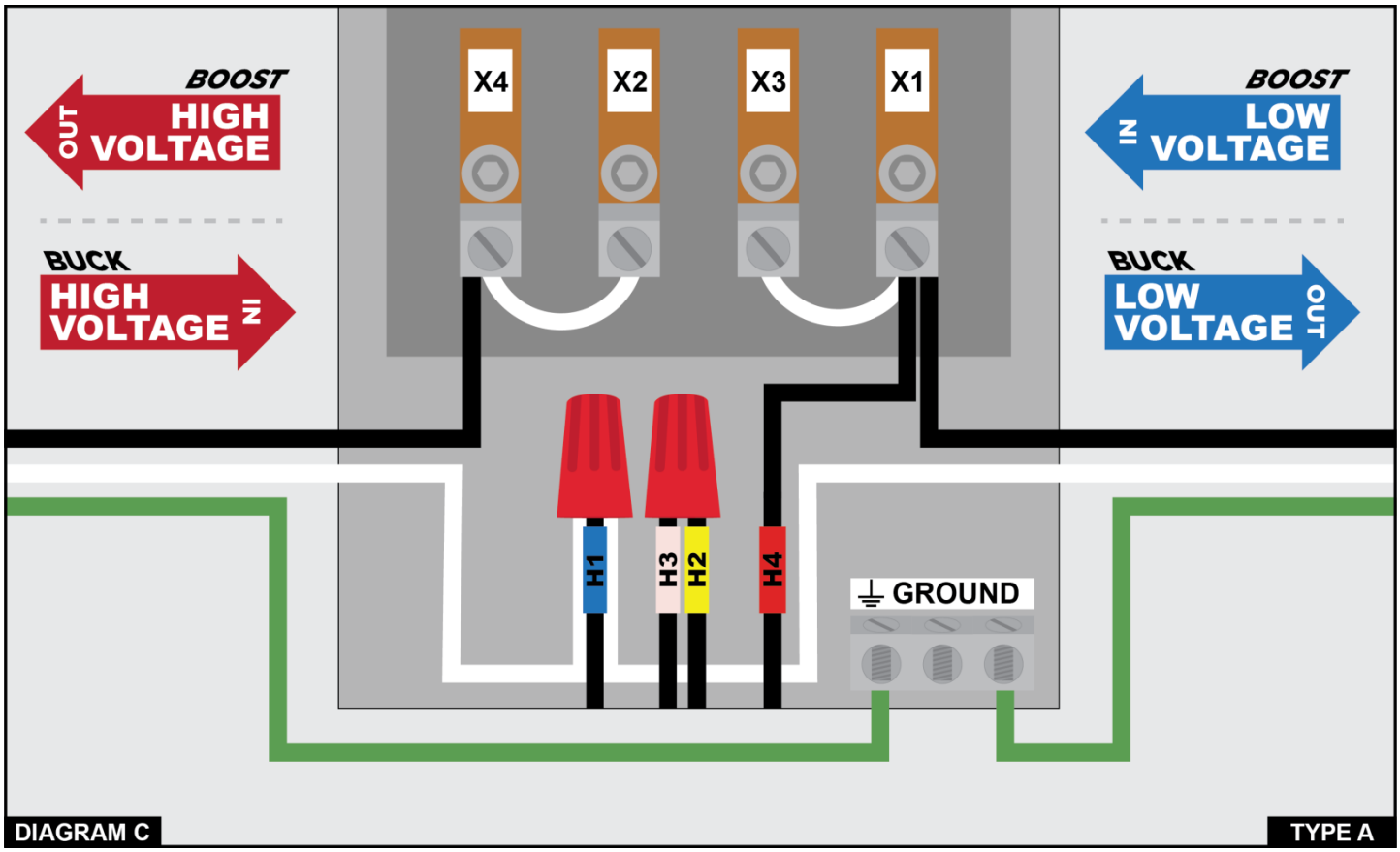

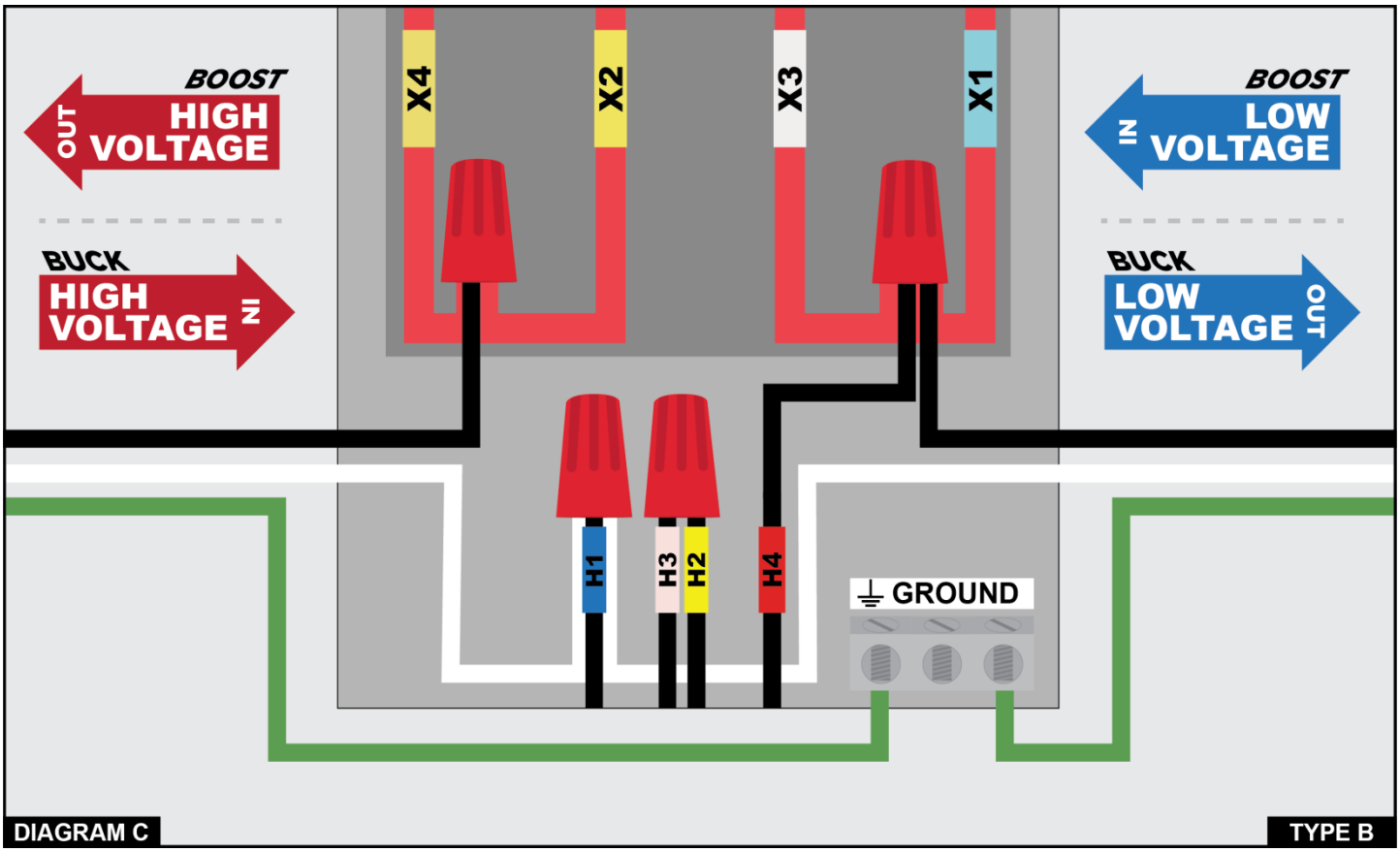

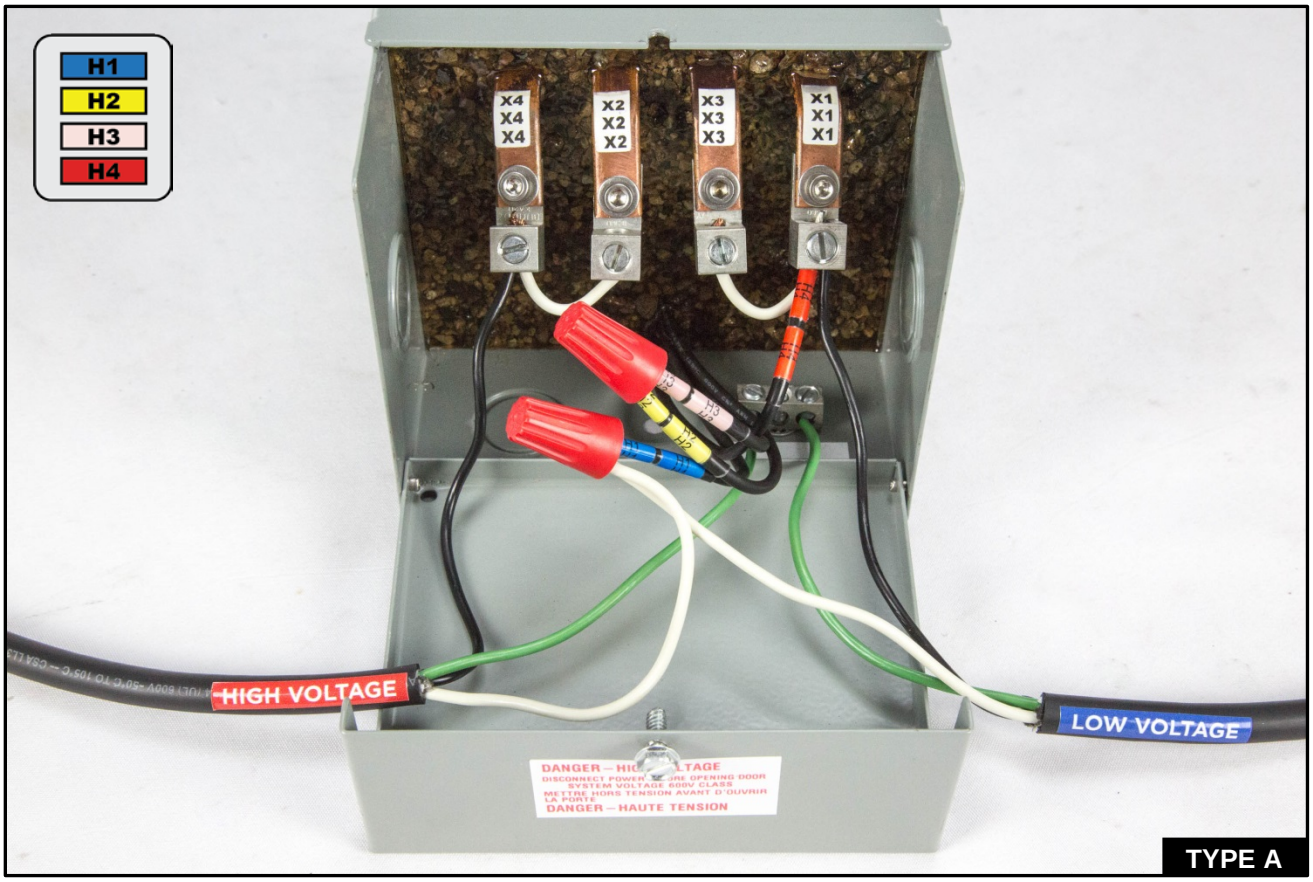
H1
H2
H3
H4
X4 X4 X4
X2 X2 X2
X3 X3 X3
X1 X1 X1
HIGH VOLTAGE
LOW VOLTAGE
DANGER – HAUTE TENSION

TYPE A

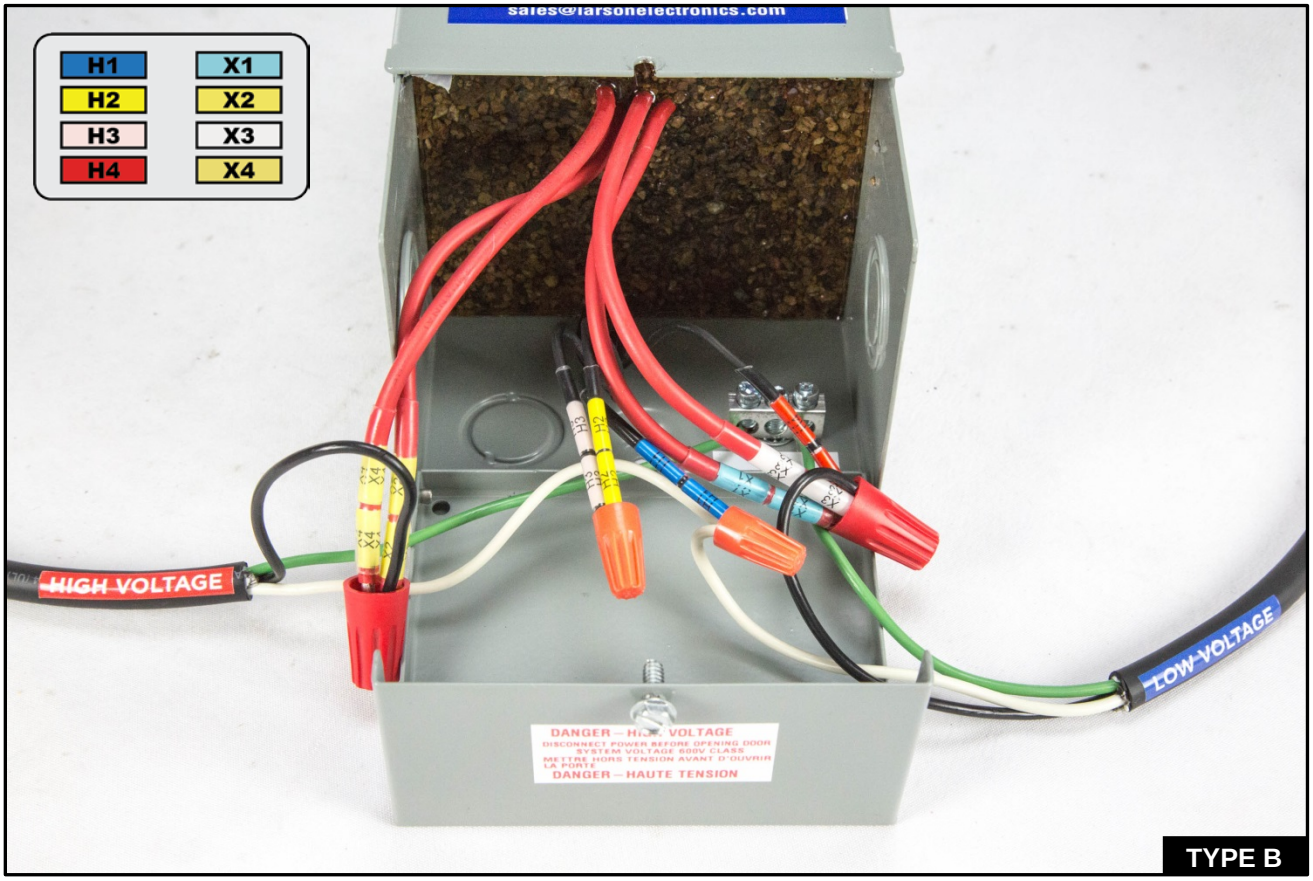
sales@larsonelectronics.com
H1
H2
H3
H4
X1
X2
X3
X4
HIGH VOLTAGE
LOW VOLTAGE
DANGER – HAUTE TENSION

TYPE B

Wiring Diagram

WARNING: *DO NOT SERVICE WHILE ENERGIZED!* ***Tip: Use a voltmeter to check voltage!***

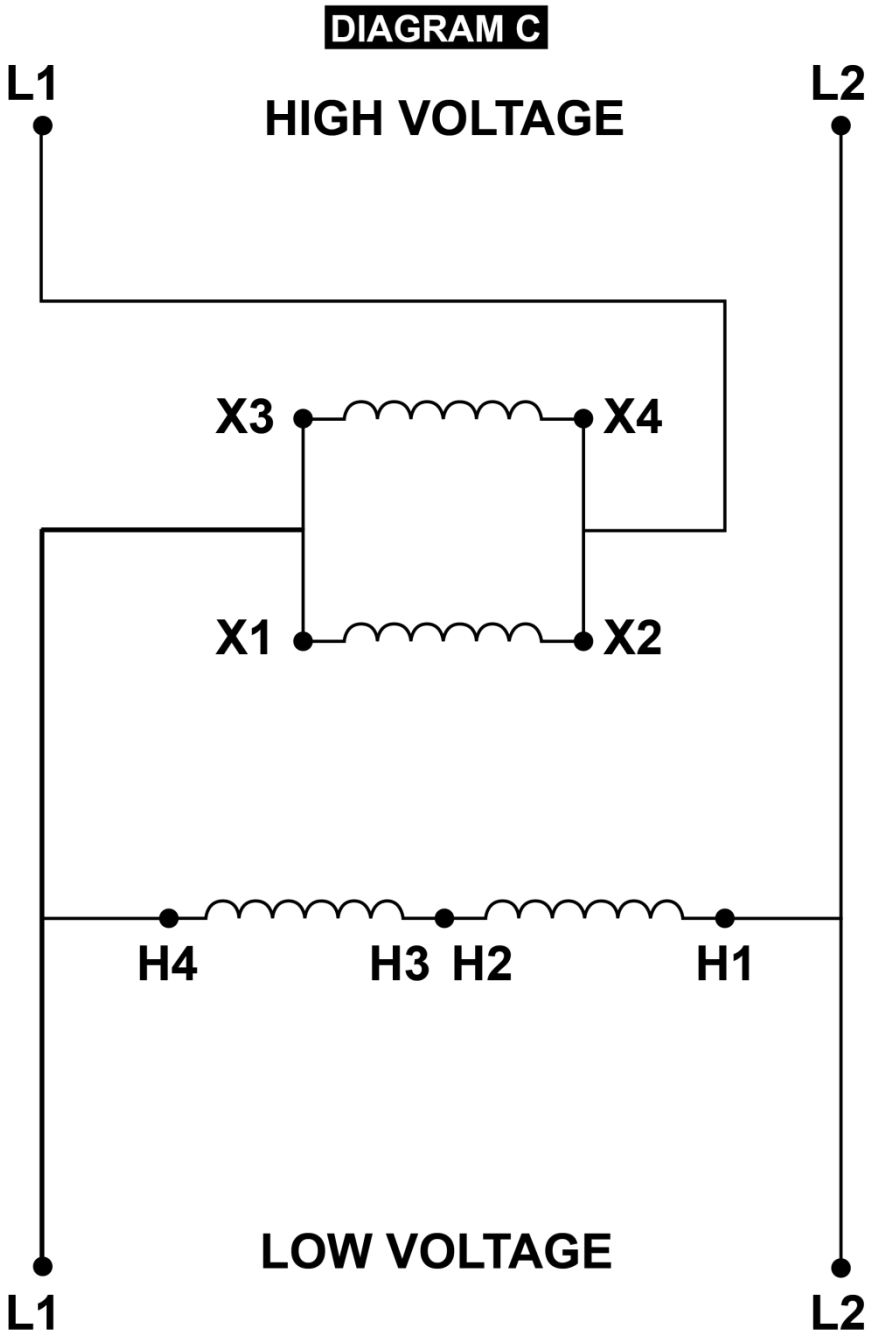

Connection Guide:

1. Connect **X4** and **X2** together
2. Connect **X3** and **X1** together
3. Connect High Voltage **L1** to **X4, X2**
4. Connect Low Voltage **L1** to **X1, X3, H4**
5. Connect **H3** and **H2** together
6. Connect High & Low Voltage **L2** to **H1**

STANDARD MODELS:

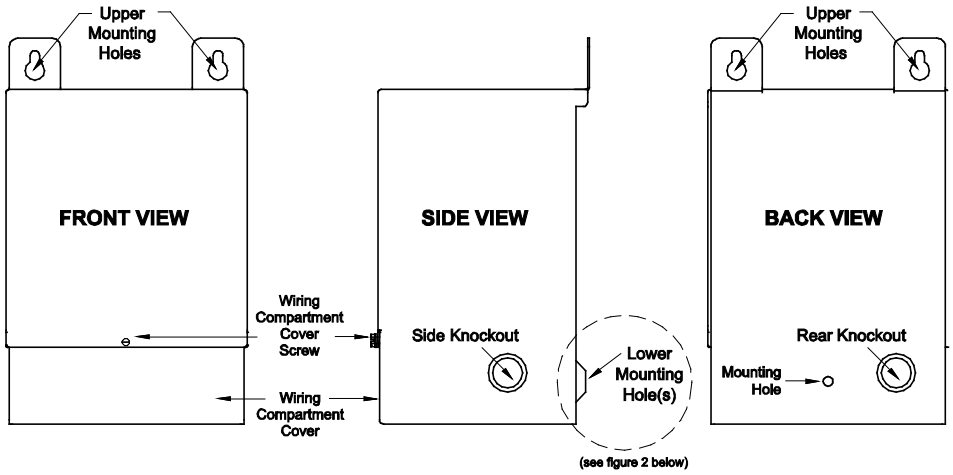

MODELS WITH LIFTING TABS:

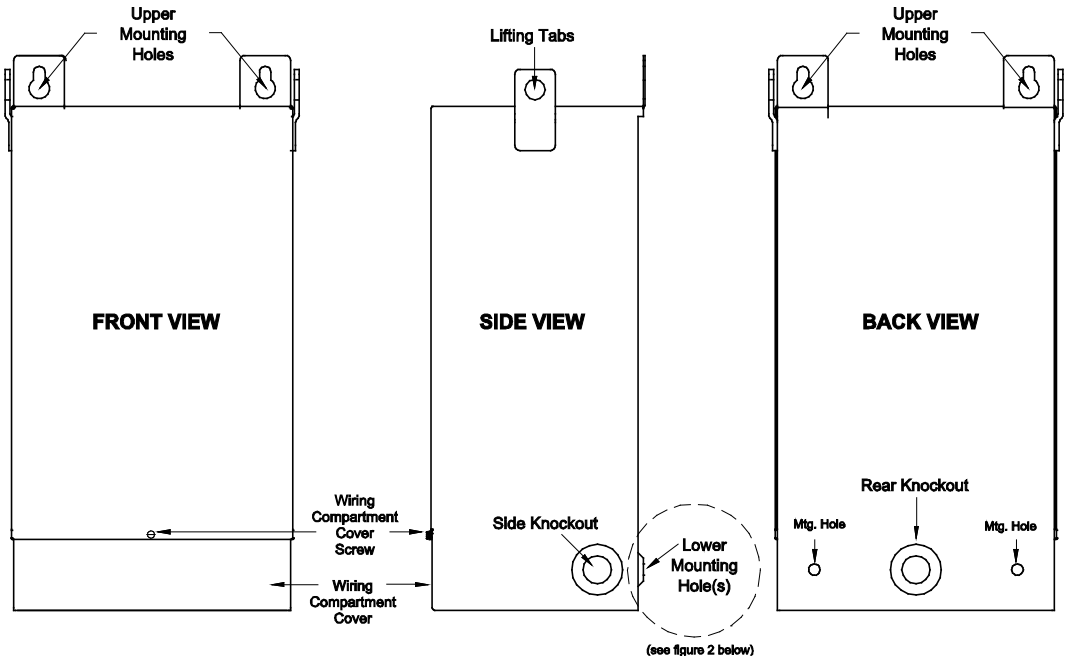

FIGURE 2: Lower wiring compartment mounting hole(s), mounting hardware installation assembly diagram.

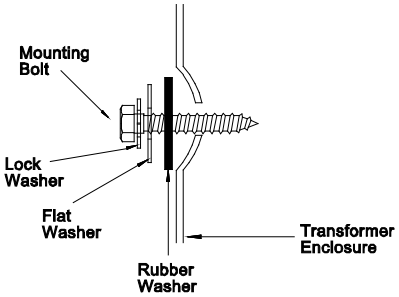

Larson Electronics LLC
9419 E US HWY 175, Kemp, TX 75143
Phone: 800.369.6671

www.LarsonElectronics.com
Email: sales@LarsonElectronics.com
Fax: 903.765.7664

Larson Electronics LLC
9419 E US HWY 175, Kemp, TX 75143
Phone: 800.369.6671

www.LarsonElectronics.com
Email: sales@LarsonElectronics.com
Fax: 903.765.7664

Larson Electronics LLC
9419 E US HWY 175, Kemp, TX 75143
Phone: 800.369.6671

www.LarsonElectronics.com
Email: sales@LarsonElectronics.com
Fax: 903.765.7664

Larson Electronics LLC
9419 E US HWY 175, Kemp, TX 75143
Phone: 800.369.6671

www.LarsonElectronics.com
Email: sales@LarsonElectronics.com
Fax: 903.765.7664

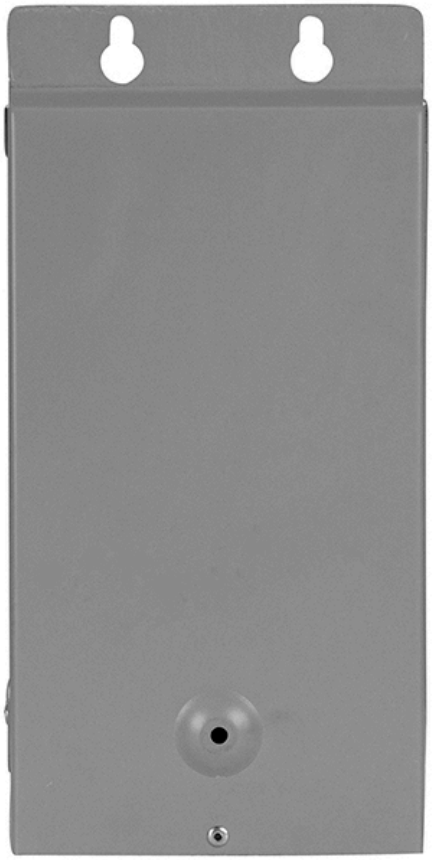

Larson Electronics LLC
9419 E US HWY 175, Kemp, TX 75143
Phone: 800.369.6671

www.LarsonElectronics.com
Email: sales@LarsonElectronics.com
Fax: 903.765.7664

Frequently Asked Questions (FAQ)

There are no Faqs