Larson Electronics LLC
9419 E US HWY 175, Kemp, TX 75143
Phone: 800.369.6671

www.LarsonElectronics.com
Email: sales@LarsonElectronics.com
Fax: 903.765.7664

MPD-CD5-CLP5.150AB-YT0-Z-3.L35-M1

150A Portable Panel, 208Y/120V 3PH, Camlock Inputs, (3) L21-30R Outlets, NEMA 3R

Product ID: 330130

Image: MPD-CD5-CLP5.150AB-YT0-Z-3.L35-M1

Larson Electronics LLC manufactures a wide variety of products, including custom built to spec designs. The pictures displayed for this unit are a general representation of form factor for the product line and may not accurately represent this exact configuration in every detail due to custom builds and changes between similar products in our standard catalog. The specifics for this configuration are listed in the specification table and supporting documentation (CAD files, Dimensional Drawing, Name Plate Diagram, Wiring Diagram, etc.). This means that specific details (receptacles, plugs, wires, connections, mounting brackets, external finishes, etc.) may not be accurately represented in images vs specifications. Please review specifications and do not order based solely on images.

MPD-CD5-CLP5.150AB-YT0-Z-3.L35-M1 - Temporary Power Distribution System

Line-in Cord: N/A
Line-in Cord Cap: (1 Set) 150A Single-pole 15-Series Male Camlock Receptacles [Green, Black, Red, Blue, White] [600V] w/ Flip Covers
Primary Voltage (V): 208Y/120V AC Wye
Primary Phase (PH): 3-Phase (3PH)
Primary Frequency (HZ): 60 Hz (60-cycles)
Primary Panel: 208Y/120V 3PH 150A MLO N3R
Primary Breaker(s): (3) 30A 3P MCB [250V]
Primary Outlet(s): (3) L21-30R NEMA Twist-Lock Receptacle [208Y/120V]
Primary Protection: MCB Circuit Breakers; Flip Covers
Transformer (KVA): N/A
Secondary Voltage (V): N/A
Secondary Phase (PH): N/A
Secondary Frequency (HZ): N/A
Secondary Panel: N/A
Secondary Breaker(s): N/A
Secondary Outlet(s): N/A
Secondary Protection: N/A
Form Factor: Blue Powder Coated MGL Dolly Cart w/ Run Flat Tires
Front Cover: Weatherproof Lid w/ Front-located Handle and Lock
Cover Locking Position: Upward w/ Internal Locks on Both Sides of the Lid
Vibration Isolators: Transformer and Breakers
Drain Plug: Panel
Cart Material: Steel
Cart Finish: High-Strength TGIC Polyester Powder Coated Blue
Cart Handle Orientation: Horizontal

Ratings

Max Primary OCP: 150A @ 208V

Max Secondary Output: -

NEMA 3R Indoor or Outdoor Use
NEMA 3R In-Use Weather Shield
Made in the USA
NRTL Certified to UL 1640
NRTL Certified to CSA C22.2 No. 14

Powder Coat Finish Standards:

Complies with ASTM D-523
Complies with ASTM D-3359
Complies with ASTM D-522
Complies with ASTM D-3363
Complies with ASTM D-2794

Special Orders - Special Requirements

Contact us for special requirements

Lifting Eyelet: (1) Center Point
Wheels: (2) Runflat Inflatable Tires [Rear] & (2) Swivel Casters [Front]
Dimensions: (*Please note that dimensions are approximate and subject to change*) 27.5"-W x 23.5"-D x 43.5-H
Weight: (*Please note that weight is approximate and subject to change*) 425 lb
Larson Electronics manufactures a wide variety of custom power distribution systems. The pictures displayed for this unit are a general representation of form factor and may not accurately represent this exact configuration in every detail due to being custom builds. The specifics for this configuration are listed in the specification table and one-line diagram.

Intl: 1-214-616-6180
Toll Free: 1-800-369-6671
Fax: 1-903-765-7664
E-mail: sales@larsonelectronics.com

All grounding shall comply with state and local codes and meet the minimum requirements of the National Electronic Code section 250

Made in Texas

The MPD-CD5-CLP5.150AB-YT0-Z-3.L35-M1 from Larson Electronics is a Temporary Power Distribution System that provides operators the ability to safely tap into and distribute three-phase 208Y/120V AC Wye power from a variety of sources including generators and direct grid power.

PLEASE NOTE: ANY FREE SHIPPING OFFERS DO NOT APPLY TO POWER DISTRIBUTION PANELS, TRANSFORMERS, OR SUBSTATIONS

The MPD-CD5-CLP5.150AB-YT0-Z-3.L35-M1 temporary power distribution system gives operators the ability to power their 208 volt and 120 volt equipment from a single system.

Operation:

• Primary Voltage: 208Y/120V AC Wye 3PH

• Primary Panel: 208Y/120V 3PH 150A MLO N3R

• Primary Breaker(s): (3) 30A 3P MCB [250V]

• Primary Outlet(s): (3) L21-30R NEMA Twist-Lock Receptacle [208Y/120V]

• Transformer: N/A

• Secondary Voltage: N/A

• Secondary Panel: N/A

• Secondary Breaker(s): N/A

• Secondary Outlet(s): N/A

*See specification table at the top of the page for more information about the power distribution system.

Protective Construction: A weatherproof flip cover at the front of the unit can be lifted upwards via an accessible handle, which serves as protection for (primary and secondary) breakers and receptacles in rugged environments when deployed at the site. Operators may access locks on the door and on the ears (accessible from the inside of the lid) of the panel. The panel can be positioned upwards and locked in place for easy access to receptacles and breakers. A drain plug on the panel helps the power distribution system achieve a NEMA 3R

rating, allowing the unit to be used in both indoor and outdoor locations.

The transformer is protected by vibration isolators that reduce damage to exterior jacket of wiring components and decrease noise during operation. In MGL-style power distribution systems, the presence of vibration isolators ensures wiring between the transformer and panel is well protected and does not have to be frequently replaced. Vibration isolators can also be found on the breakers, which protect the breakers from damage, prevent loose bolts/nuts and reduce overall noise during use in the field.

The power distribution system is constructed of steel with a polyester powder coated blue finish for durability against dirt, moisture, and mild corrosion. This special coating creates a high-strength barrier for protection from accidental bumps and scratches. The TGIC polyester powder coat finish offers reliable resistance against chemicals, UV light (sun light), and degrading elements in outdoor locations. Our powder coating solution ensures robust color retention for many years without fading. Custom colors, such as black, grey, desert tan, or forest green, and galvanized finishes are available upon request. Non-standard powder coat colors or galvanized finishes may increase price and lead times.

The transformer and load center/distribution assembly is mounted to a standard steel cart style frame resulting in an extremely stable, durable, and mobile power distribution platform. Two rotating urethane casters in the front and two inflatable run-flat tires in the rear on this cart style mounting platform provides easier substation mobility, and a center point lift eye allows easy lifting with cable or chain hooks. This temporary power distribution solution can be modified to meet the needs of job-site receptacle requirements. Larger units are available upon request and can be equipped with skids or trailer mounted.

Certification: All units are built in accordance to NFPA 70 (National Electric Code) and certified to UL 1640. All equipment is NEMA 3R rated for indoor and outdoor use and provide a degree of protection against dirt, water, and ice. NEMA 4 and NEMA 4X equipment can be equipped upon request.

Grounding: Transformer is grounded to the frame and we provide a grounding lug on the frame for the earth ground.
~Please check all motor loads for dual rated motors that will work 208 or 240.~

Applications: This power distribution system is ideal for indoor or outdoor use and applications including but not limited to, construction sites, plant maintenance, plant turnarounds, shows, exhibits, and shipyard operations. These power distribution systems are popularly used in applications where external power sources are often necessary. We also offer class rated transformers for use within explosion proof and hazardous location environments.

Custom Built Systems Available: Larson Electronics is a manufacturer and we can build portable power distribution systems to your specifications. Although we carry several models of portable power distribution systems in stock, we can deliver custom ordered units almost as quickly as our prebuilt units. If this model does not meet your needs, please contact us at 1-800-369-6671 or sales@larsonelectronics.com to discuss your specific requirements.

REV	DESCRIPTION	DATE
A	QUOTE	12/16/2025

MPD-CD5-CLP5.150AB-YT0-Z-3.L35-M1

LARSON ELECTRONICS®

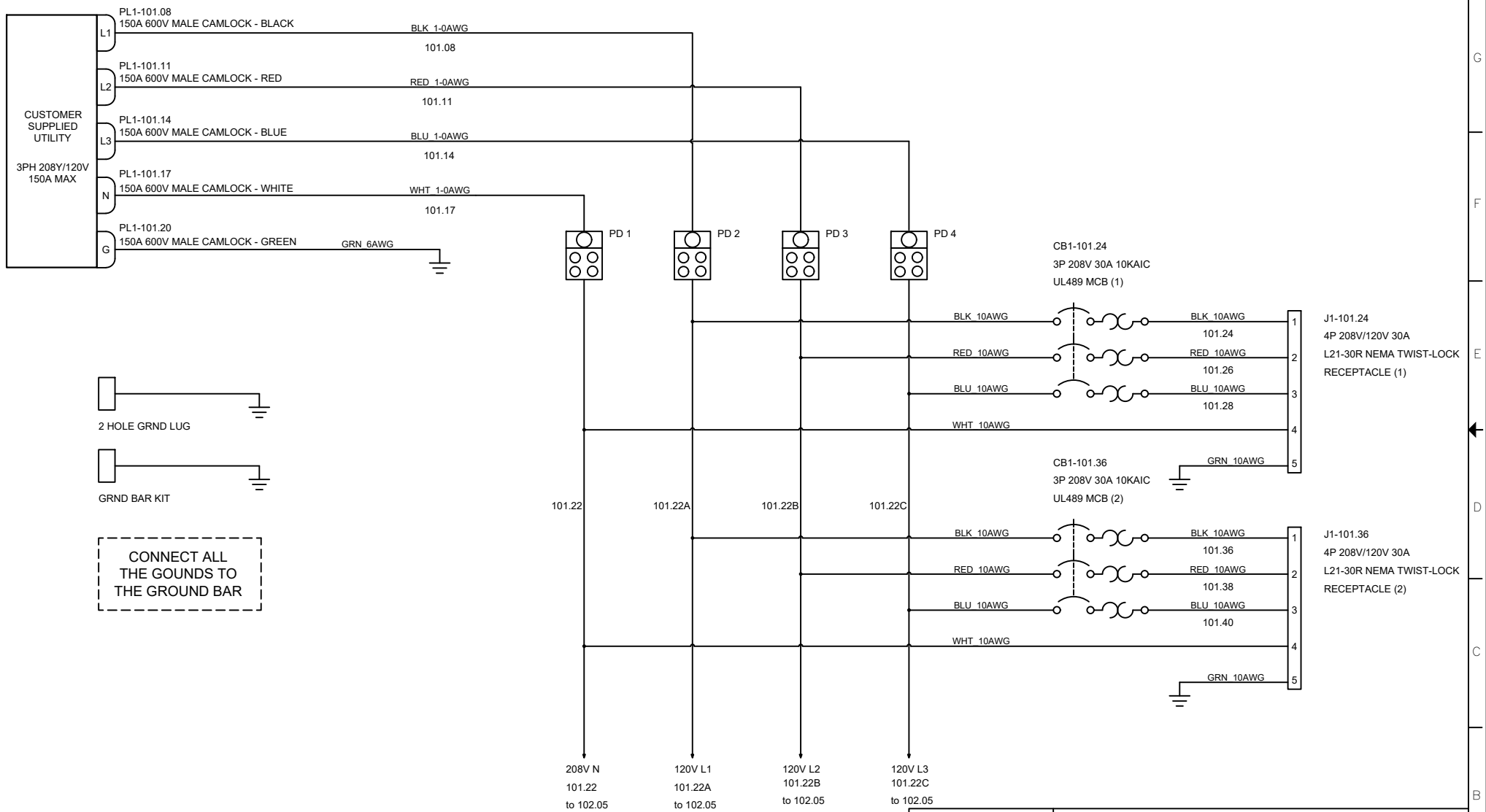

LARSON ELECTRONICS
9419 E US HWY 175,
KEMP, TX 75143

TITLE		
MPD-CD5-CLP5.150AB-YT0-Z-3.L35-M1		
DRAWN BY: L.Calib	DATE: 12-16-2025	REV: A
CHECKED BY	SHEET #: 1 OF 2	DRAWING #: 101

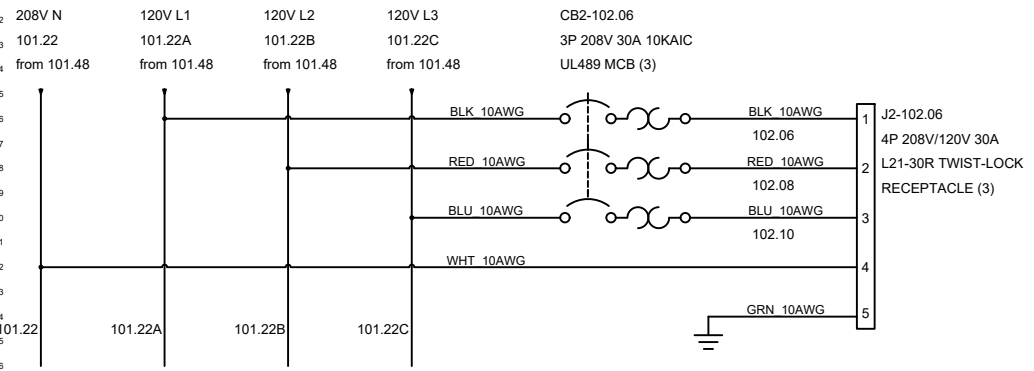

TAGS	QTY	CATALOG	DESCRIPTION
2 HOLE GRND LUG	1	UNV00007136	2 HOLE GROUND LUG
PL1-101.20	1	UNV00002277	600V 150A 8-2AWG MALE PANEL RECEPTACLE CAM LOCK-GREEN
PL1-101.17	1	UNV00002279	600V 150A 8-2AWG MALE PANEL RECEPTACLE CAM LOCK-WHITE
PL1-101.08	1	UNV00013726	600V 150A 8-2AWG MALE PANEL RECEPTACLE CAM LOCK-BLACK
PL1-101.11	1	UNV00013727	600V 150A 8-2AWG MALE PANEL RECEPTACLE CAM LOCK-RED
PL1-101.14	1	UNV00013728	600V 150A 8-2AWG MALE PANEL RECEPTACLE CAM LOCK-BLUE
J1-101.24 J1-101.36 J2-102.06	3	UNV00017506	3P 240V 30A L15-30R LOCKING RECEPTACLE
CB1-101.24 CB1-101.36 CB2-102.06	3	UNV00015171	3P 30A 240V UL489 DIN RAIL MOUNT CIRCUIT BREAKER
PD 1 PD 2 PD 3 PD 4	4	UNV00015084	POWER DISTRIBUTION BLOCK 175 A 600V 1-4 OPENING
GRND BAR KIT	1	UNV00013942C	GROUND BAR KIT

LARSON ELECTRONICS
9419 E US HWY 175,
KEMP, TX 75143

TITLE
MPD-CD5-CLP5.150AB-YT0-Z-3.L35-M1

DRAWN BY	DATE	REV
L.Calib	12-16-2025	A
CHECKED BY	SHEET #	DRAWING #
	2 OF 2	102

REV	DESCRIPTION	DATE
A	QUOTE	12/16/2025

MPD-CD5-CLP5.150AB-YT0-Z-3.L35-M1

LARSON ELECTRONICS®

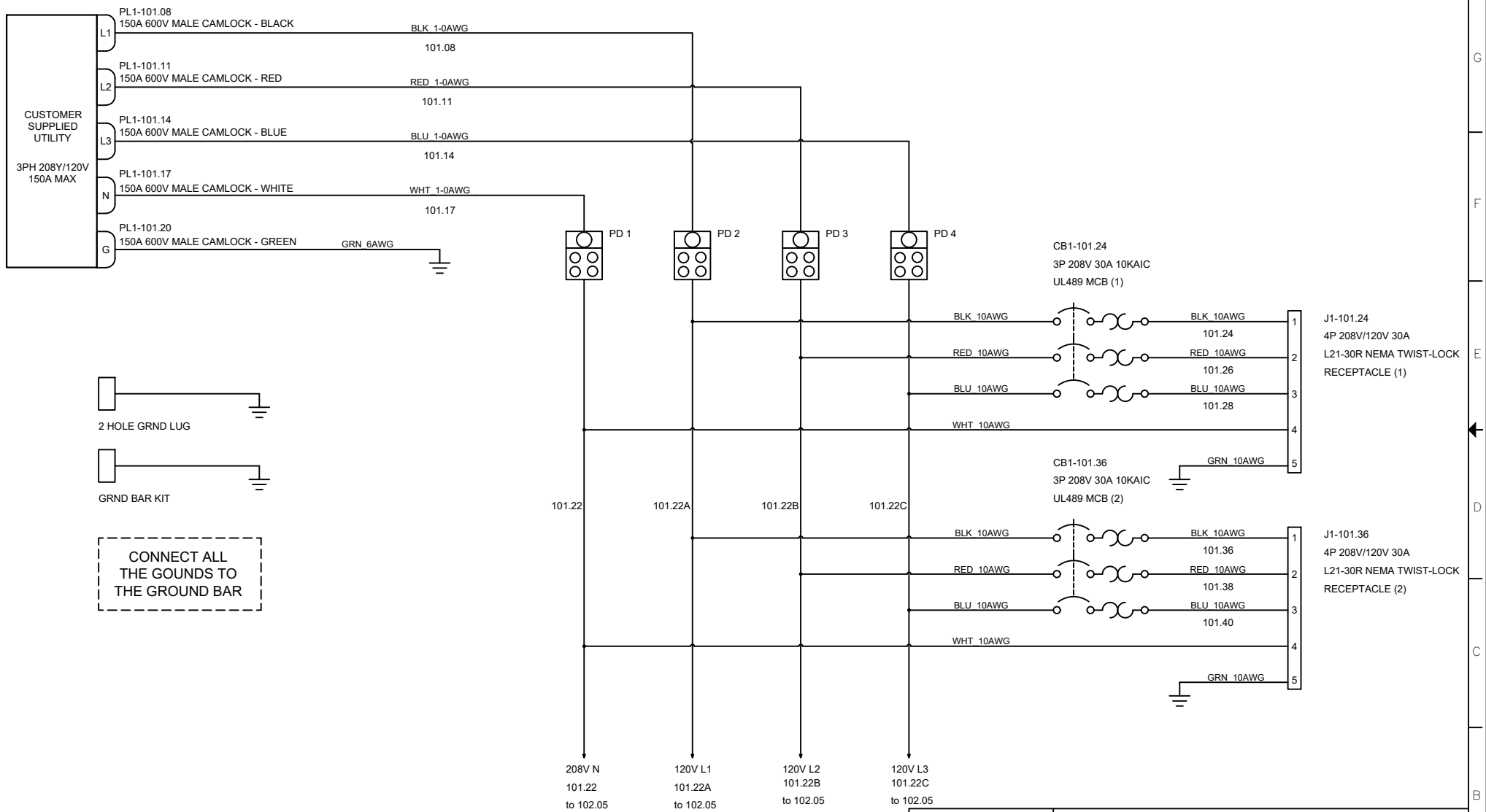

LARSON ELECTRONICS
9419 E US HWY 175,
KEMP, TX 75143

TITLE		
MPD-CD5-CLP5.150AB-YT0-Z-3.L35-M1		
DRAWN BY: L.Calib	DATE: 12-16-2025	REV: A
CHECKED BY	SHEET #: 1 OF 2	DRAWING #: 101

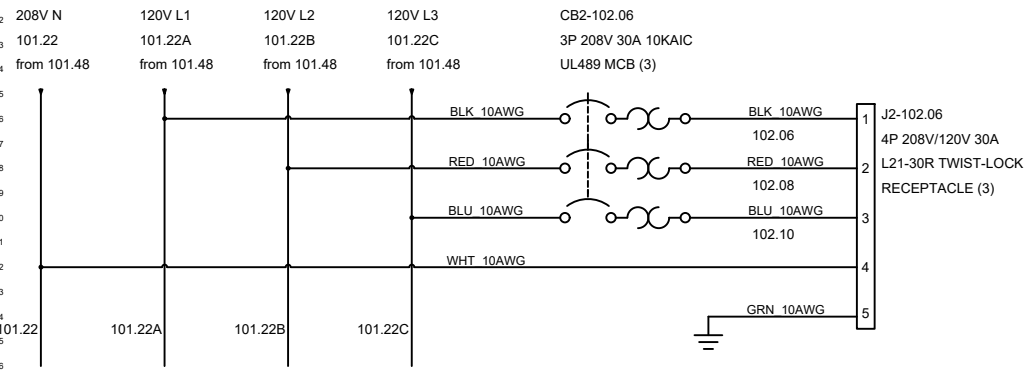

TAGS	QTY	CATALOG	DESCRIPTION
2 HOLE GRND LUG	1	UNV00007136	2 HOLE GROUND LUG
PL1-101.20	1	UNV00002277	600V 150A 8-2AWG MALE PANEL RECEPTACLE CAM LOCK-GREEN
PL1-101.17	1	UNV00002279	600V 150A 8-2AWG MALE PANEL RECEPTACLE CAM LOCK-WHITE
PL1-101.08	1	UNV00013726	600V 150A 8-2AWG MALE PANEL RECEPTACLE CAM LOCK-BLACK
PL1-101.11	1	UNV00013727	600V 150A 8-2AWG MALE PANEL RECEPTACLE CAM LOCK-RED
PL1-101.14	1	UNV00013728	600V 150A 8-2AWG MALE PANEL RECEPTACLE CAM LOCK-BLUE
J1-101.24 J1-101.36 J2-102.06	3	UNV00017506	3P 240V 30A L15-30R LOCKING RECEPTACLE
CB1-101.24 CB1-101.36 CB2-102.06	3	UNV00015171	3P 30A 240V UL489 DIN RAIL MOUNT CIRCUIT BREAKER
PD 1 PD 2 PD 3 PD 4	4	UNV00015084	POWER DISTRIBUTION BLOCK 175 A 600V 1-4 OPENING
GRND BAR KIT	1	UNV00013942C	GROUND BAR KIT

LARSON ELECTRONICS
9419 E US HWY 175,
KEMP, TX 75143

TITLE
MPD-CD5-CLP5.150AB-YT0-Z-3.L35-M1

DRAWN BY	DATE	REV
L.Calib	12-16-2025	A
CHECKED BY	SHEET #	DRAWING #
	2 OF 2	102

Larson Electronics LLC
9419 E US HWY 175, Kemp, TX 75143
Phone: 800.369.6671

www.LarsonElectronics.com
Email: sales@LarsonElectronics.com
Fax: 903.765.7664

Larson Electronics LLC
9419 E US HWY 175, Kemp, TX 75143
Phone: 800.369.6671

www.LarsonElectronics.com
Email: sales@LarsonElectronics.com
Fax: 903.765.7664

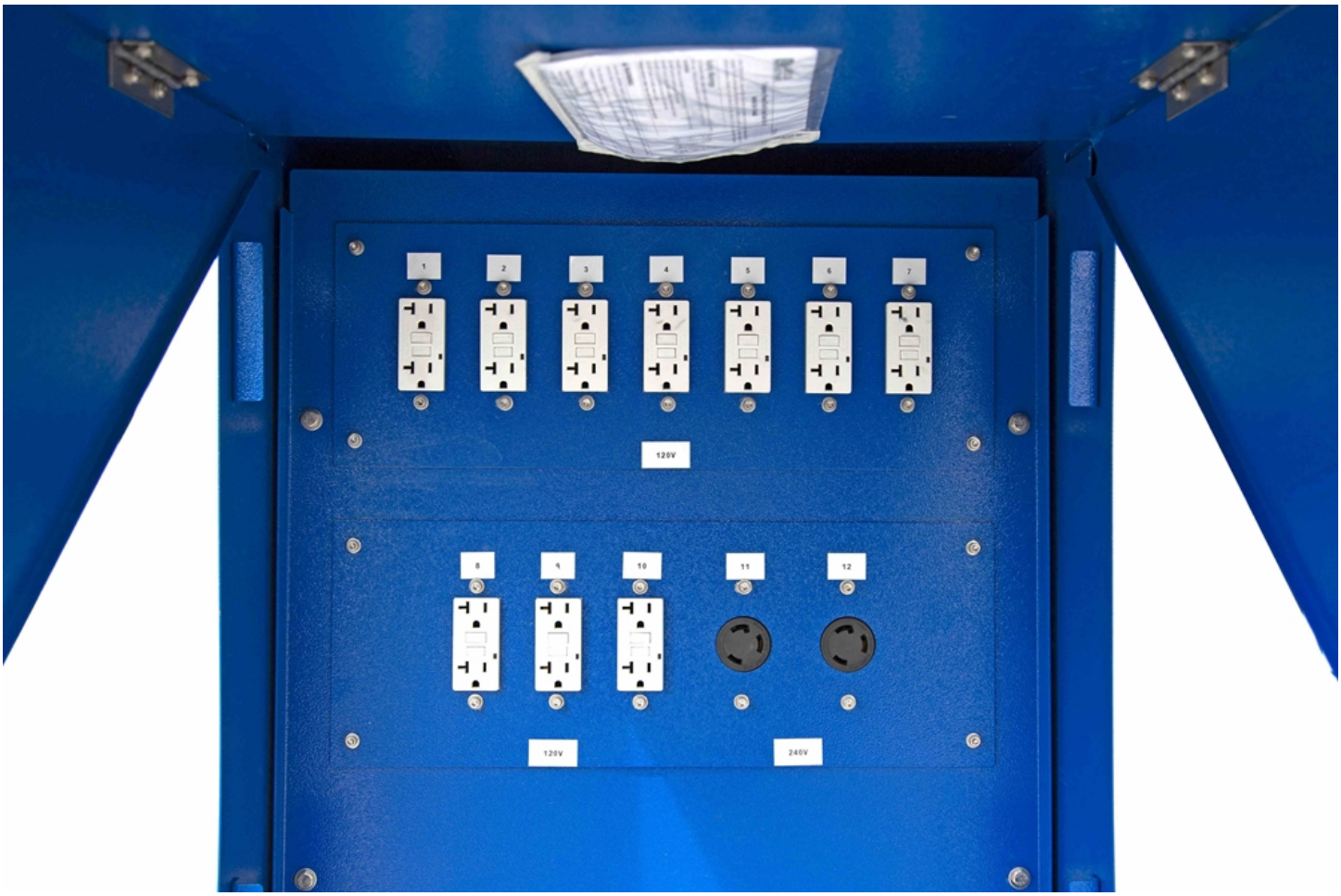

Larson Electronics LLC
9419 E US HWY 175, Kemp, TX 75143
Phone: 800.369.6671

www.LarsonElectronics.com
Email: sales@LarsonElectronics.com
Fax: 903.765.7664

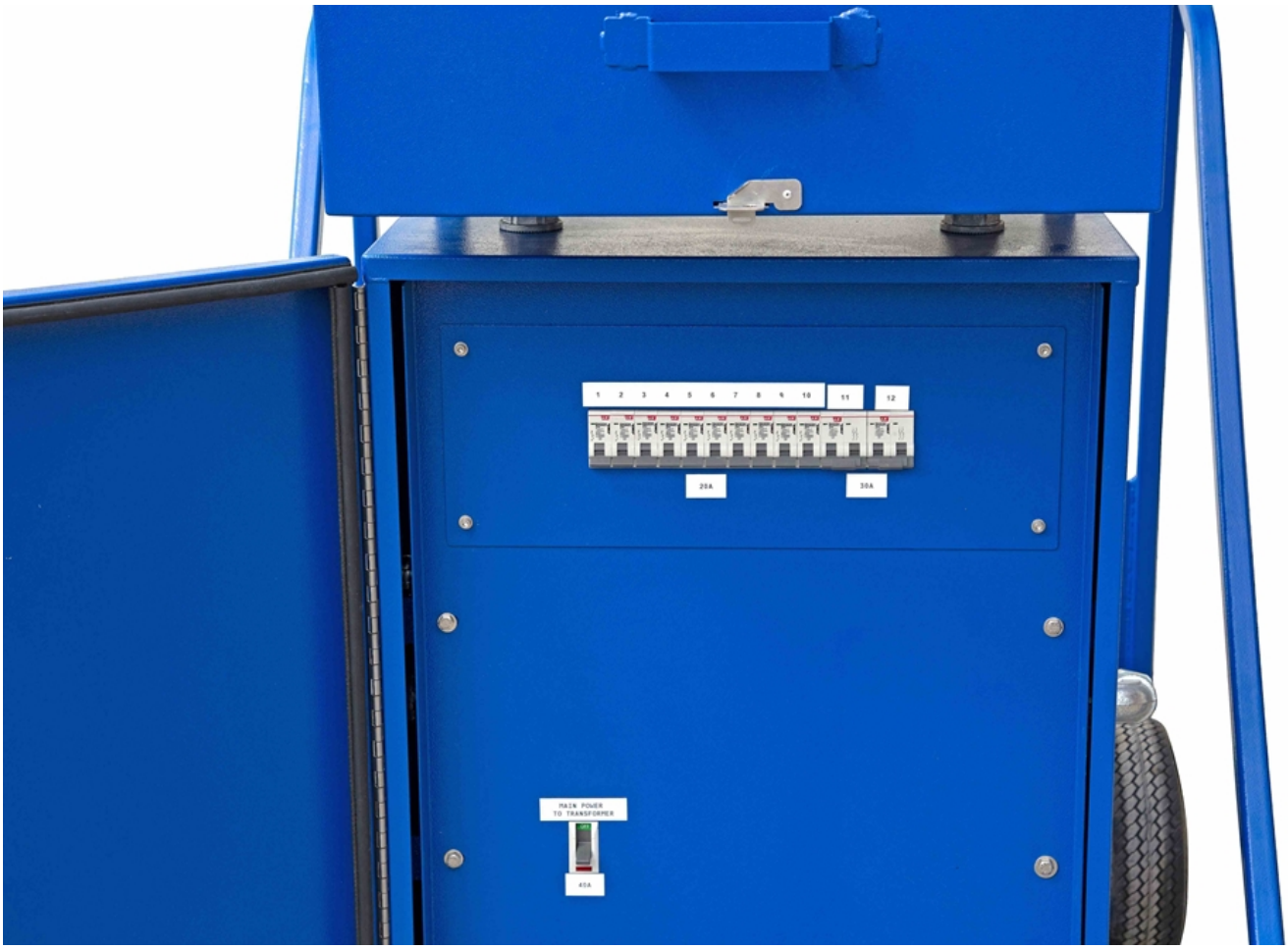

Larson Electronics LLC
9419 E US HWY 175, Kemp, TX 75143
Phone: 800.369.6671

www.LarsonElectronics.com
Email: sales@LarsonElectronics.com
Fax: 903.765.7664

Certification

Manufacturer: Larson Electronics LLC
Address: 9419 US-HWY 175
Kemp, Texas 75143

Declare the following equipment conforms to the standard(s) as listed:

Model: MGL, MPD, MGS, WAL Series
Description: Power Distribution Systems

Evaluated Listings:

ETL: UL 1640 - NEC / United States standards
ETL: CAN/CSA-C22.2 No. 14 – CEC / Canada standards

The MGL, MPD, MGS, WAL Series are certified to NEC and CEC standards for power distribution systems. These units are constructed using individual components certified to NEC and CEC standards, and are built to UL 1640 and CAN/CSA C22.2 No 14.

Signed for and on behalf of: Larson Electronics, LLC
Place of issue: Kemp, TX
Date of issue: September 11, 2019

Signature: James Thomas

Name: James Thomas
Position: Operations Manager

Certification

Manufacturer: Larson Electronics LLC
Address: 9419 US-HWY 175
Kemp, Texas 75143

Declare the following equipment conforms to the statements(s) as listed:

Model: MGL, MPD, MGS, WAL Series
Description: Power Distribution Systems

The MGL, MPD, MGS, WAL Series from Larson Electronics LLC utilize components certified to NEC and CEC standards. Larson Electronics LLC specifies wiring device standard designations (e.g. NEMA 5-20R, NEMA L6-30R, CS8265C) in the electrical diagrams and spec sheet of each product. Unless specified, the brands of components used, which may vary based on availability at the time of build, include but are not limited to: Hubbell, Leviton, Molex, Daniel Woodhead, Legrand, Eaton, Thomas & Betts, Russel Stroll, Meltric, Mennekes, ABB Group, Emerson, Appleton, Crouse Hinds, Killark, R.Stahl, or other certified equipment manufacturers.

Signed for and on behalf of: Larson Electronics, LLC
Place of issue: Kemp, TX

Signature: James Thomas

Name: James Thomas
Position: Operations Manager

TECHNICAL INFORMATION

POWDURA® POLYESTER TGIC
POWDER COATING

PRODUCT DESCRIPTION

PLR2-60002
RAL 5010 GENT BLUE

POWDURA® Polyester TGIC Powder Coatings are recommended for a broad range of interior/exterior functional and decorative applications.

Advantages:

- Provides excellent overbake resistance
- Good chemical resistance
- Very good outdoor exposure qualities
- Wide range of special effects available
- Available in a broad range of colors

Many applications, including:
Steel Furniture
Refrigeration
Electronic Cabinetry
Scaffolding
Electrical Equipment
Instrument Housings

Appliances
Sporting Goods

Storage: Powdura® Powder Coatings should be kept in a dry and cool area at temperatures below 80°F (27°C). When not in use, store powder in sealed containers: fine powders are hygroscopic.

Substrate Preparation: Substrate should be free of grease, oil, dirt, fingerprints, drawing compounds, any contamination, and surface preparation treatments to ensure optimum adhesion and coating performance properties. The use of a chemical conversion coating prior to the application of a powder coating is strongly recommended.

Testing: Due to the wide variety of substrates, surface preparation methods, application methods, and environments, the customer should test the complete system for adhesion, compatibility and performance prior to full-scale application.

CAUTIONS

Thoroughly review product SDS prior to using this product. Please consult your local sales representative or your local Sherwin-Williams facility for additional information.

Special Advisory: River texture type finishes are unique finishes that may vary with application, film thickness and cure conditions. Light colors and very dark colors may occasionally show colored specks that appear as contamination. This is the nature of this type of finish and cannot be predicted or controlled. Thorough cleaning is required when switching to a normal smooth powder coating to prevent craters in the smooth finish.

APPLICATION

Cure Schedule:	10 MIN @ 400F
Film Thickness Range(mils):	3.0-5.0

ATTRIBUTES

Specific Gravity(g/ml):	1.72
Coverage at 1.0 Mil(ft^2/lb):	112.4
60° Gloss: (ASTM D-523)	15-30
Adhesion: (ASTM D-3359)	5B
Flexibility: (ASTM D-522)	Pass 1/8"
Pencil Hardness: (ASTM D-3363)	H-2H
Impact Resistance(in.lb): (ASTM D-2794)	Dir 100 in-lbs Rev 100 in-lbs

Note: Performance measured using 24-gauge Bonderite® 1000 test panels.

Shelf Life:	12 Months

Sherwin-Williams recommends that all material be used in FIFO order (first in - first out). Materials that exceed the recommended shelf life should be tested prior to use.

Note:
Product Data Sheets are periodically updated to reflect new information relating to the product. It is important that the customer obtain the most recent Product Data Sheet for the product being used. The information, rating and opinions stated above pertain to the material currently offered and represent the results of tests believed to be reliable. However, due to variations in customer handling and methods of application, which are not known, or under our control, The Sherwin-Williams Company cannot make any warranties or guaranties as to the end results.

08 00

Grove City Product Mod

24-Mar-2020

Material Safety Data Sheet

To Whom It May Concern,

Larson Electronics LLC MGL, MPD, MGS, WAL Series industrial line of portable power distribution systems are considered "ARTICLES" under 29 CFR 1910-1200, the OSHA Hazard Communication Standard, and do not require a Material Safety Data Sheet (MSDS).

Articles are specifically exempt from the regulations of this standard. OSHA defines an article as follows:

1910-1200(c) – Article means a manufactured item other than a fluid or particle:

i. Which is formed to a specific shape or design during manufacture;
ii. Which has end use function(s) dependent in whole or in part upon its shape or design during end use; and
iii. Which under normal conditions does not release more than very small quantities.

Regards,

Ray Smith

Ray Smith
Larson Electronics, LLC.

LARSON ELECTRONICS LLC • 9419 E US HWY 175 • KEMP, TX 75143
p: 1-800-369-6671 • intl: 903-498-3363 • f: 903-498-3364 • sales@larsonelectronics.com

<- Back

Product Description

Title:	STAGE & STUDIO PORTABLE WIRING COMPARTMENTS
Company:	LARSON ELECTRONICS LLC - Kemp, TX USA
Product Information:	Power Distribution System, Model Nos. MGL, MPD, MGS, WAL series; Followed by AAK-PBB.FFF-SCC.GGG-EEXCCC.DDD; Where AA = 2,3,5,7,9,15,20,25,30,45,50,75; BB = 1P, 3P; FFF = 480,240,208,120; CC = 1P,3P; GGG = 480,240,208,120; EE = # of outlets; CCC = voltage; DDD = outlet amperage.
Evaluated to the following:	A representative sample of the listed devices have been tested, investigated and found to comply with the requirements of the Standard(s) for Stage & Studio Portable Wiring Compartments (UL-1640) and are identified with the ETL Listed Mark.

<- Back

Contact Us

Americas+1-888-347-5478
(or +1-312-906-7801)
Email
dirlist@intertek.com

Intertek Home
Product Directories

Inspector Center

Get up-to-date information on everything from our Accreditations to our Certifications and Marks. Learn more...

News

Intertek Unveils New Design for Product Safety and Quality Certification Marks. Learn more...

© 2010 Intertek All Rights Reserved.
All other product or service names are the property of their respective owners.

intertek
Total Quality. Assured.

<- Back

Product Description

Title: INDUSTRIAL CONTROL EQUIPMENT

Company: LARSON ELECTRONICS LLC - Kemp, TX USA

Product Information: Industrial Control Panels For General Use.

Power Distribution System, Model Nos. MGL, MPD, MGS series; Followed by AAK-PBB.FFF-SCC.GGG-EEXCCC.DDD; Where AA = 2,3,5,7,9,15,20,25,30,45,50,75; BB = 1P, 3P; FFF = 480,240,208,120; CC = 1P,3P; GGG = 480,240,208,120; EE = # of outlets; CCC = voltage; DDD = outlet amperage.

Evaluated to the following: A representative sample of the listed devices have been tested, investigated and found to comply with the requirements of the Standard(s) for Industrial Control Equipment (CAN/CSA-C22.2 No. 14) and are identified with the cETL Listed Mark.

<- Back

Contact Us

ETL listed products that are in doubt or for products that do not appear in the directory, please request a verification of certification.
Americas+1-888-347-5478 (or +1-847-660-7407)
Email etldirectory@intertek.com

Intertek Home
Product Directories
DLP on mobile devices

Inspector Center

Get up-to-date information on everything from our Accreditations to our Certifications and Marks. Learn more...

News

Intertek Unveils New Design for Product Safety and Quality Certification Marks. Learn more...

© 2010 Intertek All Rights Reserved.
All other product or service names are the property of their respective owners.

Certification

Manufacturer: Larson Electronics LLC
Address: 9419 US-HWY 175
Kemp, Texas 75143

Declare the following equipment conforms to the standard(s) as listed:

Model: MGL, MPD, MGS, WAL Series
Description: Power Distribution Systems

The MGL, MPD, MGS, WAL series complies with the below standards set forth by the listed Association's requirements. Purchased and manufactured components are evaluated to Larson Electronics LLC Quality Control Management system per ISO 9001:2015. This certification applies to all specimens manufactured in accordance to the manufacture's drawings.

Evaluated Standards:

AISC: Structural steel skid design
NFPA 70: National Electrical Code
ASTM A36: Standard Specification for Carbon Structural Steel
ASTM A123: Standard Specification for Zinc (Hot-Dip Galvanized) Coatings on Iron and Steel Products
ASTM A153: Standard Specification for Zinc Coating (Hot-Dip) on Iron and Steel Hardware
ASTM A489: Standard Specification for Carbon Steel Lifting Eyes
ASTM A502: Standard Specification for Rivets, Steel, Structural
ASTM A563: Standard Specification for Carbon and Alloy Steel Nuts
ASTM A500: Standard Specification for Cold-Formed Welded and Seamless Carbon Steel Structural Tubing in Rounds and Shapes
ASTM B172: Standard Specification for Rope-Lay-Stranded Copper Conductors Having Bunch-Stranded Members, for Electrical Conductors
ASTM D7803: Standard Practice for Preparation of Zinc (Hot-Dip Galvanized) Coated Iron and Steel Product and Hardware Surfaces for Powder Coating
SAE J429: Mechanical and Material Requirements for Externally Threaded Fasteners
AWS D1.1: Structural Welding – Steel
ICEA S-58-679: Standard for Control, Instrumentation and Thermocouple Extension Conductor Identification
ICEA S-75-381: Portable and Power Feeder Cables for Use in Mines and Similar Applications
NEMA OFP 1-2017: Protection of Receptacle Outlets in Wet Locations According to the National Electrical Code

NEMA PB 1-2011: Panelboards
NEMA ST 20-2014: Dry Type Transformers for General Applications
NEMA WD 1-1999 (R2015): General Color Requirements for Wiring Devices
ANSI C80.1-2015: American National Standard for Electric Rigid Steel Conduit
ANSI C119.4-2016: American National Standard for Electric Connectors
ANSI Z535.4-2011: American National Standard for Product Safety Signs and Labels
ANSI/IEC 60529-2004 (R2011): American National Standard for Degrees of Protection Provided by Enclosures (IP Code)

Signed for and on behalf of: Larson Electronics, LLC
Place of issue: Kemp, TX

Signature: James Thomas

Name: James Thomas
Position: Operations Manager

LARSON ELECTRONICS LLC • 9419 E US HWY 175 • KEMP, TX 75143
p: 1-800-369-6671 • intl: 903-498-3363 • f: 903-498-3364 • sales@larsonelectronics.com

Certification

Manufacturer: Larson Electronics LLC
Address: 9419 US-HWY 175
Kemp, Texas 75143

Declare the following equipment conforms to the standard(s) as listed:

Model: MGL, MPD, MGS, WAL Series
Description: Power Distribution Systems

Evaluated Listings:

CE: DIRECTIVE 2014/35/EU - LOW VOLTAGE DIRECTIVE
CE: DIRECTIVE 2014/30/EU - EMC DIRECTIVE
CE: Regulation (EC) No 1907/2006 - REACH REGULATION
CE: DIRECTIVE 2015/863/EU - ROHS DIRECTIVE

The MGL, MPD, MGS, WAL series complies with the essential protection requirements of the European Parliament of the Council Directive for Low Voltage Directive, EMC Directive, REACH Regulation, and RoHS Directive. This certification applies to all specimens manufactured in accordance to the manufacture's drawings.

Signed for and on behalf of: Larson Electronics, LLC
Place of issue: Kemp, TX

Signature: James Thomas

Name: James Thomas
Position: Operations Manager

Certification

Manufacturer: Larson Electronics LLC
Address: 9419 US-HWY 175
Kemp, Texas 75143

Declare the following equipment conforms to the standard(s) as listed:

Model: MGL, MPD, MGS, WAL Series
Description: Power Distribution Systems

Evaluated Listings:

CE: Regulation (EC) No 1907/2006 - REACH REGULATION
CE: DIRECTIVE 2015/863/EU - ROHS DIRECTIVE

This is to certify that products offered by Larson Electronics LLC comply with the Reduction of Hazardous Substances (RoHS) directives. Directive 2002/95/EC became effective on 1 July 2006. It restricts the use of six substances in the manufacture of electrical and electronic equipment. This directive was revised in June 2011 and is now referred to as directive 2011/65/EU. Directive 2015/863/EU amending Annex II to Directive 2011/65/EU announced plans to add four substances from 22 July 2019.

We hereby certify that the equipment specified above conforms to the Directive(s) by containing less of the restricted substances than the stated limits.

Signed for and on behalf of: Larson Electronics, LLC
Place of issue: Kemp, TX

Signature: James Thomas

Name: James Thomas
Position: Operations Manager

Certification

Manufacturer: Larson Electronics LLC
Address: 9419 US-HWY 175
Kemp, Texas 75143

Declare the following equipment conforms to the standard(s) as listed:

Model: MGL, MPD, MGS, WAL Series
Description: Power Distribution Systems

Evaluated Listings:

CE: Regulation (EC) No 1907/2006 - REACH REGULATION

This letter establishes the opinion of Larson Electronics LLC regarding the status, under the current European Union ("EU") Regulations on Registration, Evaluation, Authorization, and Restriction of Chemical Substances ("REACH").

REACH does not apply to manufactured products which are referred to as "completed articles". Substances (chemicals) are subject to REACH registration, NOT products.

In addition, Articles are exempt from the REACH requirements if (a) the Article does not contain a substance of very high concern or candidate substance in an amount exceeding 0.1% weight by weight, and (b) if substances present in the Article in excess of 1 ton per year per importer are not expected nor intended to be released.

Based on communication with our raw material suppliers, we conclude that to the best of our knowledge our products requiring REACH compliance do not contain any of the currently listed SVHC in concentrations of 0.1% or above.

Accordingly, we foresee no registration or pre-registration requirement for the products we supply.

Signed for and on behalf of: Larson Electronics, LLC
Place of issue: Kemp, TX

Signature: James Thomas

Name: James Thomas
Position: Operations Manager

Larson Electronics LLC
9419 E US HWY 175, Kemp, TX 75143
Phone: 800.369.6671

www.LarsonElectronics.com
Email: sales@LarsonElectronics.com
Fax: 903.765.7664

Frequently Asked Questions (FAQ)

There are no Faqs