Larson Electronics LLC
9419 E US HWY 175, Kemp, TX 75143
Phone: 800.369.6671

www.LarsonElectronics.com
Email: sales@LarsonElectronics.com
Fax: 903.765.7664

MPD-PSBEC-PWCDT

Portable Spider Box Enclosure - Cage, Powder Coated Desert Tan

Product ID: 308379



Image: MPD-PSBEC-PWCDT

Larson Electronics LLC manufactures a wide variety of products, including custom built to spec designs. The pictures displayed for this unit are a general representation of form factor for the product line and may not accurately represent this exact configuration in every detail due to custom builds and changes between similar products in our standard catalog. The specifics for this configuration are listed in the specification table and supporting documentation (CAD files, Dimensional Drawing, Name Plate Diagram, Wiring Diagram, etc.). This means that specific details (receptacles, plugs, wires, connections, mounting brackets, external finishes, etc.) may not be accurately represented in images vs specifications. Please review specifications and do not order based solely on images.

This unit is Made In USA - Manufactured in Texas

MPD-PSBEC-PWCDT Spider Box Enclosure
Dimensions: 31"L x 23"W x 16"H
Dimensions Inside: 19.75" x 13.75" x 8.52"
Weight: -
Housing Material: Steel
Form Factor: Desert Tan Powder Coated Spider Box in Black Rugged Cage Frame
Mounting: Rugged Cage Mount

Ratings/Approvals
NEMA 3R Weatherproof

Special Orders - Special Requirements
Contact us for special requirements
Toll Free: 1-800-369-6671
Intl: 1-903-270-1187
Fax: 1-903-765-7664
E-mail: sales@larsonelectronics.com

This unit is Made In USA - Manufactured in Texas

The Larson Electronics MPD-PSBEC-PWCDT is a portable spider box enclosure for indoor, outdoor and rugged applications. For robust protection, the enclosure is NEMA 3R rated and protected by rugged cage frame.

This portable spider box enclosure is constructed of steel with a NEMA 3R enclosure rating. Protected by a powder coated desert tan finish, a heavy-duty black cage frame protects the unit from drops, bumps and objects. The enclosure is NEMA 3R rated for indoor and outdoor

use and provides a degree of protection against dirt, water and ice. NEMA 4 and NEMA 4x equipment can be equipped upon request.

Applications: Indoor or outdoor applications including but not limited to, construction sites, plant maintenance, plant turnarounds, shows, exhibits and shipyard operations. These units are popularly used in applications where external power sources are often necessary.

Larson Electronics is a manufacturer and we can build portable power distribution systems to your specifications. Although we carry several models of portable power distribution systems in stock, we can deliver custom ordered units almost as quickly as our prebuilt units. If this model does not meet your needs, please contact us at 1-800-369-6671 or sales@larsonelectronics.com to discuss your specific requirements.

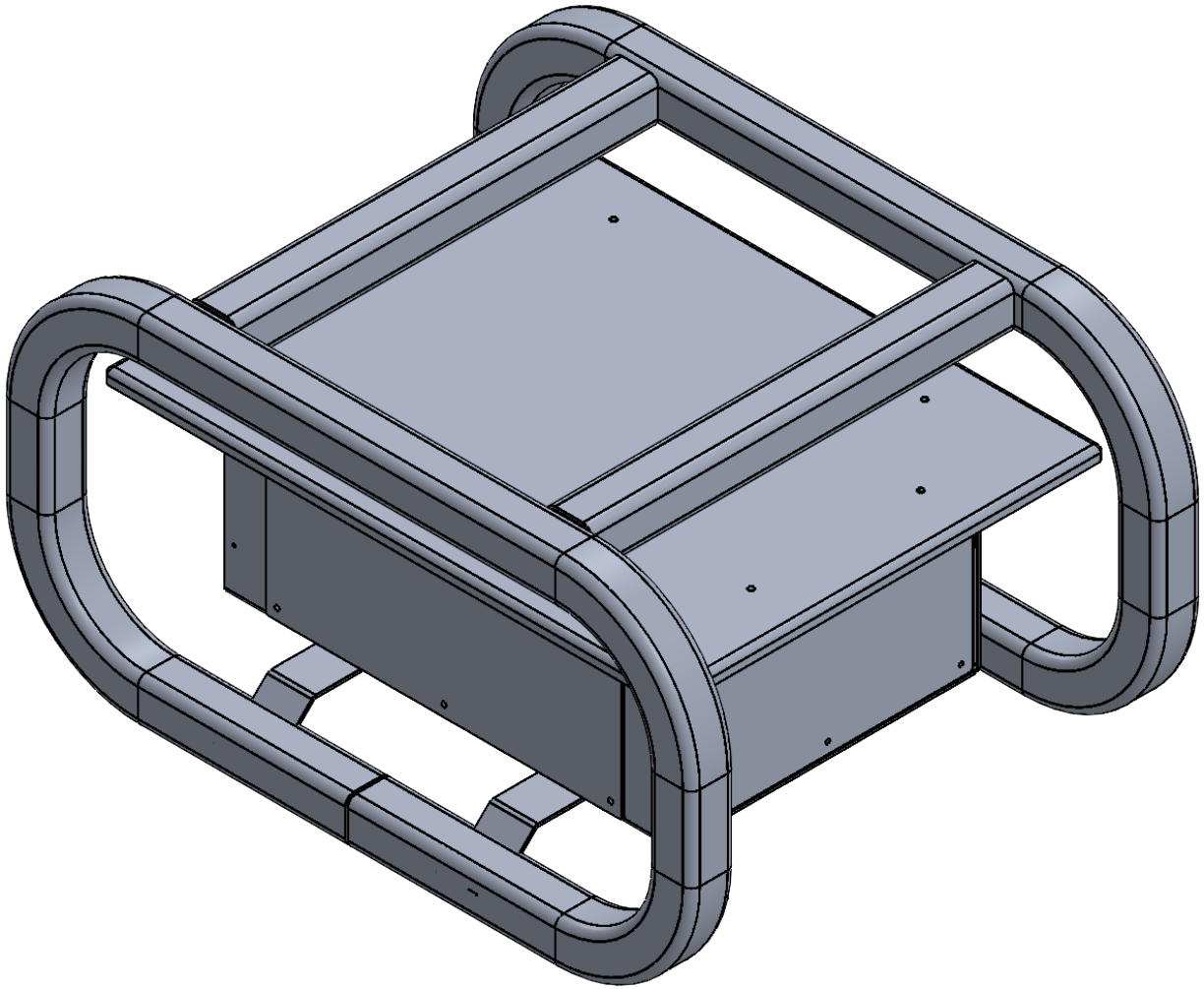

LARSON ELECTRONICS

PART NUMBER:
MPD-PSBEC-PWCDT

SIZE	REV
A	2

DIMENSIONS ARE IN INCHES				
DO NOT SCALE DRAWING	DATE	8/19/2024	SCALE: NTS	SHEET 1 OF 25

PROPRIETARY AND CONFIDENTIAL
THE INFORMATION CONTAINED IN THIS DRAWING IS THE SOLE PROPERTY OF LARSON ELECTRONICS LLC. ANY REPRODUCTION IN PART OR AS A WHOLE WITHOUT THE WRITTEN PERMISSION OF LARSON ELECTRONICS LLC IS PROHIBITED.

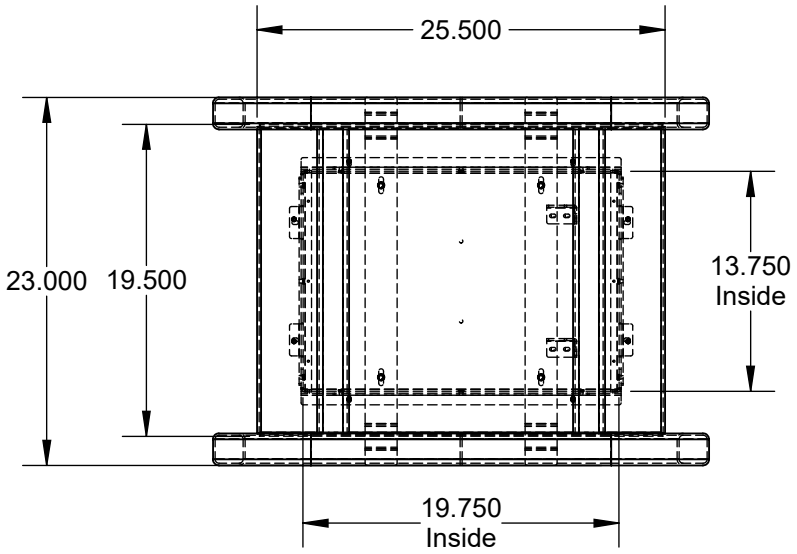

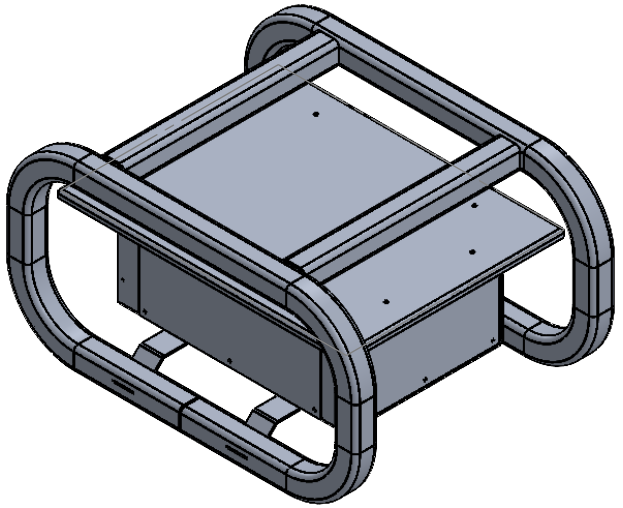

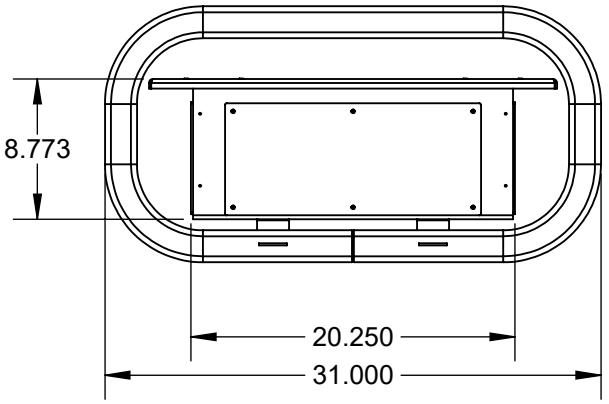

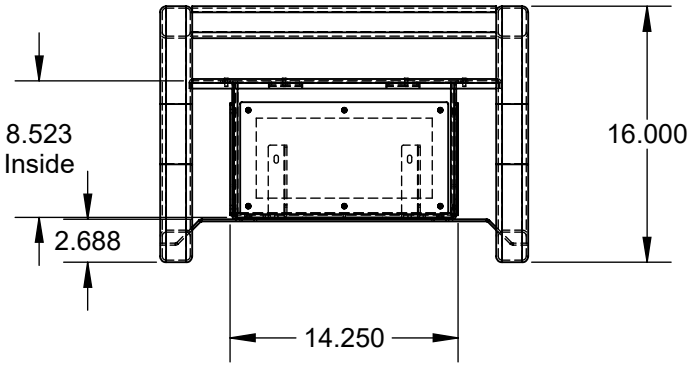

LARSON ELECTRONICS

PART NUMBER:
MPD-PSBEC-PWCDT

SIZE	REV
A	2

PROPRIETARY AND CONFIDENTIAL
THE INFORMATION CONTAINED IN THIS DRAWING IS THE SOLE PROPERTY OF LARSON ELECTRONICS LLC. ANY REPRODUCTION IN PART OR AS A WHOLE WITHOUT THE WRITTEN PERMISSION OF LARSON ELECTRONICS LLC IS PROHIBITED.

DIMENSIONS ARE IN INCHES				
DO NOT SCALE DRAWING	DATE	8/19/2024	SCALE: NTS	SHEET 3 OF 25

Larson Electronics LLC
9419 E US HWY 175, Kemp, TX 75143
Phone: 800.369.6671

www.LarsonElectronics.com
Email: sales@LarsonElectronics.com
Fax: 903.765.7664

Frequently Asked Questions (FAQ)

There are no Faqs