Larson Electronics LLC
9419 E US HWY 175, Kemp, TX 75143
Phone: 800.369.6671

www.LarsonElectronics.com
Email: sales@LarsonElectronics.com
Fax: 903.498.3364

MPD-CS5-309.100AB-YT0-Z-15.N09-M1

Portable Spider Box, 208Y/120V Wye 3PH, 5100B9W Inlet, (15) 5-20R Duplex Outlets, NEMA 3R

Product ID: 306211



Larson Electronics LLC manufactures a wide variety of products, including custom built to spec designs. The pictures displayed for this unit are a general representation of form factor for the product line and may not accurately represent this exact configuration in every detail due to custom builds and changes between similar products in our standard catalog. The specifics for this configuration are listed in the specification table and supporting documentation (CAD files, Dimensional Drawing, Name Plate Diagram, Wiring Diagram, etc.). This means that specific details (receptacles, plugs, wires, connections, mounting brackets, external finishes, etc.) may not be accurately represented in images vs specifications. Please review specifications and do not order based solely on images.

This unit is Made In USA - Manufactured in Texas

MPD-CS5-309.100AB-YT0-Z-15.N09-M1 Spider Box

Line-in Cord: N/A
Line-in Cord Cap (Input): 5100B9W IEC 60309 100A Pin & Sleeve Male Inlet [208Y/120V]
Primary Voltage (V): 208Y/120V AC Wye
Primary Phase (PH): 3-phase (3PH)
Primary Frequency (HZ): 60 Hz (60-cycles)
Primary Panel: 208Y/120V 3PH 100A MLO Yellow Spider Box N3R
Primary Breaker(s): (15) 20A 1P MCB [125V]
Primary Outlet(s): (15) 5-20R NEMA DPLX [125V]
Primary Protection: MCB Circuit Breakers; Weather-proof Device Covers
GFI Trip Level: N/A
Transformer (KVA): N/A
Secondary Voltage (V): N/A
Secondary Phase (PH): N/A
Secondary Frequency (HZ): N/A
Housing Material: Steel
Form Factor: Yellow Powder Coated Spider Box w/ Legs
Mounting: Portable/Base Stand
Dimensions: 33" x 29" x 14.05"
Weight: -

Ratings/Approvals

Max Primary OCP: 100A @ 208V

Max Secondary Output: N/A

NEMA 3R Indoor or Outdoor Use
NRTL Certified to UL 1640
NRTL Certified to CSA C22.2 No. 14
Made in the USA

Powder Coat Finish Standards:

Complies with ASTM D-523
Complies with ASTM D-3359
Complies with ASTM D-522
Complies with ASTM D-3363
Complies with ASTM D-2794

Special Orders - Special Requirements

Contact us for special requirements
Toll Free: 1-800-369-6671
Intl: 1-903-270-1187
Fax: 1-903-498-3364
E-mail: sales@larsonelectronics.com

This unit is Made In USA - Manufactured in Texas

The MPD-CS5-309.100AB-YT0-Z-15.N09-M1 from Larson Electronics is a Portable Spider Box for indoor, outdoor, and rugged applications. This unit allows operators to use three-phase 208Y/120V AC Wye power via a 5100B9W electrical inlet. The device is equipped with eight output

receptacles for equipment. For robust protection, the safety yellow spider box is NEMA 3R rated and protected by impact/flame resistant weatherproof covers.

Operation:

- Primary Voltage: 208Y/120V AC Wye 3PH
- Primary Panel: 208Y/120V 3PH 100A MLO Yellow Spider Box N3R
- Primary Breaker(s): (15) 20A 1P MCB [125V]
- Primary Outlet(s): (15) 5-20R NEMA DPLX [125V]
- Transformer: N/A
- Secondary Voltage: N/A
- Secondary Panel: N/A
- Secondary Breaker(s): N/A
- Secondary Outlet(s): N/A

*See specification table at the top of the page for more information about the power distribution system.

This portable spider box has a 100-amp IEC 60309 5100B9W male pin/sleeve inlet for bringing three-phase 208Y/120V AC Wye power into the unit. The device supports fifteen 20-amp 1-pole 125V miniature circuit breakers protecting fifteen 20-amp 5-20R NEMA GFCI Duplex outlets. The MPD-CS5-309.100AB-YT0-Z-15.N09-M1 spider box features short circuit, overload, open neutral, and reverse phasing protection. Should circuit overload occur, the unit will automatically shut down to protect the spider box from damage.

This safety yellow device is approved for wet locations and features heavy-duty impact/flame resistant weatherproof covers. Two angled black legs at the base of the unit and low center of gravity ensures this spider box does not tip over in the field.

The housing is constructed of steel with a NEMA 3R enclosure rating. The power distribution system has a polyester powder coated finish for durability against dirt, moisture, and mild corrosion. This special coating creates a high-strength barrier for protection from accidental bumps and scratches. The TGIC polyester powder coat finish offers reliable resistance against chemicals, UV light (sun light) and degrading elements in outdoor locations. Our powder coating solution ensures robust color retention for many years without fading. Custom colors, such as blue, black, grey, desert tan, or forest green, and galvanized finishes are available upon request. Non-standard powder coat colors or galvanized finishes may increase price and lead times.

Certification: All units are built in accordance to NFPA 70 (National Electric Code). All equipment is NEMA 3R rated for indoor and outdoor use and provide a degree of protection against dirt, water, and ice. NEMA 4 and NEMA 4x equipment can be equipped upon request.

Applications: Indoor or outdoor applications including but not limited to, construction sites, plant maintenance, plant turnarounds, shows, exhibits and shipyard operations. These units are popularly used in applications where external power sources are often necessary. We also offer class rated transformers for use within explosion proof and hazardous location environments.

Larson Electronics is a manufacturer and we can build portable power distribution systems to your specifications. Although we carry several models of portable power distribution systems in stock, we can deliver custom ordered units almost as quickly as our prebuilt units. If this model does not meet your needs, please contact us at 1-800-369-6671 or sales@larsonelectronics.com to discuss your specific requirements.

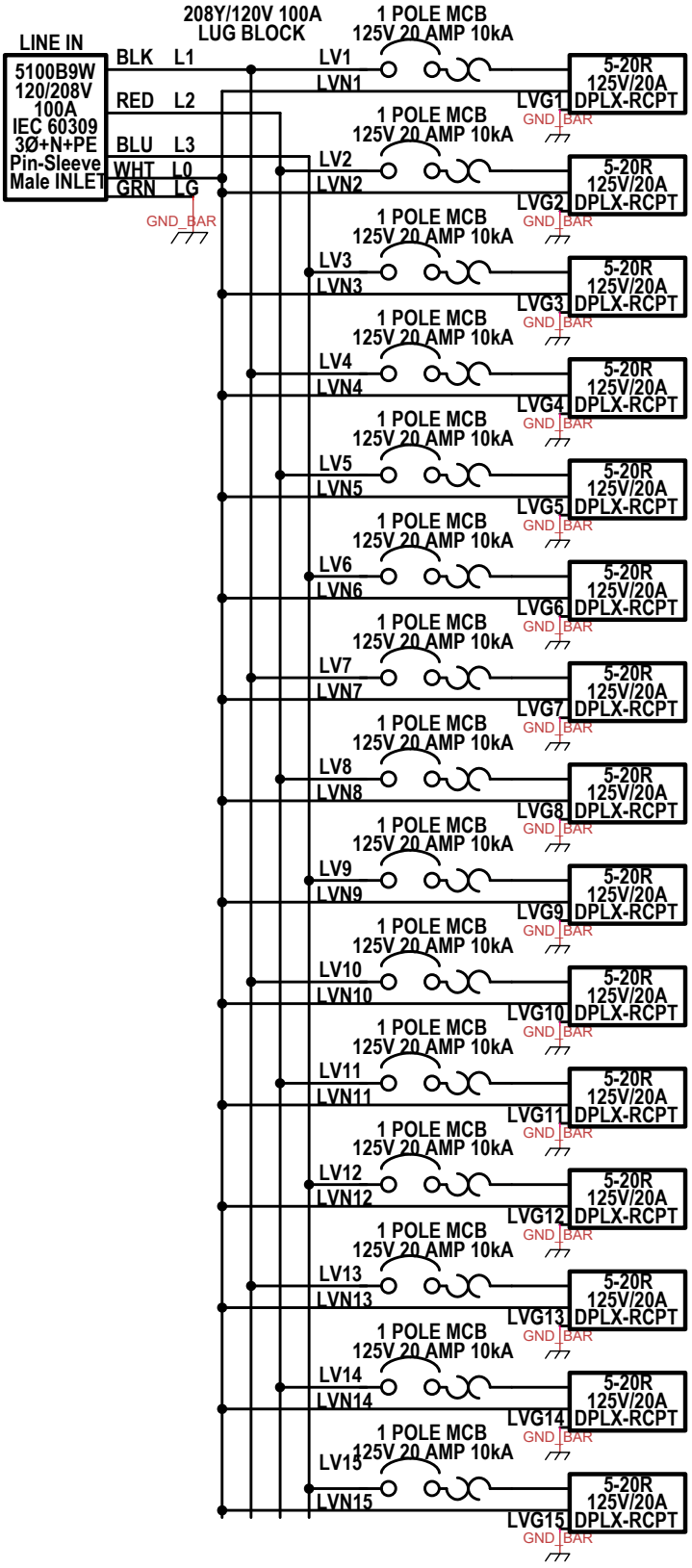

WIRE LEGEND

ID	TYPE	DESCRIPTION	WIRE SIZE
L1	CABLE	600V THHN BLACK	#2 AWG cu
L2	CABLE	600V THHN RED	#2 AWG cu
L3	CABLE	600V THHN BLUE	#2 AWG cu
L0	CABLE	600V THHN WHITE	#2 AWG cu
LG	CABLE	600V THHN GREEN	#8 AWG cu
LV1	CABLE	600V THHN BLACK	#12 AWG cu
LV2	CABLE	600V THHN RED	#12 AWG cu
LV3	CABLE	600V THHN BLUE	#12 AWG cu
LV4	CABLE	600V THHN BLACK	#12 AWG cu
LV5	CABLE	600V THHN RED	#12 AWG cu
LV6	CABLE	600V THHN BLUE	#12 AWG cu
LV7	CABLE	600V THHN BLACK	#12 AWG cu
LV8	CABLE	600V THHN RED	#12 AWG cu
LV9	CABLE	600V THHN BLUE	#12 AWG cu
LV10	CABLE	600V THHN BLACK	#12 AWG cu
LV11	CABLE	600V THHN RED	#12 AWG cu
LV12	CABLE	600V THHN BLUE	#12 AWG cu
LV13	CABLE	600V THHN BLACK	#12 AWG cu
LV14	CABLE	600V THHN RED	#12 AWG cu
LV15	CABLE	600V THHN BLUE	#12 AWG cu
LVG1	CABLE	600V THHN GREEN	#12 AWG cu
LVG2	CABLE	600V THHN GREEN	#12 AWG cu
LVG3	CABLE	600V THHN GREEN	#12 AWG cu
LVG4	CABLE	600V THHN GREEN	#12 AWG cu
LVG5	CABLE	600V THHN GREEN	#12 AWG cu
LVG6	CABLE	600V THHN GREEN	#12 AWG cu
LVG7	CABLE	600V THHN GREEN	#12 AWG cu
LVG8	CABLE	600V THHN GREEN	#12 AWG cu
LVG9	CABLE	600V THHN GREEN	#12 AWG cu
LVG10	CABLE	600V THHN GREEN	#12 AWG cu
LVG11	CABLE	600V THHN GREEN	#12 AWG cu
LVG12	CABLE	600V THHN GREEN	#12 AWG cu
LVG13	CABLE	600V THHN GREEN	#12 AWG cu
LVG14	CABLE	600V THHN GREEN	#12 AWG cu
LVG15	CABLE	600V THHN GREEN	#12 AWG cu
LVN1	CABLE	600V THHN WHITE	#12 AWG cu
LVN2	CABLE	600V THHN WHITE	#12 AWG cu
LVN3	CABLE	600V THHN WHITE	#12 AWG cu
LVN4	CABLE	600V THHN WHITE	#12 AWG cu
LVN5	CABLE	600V THHN WHITE	#12 AWG cu
LVN6	CABLE	600V THHN WHITE	#12 AWG cu
LVN7	CABLE	600V THHN WHITE	#12 AWG cu
LVN8	CABLE	600V THHN WHITE	#12 AWG cu
LVN9	CABLE	600V THHN WHITE	#12 AWG cu
LVN10	CABLE	600V THHN WHITE	#12 AWG cu
LVN11	CABLE	600V THHN WHITE	#12 AWG cu
LVN12	CABLE	600V THHN WHITE	#12 AWG cu
LVN13	CABLE	600V THHN WHITE	#12 AWG cu
LVN14	CABLE	600V THHN WHITE	#12 AWG cu
LVN15	CABLE	600V THHN WHITE	#12 AWG cu

Title: MPD-CS5-309.100AB-YT0-Z-15.N09-M1		
Author: David Downs		
File:)V 100A 3PH MLO 15x5-20R Inlet=5100B9W.dsn		Document
Revision: 1.0	Date: 07/10/2024	Sheets: 1 of 1

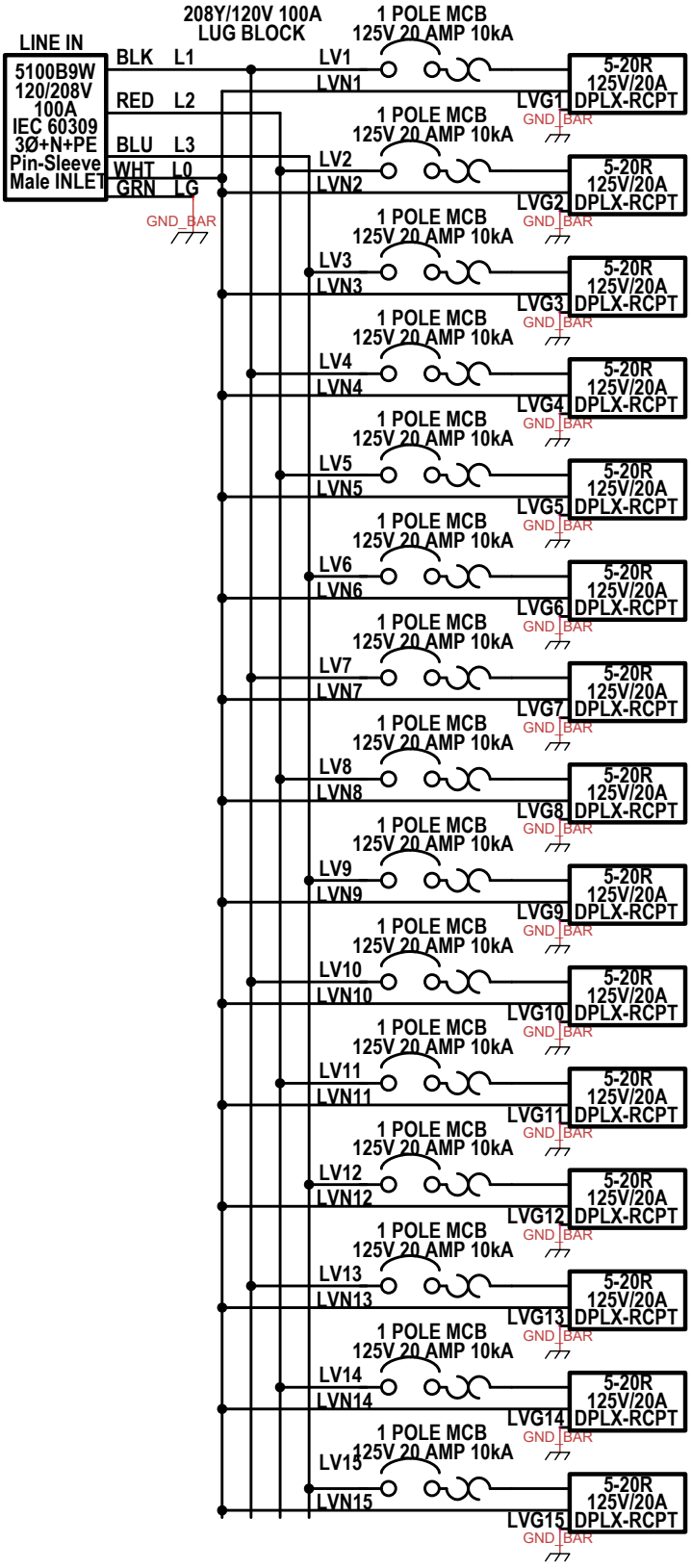

WIRE LEGEND

ID	TYPE	DESCRIPTION	WIRE SIZE
L1	CABLE	600V THHN BLACK	#2 AWG cu
L2	CABLE	600V THHN RED	#2 AWG cu
L3	CABLE	600V THHN BLUE	#2 AWG cu
L0	CABLE	600V THHN WHITE	#2 AWG cu
LG	CABLE	600V THHN GREEN	#8 AWG cu
LV1	CABLE	600V THHN BLACK	#12 AWG cu
LV2	CABLE	600V THHN RED	#12 AWG cu
LV3	CABLE	600V THHN BLUE	#12 AWG cu
LV4	CABLE	600V THHN BLACK	#12 AWG cu
LV5	CABLE	600V THHN RED	#12 AWG cu
LV6	CABLE	600V THHN BLUE	#12 AWG cu
LV7	CABLE	600V THHN BLACK	#12 AWG cu
LV8	CABLE	600V THHN RED	#12 AWG cu
LV9	CABLE	600V THHN BLUE	#12 AWG cu
LV10	CABLE	600V THHN BLACK	#12 AWG cu
LV11	CABLE	600V THHN RED	#12 AWG cu
LV12	CABLE	600V THHN BLUE	#12 AWG cu
LV13	CABLE	600V THHN BLACK	#12 AWG cu
LV14	CABLE	600V THHN RED	#12 AWG cu
LV15	CABLE	600V THHN BLUE	#12 AWG cu
LVG1	CABLE	600V THHN GREEN	#12 AWG cu
LVG2	CABLE	600V THHN GREEN	#12 AWG cu
LVG3	CABLE	600V THHN GREEN	#12 AWG cu
LVG4	CABLE	600V THHN GREEN	#12 AWG cu
LVG5	CABLE	600V THHN GREEN	#12 AWG cu
LVG6	CABLE	600V THHN GREEN	#12 AWG cu
LVG7	CABLE	600V THHN GREEN	#12 AWG cu
LVG8	CABLE	600V THHN GREEN	#12 AWG cu
LVG9	CABLE	600V THHN GREEN	#12 AWG cu
LVG10	CABLE	600V THHN GREEN	#12 AWG cu
LVG11	CABLE	600V THHN GREEN	#12 AWG cu
LVG12	CABLE	600V THHN GREEN	#12 AWG cu
LVG13	CABLE	600V THHN GREEN	#12 AWG cu
LVG14	CABLE	600V THHN GREEN	#12 AWG cu
LVG15	CABLE	600V THHN GREEN	#12 AWG cu
LVN1	CABLE	600V THHN WHITE	#12 AWG cu
LVN2	CABLE	600V THHN WHITE	#12 AWG cu
LVN3	CABLE	600V THHN WHITE	#12 AWG cu
LVN4	CABLE	600V THHN WHITE	#12 AWG cu
LVN5	CABLE	600V THHN WHITE	#12 AWG cu
LVN6	CABLE	600V THHN WHITE	#12 AWG cu
LVN7	CABLE	600V THHN WHITE	#12 AWG cu
LVN8	CABLE	600V THHN WHITE	#12 AWG cu
LVN9	CABLE	600V THHN WHITE	#12 AWG cu
LVN10	CABLE	600V THHN WHITE	#12 AWG cu
LVN11	CABLE	600V THHN WHITE	#12 AWG cu
LVN12	CABLE	600V THHN WHITE	#12 AWG cu
LVN13	CABLE	600V THHN WHITE	#12 AWG cu
LVN14	CABLE	600V THHN WHITE	#12 AWG cu
LVN15	CABLE	600V THHN WHITE	#12 AWG cu

Title: MPD-CS5-309.100AB-YT0-Z-15.N09-M1		
Author: David Downs		
File:)V 100A 3PH MLO 15x5-20R Inlet=5100B9W.dsn		Document
Revision: 1.0	Date: 07/10/2024	Sheets: 1 of 1

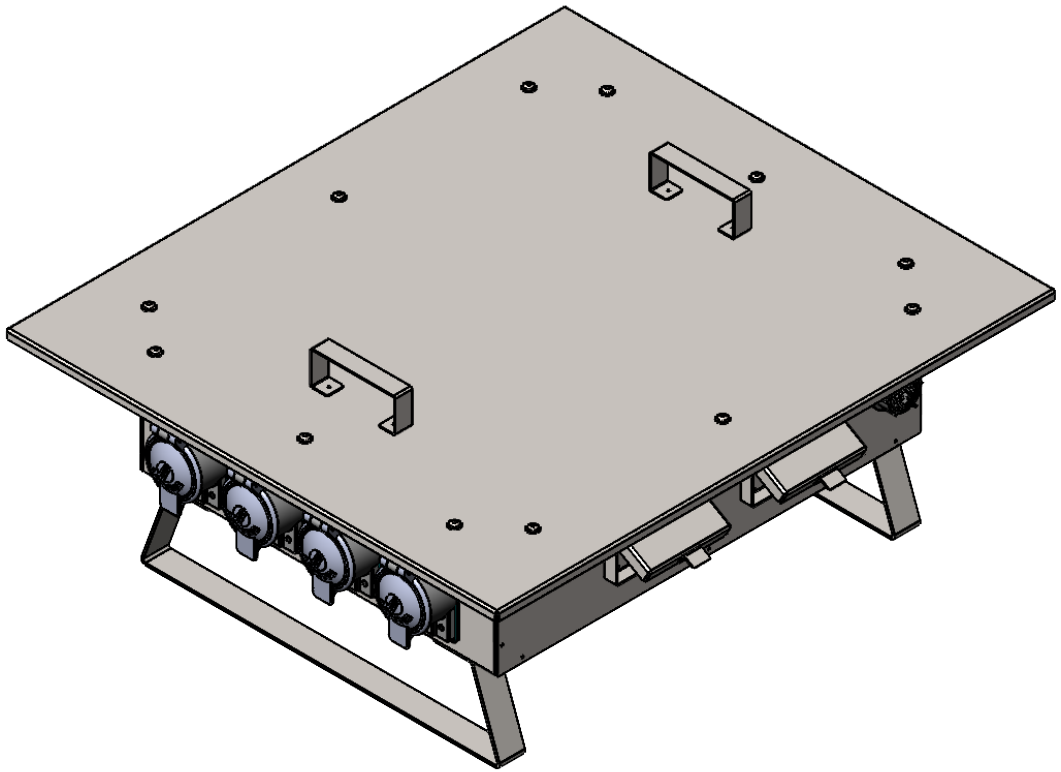

LARSON ELECTRONICS

PART NUMBER:

MPD-CS5-309.100AB-YT0-Z-15.N09-M1

SIZE		REV
A		**1**

SCALE: NTS | SHEET 1 OF 3

DATE 7/23/2024

DO NOT SCALE DRAWING

DIMENSIONS ARE IN INCHES

UNLESS OTHERWISE NOTED:

Angle	+/- .5 deg
.X	+/- .02
.XX	+/- .01
.XXX	+/- .005

PROPRIETARY AND CONFIDENTIAL

THE INFORMATION CONTAINED IN THIS DRAWING IS THE SOLE PROPERTY OF LARSON ELECTRONICS LLC. ANY REPRODUCTION IN PART OR AS A WHOLE WITHOUT THE WRITTEN PERMISSION OF LARSON ELECTRONICS LLC IS PROHIBITED.

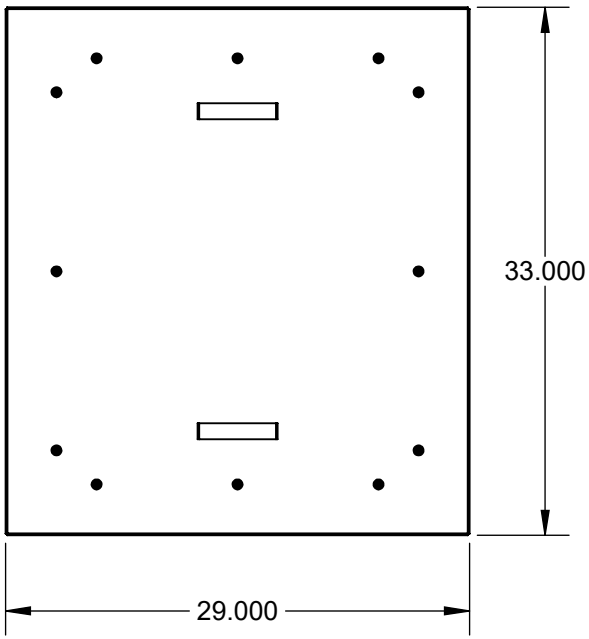

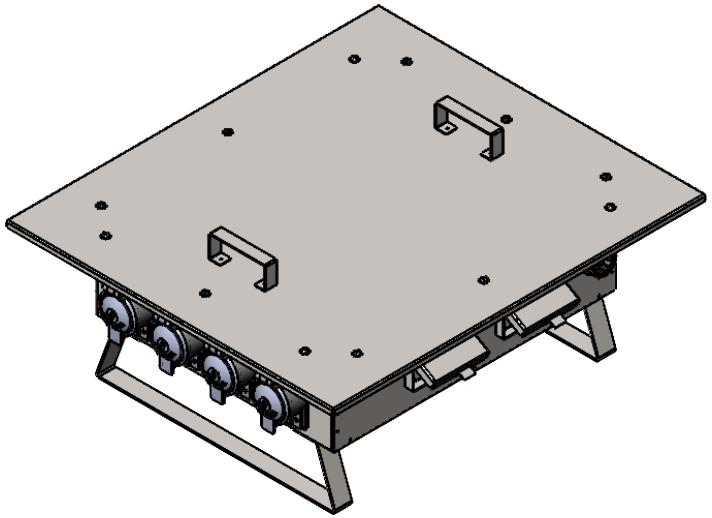

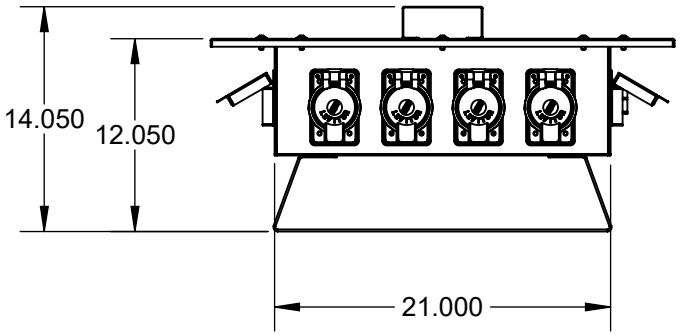

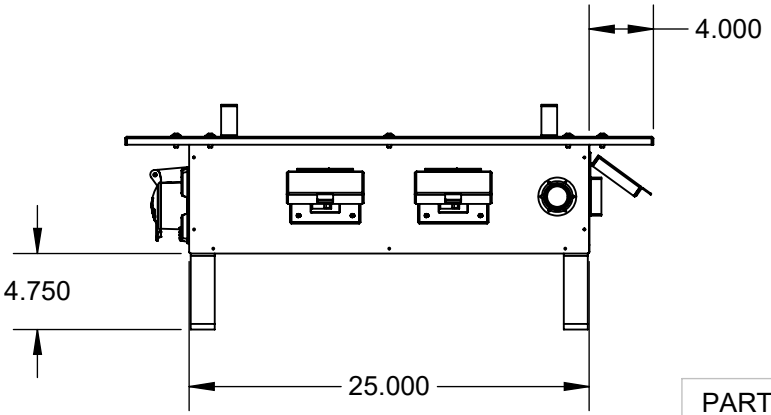

LARSON ELECTRONICS

PART NUMBER:

MPD-CS5-309.100AB-YT0-Z-15.N09-M1

SIZE		REV
A		**1**

PROPRIETARY AND CONFIDENTIAL
THE INFORMATION CONTAINED IN THIS DRAWING IS THE SOLE PROPERTY OF LARSON ELECTRONICS LLC. ANY REPRODUCTION IN PART OR AS A WHOLE WITHOUT THE WRITTEN PERMISSION OF LARSON ELECTRONICS LLC IS PROHIBITED.

UNLESS OTHERWISE NOTED:

Angle	+/- .5 deg
.X	+/- .02
.XX	+/- .01
.XXX	+/- .005

DIMENSIONS ARE IN INCHES

DO NOT SCALE DRAWING | DATE 7/23/2024 | SCALE: NTS | SHEET 2 OF 3


LARSON
ELECTRONICS
Suitable for Use
in Damp Locations
Enclosure Type 3R
LARSONELECTRONICS.COM
1-800-369-6671
sales@larsonelectronics.com
30A 250V
GFI Protected


GFI Protected
GFI Protected
GFI Protected

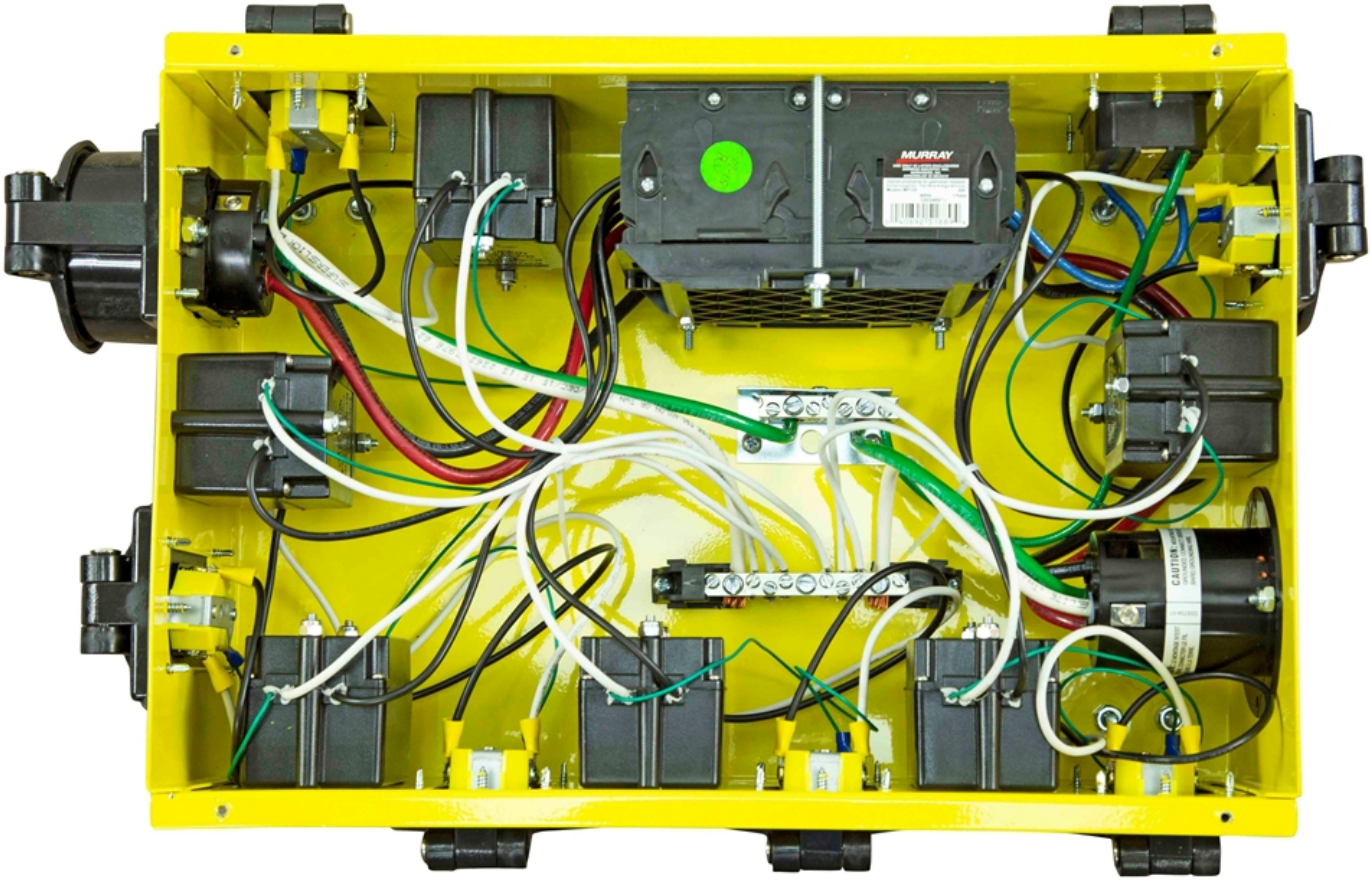
MURRAY


GFI Protected

Certification

Manufacturer: Larson Electronics LLC
Address: 9419 US-HWY 175
Kemp, Texas 75143

Declare the following equipment conforms to the standard(s) as listed:

Model: MGL, MPD, MGS, WAL Series
Description: Power Distribution Systems

Evaluated Listings:

ETL: UL 1640 - NEC / United States standards
ETL: CAN/CSA-C22.2 No. 14 – CEC / Canada standards

The MGL, MPD, MGS, WAL Series are certified to NEC and CEC standards for power distribution systems. These units are constructed using individual components certified to NEC and CEC standards, and are built to UL 1640 and CAN/CSA C22.2 No 14.

Signed for and on behalf of: Larson Electronics, LLC
Place of issue: Kemp, TX
Date of issue: September 11, 2019

Signature: James Thomas

Name: James Thomas
Position: Operations Manager

LARSON ELECTRONICS LLC • 9419 E US HWY 175 • KEMP, TX 75143
p: 1-800-369-6671 • intl: 903-498-3363 • f: 903-498-3364 • sales@larsonelectronics.com

Certification

Manufacturer: Larson Electronics LLC
Address: 9419 US-HWY 175
Kemp, Texas 75143

Declare the following equipment conforms to the statements(s) as listed:

Model: MGL, MPD, MGS, WAL Series
Description: Power Distribution Systems

The MGL, MPD, MGS, WAL Series from Larson Electronics LLC utilize components certified to NEC and CEC standards. Larson Electronics LLC specifies wiring device standard designations (e.g. NEMA 5-20R, NEMA L6-30R, CS8265C) in the electrical diagrams and spec sheet of each product. Unless specified, the brands of components used, which may vary based on availability at the time of build, include but are not limited to: Hubbell, Leviton, Molex, Daniel Woodhead, Legrand, Eaton, Thomas & Betts, Russel Stroll, Meltric, Mennekes, ABB Group, Emerson, Appleton, Crouse Hinds, Killark, R.Stahl, or other certified equipment manufacturers.

Signed for and on behalf of: Larson Electronics, LLC
Place of issue: Kemp, TX

Signature: James Thomas

Name: James Thomas
Position: Operations Manager

LARSON ELECTRONICS LLC • 9419 E US HWY 175 • KEMP, TX 75143
p: 1-800-369-6671 • intl: 903-498-3363 • f: 903-498-3364 • sales@larsonelectronics.com

TECHNICAL INFORMATION

POWDURA® POLYESTER TGIC
POWDER COATING

PRODUCT DESCRIPTION

PLR2-60002
RAL 5010 GENT BLUE

POWDURA® Polyester TGIC Powder Coatings are recommended for a broad range of interior/exterior functional and decorative applications.

Advantages:

- Provides excellent overbake resistance
- Good chemical resistance
- Very good outdoor exposure qualities
- Wide range of special effects available
- Available in a broad range of colors

Many applications, including:
Steel Furniture
Refrigeration
Electronic Cabinetry
Scaffolding
Electrical Equipment
Instrument Housings

Appliances
Sporting Goods

Storage: Powdura® Powder Coatings should be kept in a dry and cool area at temperatures below 80°F (27°C). When not in use, store powder in sealed containers: fine powders are hygroscopic.

Substrate Preparation: Substrate should be free of grease, oil, dirt, fingerprints, drawing compounds, any contamination, and surface preparation treatments to ensure optimum adhesion and coating performance properties. The use of a chemical conversion coating prior to the application of a powder coating is strongly recommended.

Testing: Due to the wide variety of substrates, surface preparation methods, application methods, and environments, the customer should test the complete system for adhesion, compatibility and performance prior to full-scale application.

CAUTIONS

Thoroughly review product SDS prior to using this product. Please consult your local sales representative or your local Sherwin-Williams facility for additional information.

Special Advisory: River texture type finishes are unique finishes that may vary with application, film thickness and cure conditions. Light colors and very dark colors may occasionally show colored specks that appear as contamination. This is the nature of this type of finish and cannot be predicted or controlled. Thorough cleaning is required when switching to a normal smooth powder coating to prevent craters in the smooth finish.

APPLICATION

Cure Schedule:	10 MIN @ 400F
Film Thickness Range(mils):	3.0-5.0

ATTRIBUTES

Specific Gravity(g/ml):	1.72
Coverage at 1.0 Mil(ft^2/lb):	112.4
60° Gloss: (ASTM D-523)	15-30
Adhesion: (ASTM D-3359)	5B
Flexibility: (ASTM D-522)	Pass 1/8"
Pencil Hardness: (ASTM D-3363)	H-2H
Impact Resistance(in.lb): (ASTM D-2794)	Dir 100 in-lbs Rev 100 in-lbs

Note: Performance measured using 24-gauge Bonderite® 1000 test panels.

Shelf Life:	12 Months

Sherwin-Williams recommends that all material be used in FIFO order (first in - first out). Materials that exceed the recommended shelf life should be tested prior to use.

Note:
Product Data Sheets are periodically updated to reflect new information relating to the product. It is important that the customer obtain the most recent Product Data Sheet for the product being used. The information, rating and opinions stated above pertain to the material currently offered and represent the results of tests believed to be reliable. However, due to variations in customer handling and methods of application, which are not known, or under our control, The Sherwin-Williams Company cannot make any warranties or guaranties as to the end results.

08 00

Grove City Product Mod

24-Mar-2020

Material Safety Data Sheet

To Whom It May Concern,

Larson Electronics LLC MGL, MPD, MGS, WAL Series industrial line of portable power distribution systems are considered "ARTICLES" under 29 CFR 1910-1200, the OSHA Hazard Communication Standard, and do not require a Material Safety Data Sheet (MSDS).

Articles are specifically exempt from the regulations of this standard. OSHA defines an article as follows:

1910-1200(c) – Article means a manufactured item other than a fluid or particle:

i. Which is formed to a specific shape or design during manufacture;
ii. Which has end use function(s) dependent in whole or in part upon its shape or design during end use; and
iii. Which under normal conditions does not release more than very small quantities.

Regards,

Ray Smith
Larson Electronics, LLC.

LARSON ELECTRONICS LLC • 9419 E US HWY 175 • KEMP, TX 75143
p: 1-800-369-6671 • intl: 903-498-3363 • f: 903-498-3364 • sales@larsonelectronics.com

<- Back

Product Description

Title:	STAGE & STUDIO PORTABLE WIRING COMPARTMENTS
Company:	LARSON ELECTRONICS LLC - Kemp, TX USA
Product Information:	Power Distribution System, Model Nos. MGL, MPD, MGS, WAL series; Followed by AAK-PBB.FFF-SCC.GGG-EEXCCC.DDD; Where AA = 2,3,5,7,9,15,20,25,30,45,50,75; BB = 1P, 3P; FFF = 480,240,208,120; CC = 1P,3P; GGG = 480,240,208,120; EE = # of outlets; CCC = voltage; DDD = outlet amperage.
Evaluated to the following:	A representative sample of the listed devices have been tested, investigated and found to comply with the requirements of the Standard(s) for Stage & Studio Portable Wiring Compartments (UL-1640) and are identified with the ETL Listed Mark.

<- Back

Contact Us

Americas+1-888-347-5478
(or +1-312-906-7801)
Email
dirlist@intertek.com

Intertek Home
Product Directories

Inspector Center

Get up-to-date information on everything from our Accreditations to our Certifications and Marks. Learn more...

News

Intertek Unveils New Design for Product Safety and Quality Certification Marks. Learn more...

© 2010 Intertek All Rights Reserved.
All other product or service names are the property of their respective owners.

intertek
Total Quality. Assured.



<- Back

Product Description

Title:	INDUSTRIAL CONTROL EQUIPMENT
Company:	LARSON ELECTRONICS LLC - Kemp, TX USA
Product Information:	Industrial Control Panels For General Use. Power Distribution System, Model Nos. MGL, MPD, MGS series; Followed by AAK-PBB.FFF-SCC.GGG-EEXCCC.DDD; Where AA = 2,3,5,7,9,15,20,25,30,45,50,75; BB = 1P, 3P; FFF = 480,240,208,120; CC = 1P,3P; GGG = 480,240,208,120; EE = # of outlets; CCC = voltage; DDD = outlet amperage.
Evaluated to the following:	A representative sample of the listed devices have been tested, investigated and found to comply with the requirements of the Standard(s) for Industrial Control Equipment (CAN/CSA-C22.2 No. 14) and are identified with the cETL Listed Mark.

<- Back

Contact Us

ETL listed products that are in doubt or for products that do not appear in the directory, please request a verification of certification.
Americas+1-888-347-5478 (or +1-847-660-7407)
Email
etldirectory@intertek.com

Intertek Home
Product Directories
DLP on mobile devices

Inspector Center

Get up-to-date information on everything from our Accreditations to our Certifications and Marks. Learn more...

News

Intertek Unveils New Design for Product Safety and Quality Certification Marks. Learn more...

© 2010 Intertek All Rights Reserved.
All other product or service names are the property of their respective owners.

Certification

Manufacturer: Larson Electronics LLC
Address: 9419 US-HWY 175
Kemp, Texas 75143

Declare the following equipment conforms to the standard(s) as listed:

Model: MGL, MPD, MGS, WAL Series
Description: Power Distribution Systems

The MGL, MPD, MGS, WAL series complies with the below standards set forth by the listed Association's requirements. Purchased and manufactured components are evaluated to Larson Electronics LLC Quality Control Management system per ISO 9001:2015. This certification applies to all specimens manufactured in accordance to the manufacture's drawings.

Evaluated Standards:

AISC: Structural steel skid design
NFPA 70: National Electrical Code
ASTM A36: Standard Specification for Carbon Structural Steel
ASTM A123: Standard Specification for Zinc (Hot-Dip Galvanized) Coatings on Iron and Steel Products
ASTM A153: Standard Specification for Zinc Coating (Hot-Dip) on Iron and Steel Hardware
ASTM A489: Standard Specification for Carbon Steel Lifting Eyes
ASTM A502: Standard Specification for Rivets, Steel, Structural
ASTM A563: Standard Specification for Carbon and Alloy Steel Nuts
ASTM A500: Standard Specification for Cold-Formed Welded and Seamless Carbon Steel Structural Tubing in Rounds and Shapes
ASTM B172: Standard Specification for Rope-Lay-Stranded Copper Conductors Having Bunch-Stranded Members, for Electrical Conductors
ASTM D7803: Standard Practice for Preparation of Zinc (Hot-Dip Galvanized) Coated Iron and Steel Product and Hardware Surfaces for Powder Coating
SAE J429: Mechanical and Material Requirements for Externally Threaded Fasteners
AWS D1.1: Structural Welding – Steel
ICEA S-58-679: Standard for Control, Instrumentation and Thermocouple Extension Conductor Identification
ICEA S-75-381: Portable and Power Feeder Cables for Use in Mines and Similar Applications
NEMA OFP 1-2017: Protection of Receptacle Outlets in Wet Locations According to the National Electrical Code

LARSON ELECTRONICS LLC • 9419 E US HWY 175 • KEMP, TX 75143
p: 1-800-369-6671 • intl: 903-498-3363 • f: 903-498-3364 • sales@larsonelectronics.com

NEMA PB 1-2011: Panelboards
NEMA ST 20-2014: Dry Type Transformers for General Applications
NEMA WD 1-1999 (R2015): General Color Requirements for Wiring Devices
ANSI C80.1-2015: American National Standard for Electric Rigid Steel Conduit
ANSI C119.4-2016: American National Standard for Electric Connectors
ANSI Z535.4-2011: American National Standard for Product Safety Signs and Labels
ANSI/IEC 60529-2004 (R2011): American National Standard for Degrees of Protection Provided by Enclosures (IP Code)

Signed for and on behalf of: Larson Electronics, LLC
Place of issue: Kemp, TX

Signature: James Thomas

Name: James Thomas
Position: Operations Manager

LARSON ELECTRONICS LLC • 9419 E US HWY 175 • KEMP, TX 75143
p: 1-800-369-6671 • intl: 903-498-3363 • f: 903-498-3364 • sales@larsonelectronics.com

Certification

Manufacturer: Larson Electronics LLC
Address: 9419 US-HWY 175
Kemp, Texas 75143

Declare the following equipment conforms to the standard(s) as listed:

Model: MGL, MPD, MGS, WAL Series
Description: Power Distribution Systems

Evaluated Listings:

CE: DIRECTIVE 2014/35/EU - LOW VOLTAGE DIRECTIVE
CE: DIRECTIVE 2014/30/EU - EMC DIRECTIVE
CE: Regulation (EC) No 1907/2006 - REACH REGULATION
CE: DIRECTIVE 2015/863/EU - ROHS DIRECTIVE

The MGL, MPD, MGS, WAL series complies with the essential protection requirements of the European Parliament of the Council Directive for Low Voltage Directive, EMC Directive, REACH Regulation, and RoHS Directive. This certification applies to all specimens manufactured in accordance to the manufacture's drawings.

Signed for and on behalf of: Larson Electronics, LLC
Place of issue: Kemp, TX

Signature: James Thomas

Name: James Thomas
Position: Operations Manager

LARSON ELECTRONICS LLC • 9419 E US HWY 175 • KEMP, TX 75143
p: 1-800-369-6671 • intl: 903-498-3363 • f: 903-498-3364 • sales@larsonelectronics.com

Certification

Manufacturer: Larson Electronics LLC
Address: 9419 US-HWY 175
Kemp, Texas 75143

Declare the following equipment conforms to the standard(s) as listed:

Model: MGL, MPD, MGS, WAL Series
Description: Power Distribution Systems

Evaluated Listings:

CE: Regulation (EC) No 1907/2006 - REACH REGULATION
CE: DIRECTIVE 2015/863/EU - ROHS DIRECTIVE

This is to certify that products offered by Larson Electronics LLC comply with the Reduction of Hazardous Substances (RoHS) directives. Directive 2002/95/EC became effective on 1 July 2006. It restricts the use of six substances in the manufacture of electrical and electronic equipment. This directive was revised in June 2011 and is now referred to as directive 2011/65/EU. Directive 2015/863/EU amending Annex II to Directive 2011/65/EU announced plans to add four substances from 22 July 2019.

We hereby certify that the equipment specified above conforms to the Directive(s) by containing less of the restricted substances than the stated limits.

Signed for and on behalf of: Larson Electronics, LLC
Place of issue: Kemp, TX

Signature: James Thomas

Name: James Thomas
Position: Operations Manager

LARSON ELECTRONICS LLC • 9419 E US HWY 175 • KEMP, TX 75143
p: 1-800-369-6671 • intl: 903-498-3363 • f: 903-498-3364 • sales@larsonelectronics.com

Certification

Manufacturer: Larson Electronics LLC
Address: 9419 US-HWY 175
Kemp, Texas 75143

Declare the following equipment conforms to the standard(s) as listed:

Model: MGL, MPD, MGS, WAL Series
Description: Power Distribution Systems

Evaluated Listings:

CE: Regulation (EC) No 1907/2006 - REACH REGULATION

This letter establishes the opinion of Larson Electronics LLC regarding the status, under the current European Union (“EU”) Regulations on Registration, Evaluation, Authorization, and Restriction of Chemical Substances (“REACH”).

REACH does not apply to manufactured products which are referred to as “completed articles”. Substances (chemicals) are subject to REACH registration, NOT products.

In addition, Articles are exempt from the REACH requirements if (a) the Article does not contain a substance of very high concern or candidate substance in an amount exceeding 0.1% weight by weight, and (b) if substances present in the Article in excess of 1 ton per year per importer are not expected nor intended to be released.

Based on communication with our raw material suppliers, we conclude that to the best of our knowledge our products requiring REACH compliance do not contain any of the currently listed SVHC in concentrations of 0.1% or above.

Accordingly, we foresee no registration or pre-registration requirement for the products we supply.

Signed for and on behalf of: Larson Electronics, LLC
Place of issue: Kemp, TX

Signature: James Thomas

Name: James Thomas
Position: Operations Manager

LARSON ELECTRONICS LLC • 9419 E US HWY 175 • KEMP, TX 75143
p: 1-800-369-6671 • intl: 903-498-3363 • f: 903-498-3364 • sales@larsonelectronics.com

Frequently Asked Questions (FAQ)