Larson Electronics LLC
9419 E US HWY 175, Kemp, TX 75143
Phone: 800.369.6671

www.LarsonElectronics.com
Email: sales@LarsonElectronics.com
Fax: 903.765.7664

## EPL-BHL-LP.12-LED-50C-BCE

# 26W Explosion Proof Bulkhead LED Light - Class I, II, III - 3,380 lms - Factory Sealed - 50' 16/3 SOOW w/ Blunt Cut End

**Product ID: 304150**



Image: EPL-BHL-LP.12-LED-50C-BCE

**Larson Electronics LLC manufactures a wide variety of products, including custom built to spec designs. The pictures displayed for this unit are a general representation of form factor for the product line and may not accurately represent this exact configuration in every detail due to custom builds and changes between similar products in our standard catalog. The specifics for this configuration are listed in the specification table and supporting documentation (CAD files, Dimensional Drawing, Name Plate Diagram, Wiring Diagram, etc.). This means that specific details (receptacles, plugs, wires, connections, mounting brackets, external finishes, etc.) may not be accurately represented in images vs specifications. Please review specifications and do not order based solely on images.**

**EPL-BHL-LP.12-LED-50C-BCE Explosion Proof Bulkhead LED Fixture**

**Listing:** NRTL Listed for United States and Canada
**Lamp Technology:** LED
**Dimensions:** 23.66"-L x 5.35"-W x 7.24"-H
**Weight:** 4.75 lb
**Voltage:** Universal 100-277V AC, 50/60Hz or 12-24V DC
**Total Watts:** 26W
**Lumens:** 3,380
**Luminous Efficacy:** 130 Lm/W
**Lamp Life:** 60,000+ Hours
**Color Temp:** 5000K, 4500K, or 3000K
**Color Rendering Index:** >75 CRI
**Lamp Type:** -
**Lamp Base:** -
**Replacement Lamp:** -
**Beam Angle:** 100° Horizontal, 140° Vertical
**Lighting Configuration:** Wide Flood Pattern
**Power Efficiency:** >95%
**Power Factor:** 0.992
**Amperage:** 0.44A @ 120V, 0.22 @ 240V, 0.19 @ 277V
**Ambient Operating Temp Range:** -50°C to +65°C
**Operating Temp Rating:** T6
**Housing Material:** Copper Free Cast Aluminum
**Lens Material:** Hardened Borosilicate Glass
**Mounting:** 3/4" Pendant & Swivel Mount - Both Ship w/ Fixture
**Wiring:** 50' 16/3 SOOW Cord w/ Blunt Cut End

**Ratings/Approvals**

Class I, Division 1 , Groups C and D
Class I, Division 2, Groups A, B, C, D
Class II, Divisions 1 & 2 Groups E, F and G
Class III, Divisions 1 & 2
T6 Temperature Rating
NRTL Certified to UL 844 Ed. 13
NRTL Certified to UL 1598
Certified to C22.2 No. 137 Rev 2014
Certified to C22.2 No. 250.0
Paint Spray Booth Approved
Factory Sealed Light Fixture

**Special Orders - Special Requirements**

Contact us for special requirements
**Toll Free:** 1-800-369-6671
**Intl:** 1-903-270-1187
**Fax:** 1-903-765-7664

**Wiring Hub:** 3/4" NPT

**E-mail:** sales@larsonelectronics.com

**The EPL-BHL-LP.12-LED-50C-BCE from Larson Electronics is an Explosion Proof Bulkhead LED Light that provides reliable illumination in rugged environments and combustible sites. This explosion proof LED light has a T6 temperature rating and is equipped with terminal strips for wiring. Protected by a copper-free aluminum housing, the LED unit can be installed in flammable areas where hazardous work and tasks are frequently conducted. For best results, operators can mount the light at low to medium heights. The EPL-BHL-LP.12-LED-50C-BCE is equipped with a C1D2 cord grip and 50 feet of 16/3 SOOW cord terminated in a blunt cut end.**

This explosion proof bulkhead fixture provides 3,380 lumens of high quality light while only drawing 26 watts. The copper free aluminum alloy body is powder coated for added durability and an attractive aesthetic appearance. Special heat dissipating design in conjunction with LED technology helps this fixture to achieve an excellent 60,000 hour rated lifespan with 80% lumen retention at the 60,000 hour mark. Light weight and a low profile make this unit an attractive alternative to larger and heavier older fixtures and requires less hardware to install.



Click Photo to Enlarge



Click Photo to Enlarge



Click Photo to Enlarge

Instead of using diffused glass, optics, or reflectors to distribute the light, Larson Electronics has positioned the boards within the fixture to provide a wide area light without sacrificing quality or light output. Two offset LED assemblies within the fixture allow this explosion proof linear lamp to provide a brilliant 100° horizontal beam spread and 140° vertical beam spread while achieving a 3,380 lumen output to maintain a small form factor. The LED assembly is protected behind a tempered borosilicate glass tube that is protected by an aluminum wire guard to prevent from accident damage to the light fixture.

Measuring only 5" in width, this fixture takes up half the surface area as a standard one foot explosion proof fixture. The surface mount fixture's overall height with adjustable surface mount bracket is under 4.5", including the surface mount bracket itself, making the EPL-BHL-LP.12-LED-50C-BCE one of the lowest profile explosion proof light fixtures on the market. When compared to our EPL-24-2L-T5HO fixture, the EPL-BHL-LP.12-LED-50C-BCE fixture produces twice the light output while taking up less than half the surface area. The EPL-BHL-LP.12-LED-50C-BCE is an ideal for applications with little space where low profile fixtures are required.

**LED Benefits:** Unlike gas burning and arc type lamps that have glass bulbs, LEDs have no filaments or fragile housings to break during operation and/or transportation. Instead of heating a small filament or using a combination of gases to produce light, light emitting diodes (LEDs) use semi-conductive materials that illuminate when electric current is applied, providing instant illumination with no warm up or cool down time before re-striking. Because there is no warm up

period, this light can be cycled on and off with no reduction in lamp life.

LED lights run at significantly cooler temperatures than traditional metal halide and high pressure sodium lights and contain no harmful gases, vapors, or mercury, making them both safer and more energy efficient. No extra energy is wasted in cooling enclosed work areas due to external heat emissions from bulb type lights, and the operator risks associated with traditional lighting methods, such as accidental burns and exposure to hazardous substances contained in the glass bulbs, are eliminated. In addition, LEDs are also safer for the environment as they are 100% recyclable, which eliminates the need for costly special disposal services required with traditional gas burning and arc type lamps.

This light is universal voltage capable and can be operated with 100-277V AC, 50/60Hz. We also offer a low voltage version of this fixture that operates on 12-24V DC. This explosion proof LED light fixture is IP67 rated, dust-proof, and protected against high pressure jets and temporary submersion. The cast aluminum body and LED lamp give this light excellent durability and resistance to vibration and impacts. The housing is specially designed to dissipate heat which increases the efficiency and lifespan of the LEDs and electronics.

**Wiring:** These LED light fixtures are equipped with 50 feet of 16/3 SOOW cord terminated in a blunt cut end. The cord is connected to the fixture via a C1D2 cord grip. This unit is a factory sealed fixture.

This LED light produces 3,380 lumens with a color temperature of 5000K and a color rendering index of 75 which produces colors and details much more accurately than high pressure sodium or mercury vapor luminaries. We also offer a 3000K warm white and 4500K natural white color temperature options (longer lead times may apply for non-standard temperatures). The EPL-BHL-LP.12-LED-50C-BCE is offered with pendant or surface mounting options.

**Adjustable Surface Mount Brackets:** Each L-shape bracket is machined with three holes per bracket to attach to the light fixture. The angle of the bracket is set by aligning the machined set screw holes on the mounting bracket with with index holes attached to the fixture. The bracket itself is mounted via two bolt hole at the top the bracket. There are two brackets, one on each end of the light. Once the brackets are mounted to a surface (ceiling, floor or wall), the light fixture can be removed from the brackets by removing the set screws that hold the bracket to the mounting bracket and adjusting the fixture. The fixture can be adjusted at 15° intervals.

**Suspension Mounting:** Pendant mount fixtures hang from the conduit and are suspended by rigid pipe. Each fixture features a 3/4" NPT junction box on one end, and a eyelet other end of the fixture. Operators bring rigid pipe down to the threaded mounting hub.

**Chain Hang Mounting:** Chain hang mount fixtures hang from the chains or metal rope. Two eyelets, one at each end of the fixture, allow operators to attach safety hooks to the fixture during installation. Operators bring flex conduit down to the threaded mounting hub.

**Suggested Applications:** Bulkhead lighting, outdoor locations, paint spray booths, aircraft maintenance, oil drilling rigs, refineries, solvent and cleaning areas, gas processing plants, chemical manufacturing, waste water treatment plants, gas processing plants, offshore applications, oil tankers, mud tanks, sand mines, mining, cold weather applications.

At Larson Electronics, we do more than meet your lighting needs. We also provide replacement, retrofit, and upgrade parts as well as industrial grade power accessories. Our craftsmen can custom build any lighting system and/or accessories to fit the unique demands of your operation. A commitment to honesty, quality, and dependability has made Larson Electronics a leader in the lighting and electronics business since 1973. Contact us today at 800-369-6671 or message sales@larsonelectronics.com for more information about our custom options tailored to meet your specific industry needs.

| REV | DESCRIPTION | DATE |
|---|---|---|
| A | PRODUCTION RELEASE | 11/22/2024 |

# EPL-BHL-LP.12-LED-50C-BCE
# -SFC-1227-30K

LARSON ELECTRONICS®

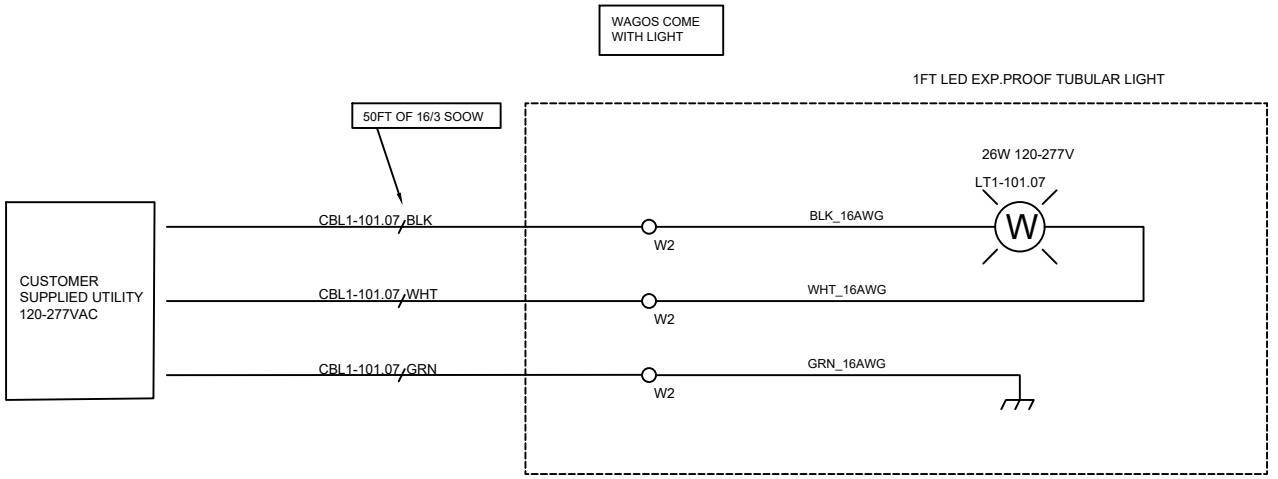


| TAGS | QTY | CATALOG | DESCRIPTION |
|---|---|---|---|
| LT1-101.07 | 1 | UNV0015630 | 1 foot LED explosion proof tubular light 120-277V 3000K |
| CBL1-101.07 | 1 | UNV00009083 | 16/3 SOOW CABLE UL 90C BLK |

LARSON ELECTRONICS

9419 E US HWY 175,
KEMP, TX 75143

TITLE: EPL-BHL-LP.12-LED-50C-BCE SFC-1227-30K

| DRAWN BY | DATE | REV |
|---|---|---|
| A.HIRSH | 11/22/2024 | A |
| CHECKED BY | SHEET # | DRAWING # |
| J.Maldonado | 1 OF 1 | 101 |

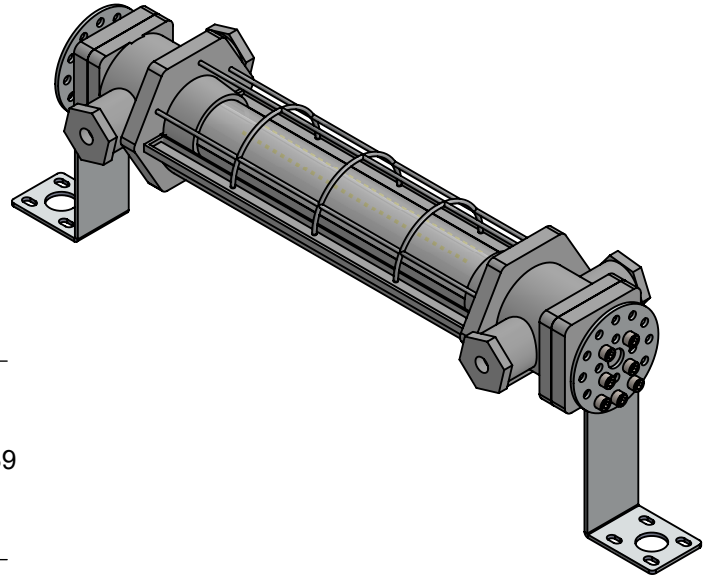

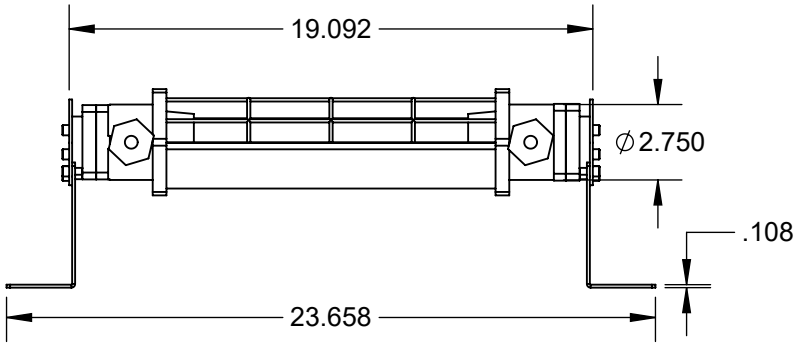


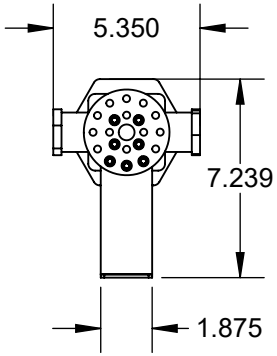


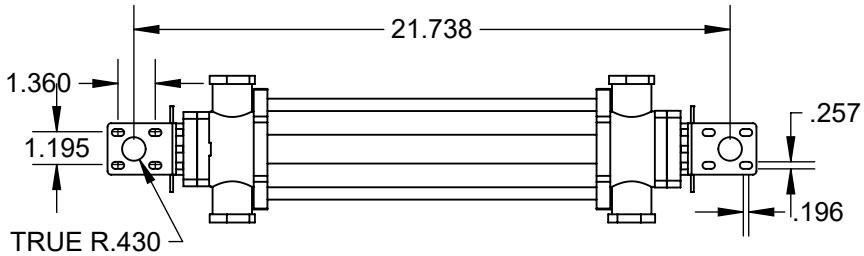


LARSON ELECTRONICS®

**PART NUMBER:**

# EPL-BHL-LP.12-LED-50C-BCE

| SIZE | | REV |
|---|---|---|
| A | | 1 |

| | | | | |
|---|---|---|---|---|
| DIMENSIONS ARE IN INCHES | | | | |
| DO NOT SCALE DRAWING | DATE | 10/13/2025 | SCALE: NTS | SHEET 1 OF 1 |

**PROPRIETARY AND CONFIDENTIAL**

THE INFORMATION CONTAINED IN THIS DRAWING IS THE SOLE PROPERTY OF LARSON ELECTRONICS LLC. ANY REPRODUCTION IN PART OR AS A WHOLE WITHOUT THE WRITTEN PERMISSION OF LARSON ELECTRONICS LLC IS PROHIBITED.

Larson Electronics LLC
9419 E US HWY 175, Kemp, TX 75143
Phone: 800.369.6671

www.LarsonElectronics.com
Email: sales@LarsonElectronics.com
Fax: 903.765.7664

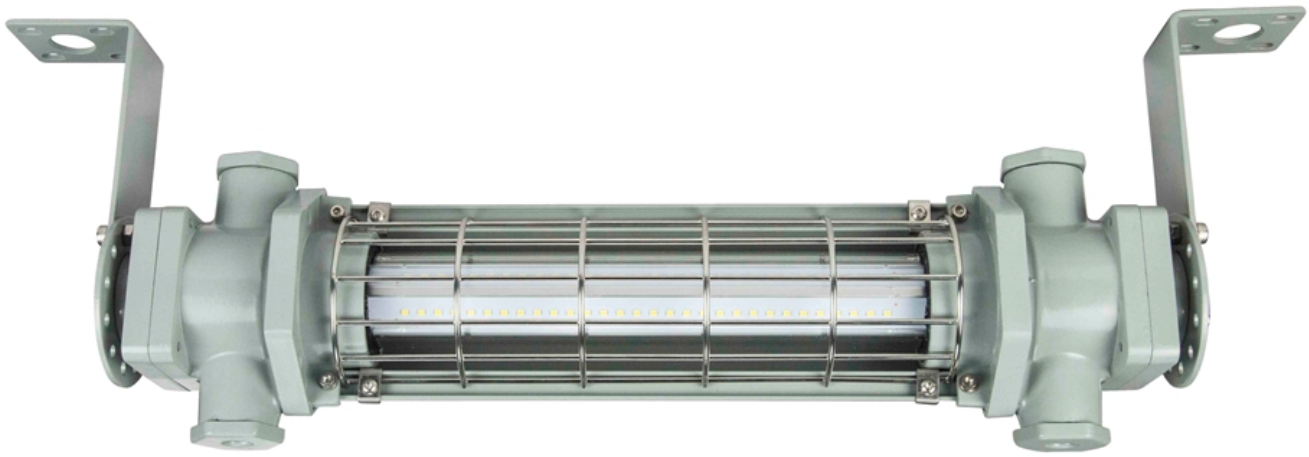

Larson Electronics LLC
9419 E US HWY 175, Kemp, TX 75143
Phone: 800.369.6671

www.LarsonElectronics.com
Email: sales@LarsonElectronics.com
Fax: 903.765.7664



Larson Electronics LLC
9419 E US HWY 175, Kemp, TX 75143
Phone: 800.369.6671

www.LarsonElectronics.com
Email: sales@LarsonElectronics.com
Fax: 903.765.7664



Larson Electronics LLC
9419 E US HWY 175, Kemp, TX 75143
Phone: 800.369.6671

www.LarsonElectronics.com
Email: sales@LarsonElectronics.com
Fax: 903.765.7664

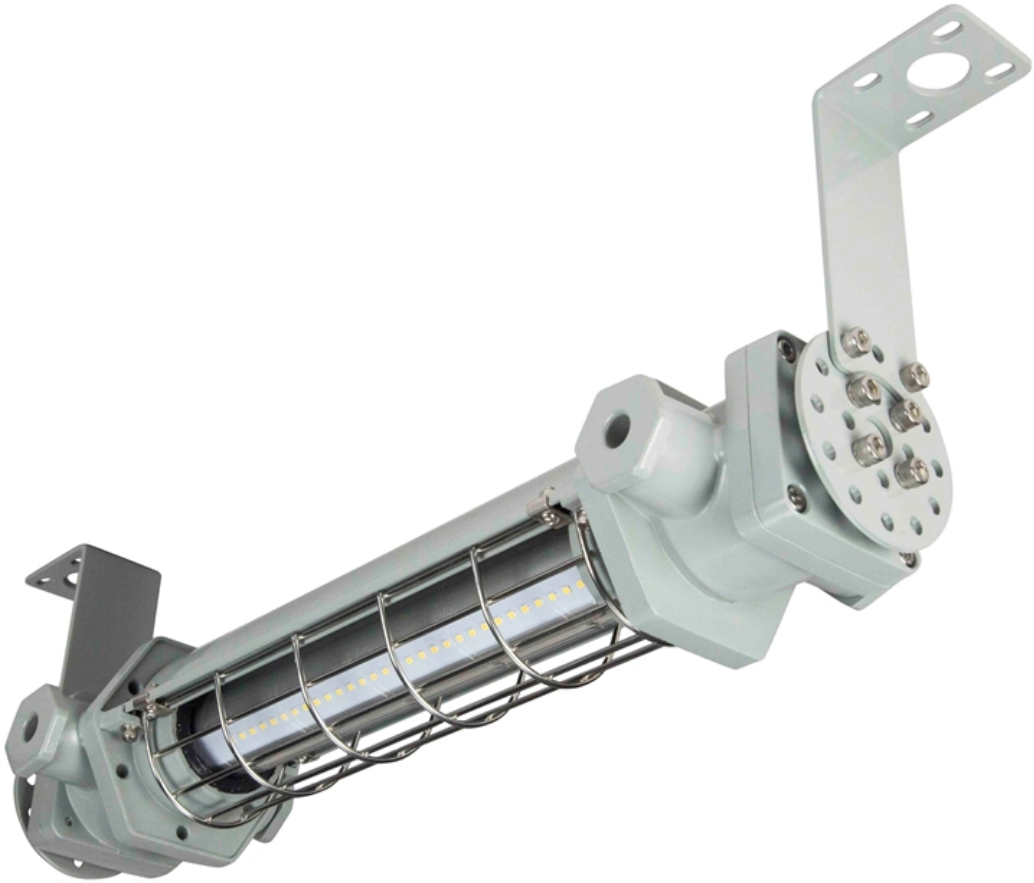

Larson Electronics LLC
9419 E US HWY 175, Kemp, TX 75143
Phone: 800.369.6671

www.LarsonElectronics.com
Email: sales@LarsonElectronics.com
Fax: 903.765.7664

# Frequently Asked Questions (FAQ)

There are no Faqs