Larson Electronics LLC
9419 E US HWY 175, Kemp, TX 75143
Phone: 800.369.6671

www.LarsonElectronics.com
Email: sales@LarsonElectronics.com
Fax: 903.498.3364

MPD-CM2-308.32AB-YK0-Z-3.R10-3.E72S-M1

Portable Power Distro, 400Y/230V Wye 3PH, 532P6S Line In w/ 10' 10/5 SOOW Cord, (3) 316R6S Pin/Sleeve Receptacles

Product ID: 300054



Larson Electronics LLC manufactures a wide variety of products, including custom built to spec designs. The pictures displayed for this unit are a general representation of form factor for the product line and may not accurately represent this exact configuration in every detail due to custom builds and changes between similar products in our standard catalog. The specifics for this configuration are listed in the specification table and supporting documentation (CAD files, Dimensional Drawing, Name Plate Diagram, Wiring Diagram, etc.). This means that specific details (receptacles, plugs, wires, connections, mounting brackets, external finishes, etc.) may not be accurately represented in images vs specifications. Please review specifications and do not order based solely on images.

MPD-CM2-308.32AB-YK0-Z-3.R10-3.E72S-M1 - Temporary Power Distribution System

Line-in Cord: 10' #10/5 AWG TYPE SOOW Cord [600V]
Line-in Cord Cap: 532P6S IEC 60309 32A Pin & Sleeve Male Plug [400Y/230V]
Primary Voltage (V): 400Y/230V AC Wye
Primary Phase (PH): 3-Phase (3PH)
Primary Frequency (HZ): 50-60 Hz (50-60-cycles)
Primary Panel: 400Y/230V 3PH 32A MLO IP44
Primary Breaker(s): (3) 16A 1P MCB [277V]
Primary Outlet(s): (3) 316R6S IEC 60309 16A Pin & Sleeve [230V]
Primary Protection: MCB Circuit Breakers
Transformer (KVA): N/A
Secondary Voltage (V): N/A
Secondary Phase (PH): N/A
Secondary Frequency (HZ): N/A
Secondary Panel: N/A
Secondary Breaker(s): N/A
Secondary Outlet(s): N/A
Secondary Protection: N/A
Form Factor: Blue Powder Coated Portable w/ Base Stand
Material: Steel
Finish: High-Strength TGIC Polyester Powder Coated Blue
Dimensions: N/A
Weight: N/A

Larson Electronics manufactures a wide variety of custom power distribution systems. The pictures displayed for this unit are a general representation of form factor and may not accurately represent this exact configuration in every detail due to being custom builds. The specifics for this configuration are listed in the specification table and one-line diagram.

Ratings

Max Primary OCP: 32A @ 400V
Max Secondary Output: N/A
NEMA 3R Indoor or Outdoor Use
Made in the USA
NRTL Certified to UL 1640
NRTL Certified to CSA C22.2 No. 14

Powder Coat Finish Standards:

Complies with ASTM D-523
Complies with ASTM D-3359
Complies with ASTM D-522
Complies with ASTM D-3363
Complies with ASTM D-2794

Special Orders - Requirements

Contact us for special requirements

Phone: 1-214-616-6180
Toll Free: 1-800-369-6671
Fax: 1-903-498-3364
E-mail: sales@larsonelectronics.com

All grounding shall comply with state and local codes and meet the minimum requirements of the National Electronic Code section 250

Made in Texas

The MPD-CM2-308.32AB-YK0-Z-3.R10-3.E72S-M1 from Larson Electronics is a Portable Power Distribution System that provides operators the ability to safely tap into and distribute three-phase 400Y/230V AC Wye power from a variety of sources including generators and direct grid power. This system carries a NEMA 3R rating for indoor and outdoor use.

PLEASE NOTE: ANY FREE SHIPPING OFFERS DO NOT APPLY TO POWER DISTRIBUTION PANELS, TRANSFORMERS, OR SUBSTATIONS*

The MPD-CM2-308.32AB-YK0-Z-3.R10-3.E72S-M1 temporary power distribution system gives operators the ability to power their three-phase 400 volt and 230 volt equipment from a single system.

Operation:

- Primary Voltage: 400Y/230V AC Wye 3PH
- Primary Panel: 400Y/230V 3PH 32A MLO IP44
- Primary Breaker(s): (3) 16A 1P MCB [277V]
- Primary Outlet(s): (3) 316R6S IEC 60309 16A Pin & Sleeve [230V]
- Transformer: N/A
- Secondary Voltage: N/A
- Secondary Panel: N/A
- Secondary Breaker(s): N/A
- Secondary Receptacles: N/A

*See specification table at the top of the page for more information about the power distribution system.

Protective Construction: The housing is constructed from powder coated steel with a NEMA 3R enclosure rating. The angled base and low center of gravity ensure this low voltage transform does not tip over when in the field. The entire unit is powder coated with glossy blue finish for corrosion resistance and aesthetics. The assembly is mounted atop four swivel polyurethane casters, two standard swivel and two locking swivel, aiding in transportation within the job site. The power distribution system is constructed of steel with a polyester powder coated blue finish for durability against dirt, moisture, and mild corrosion. This special coating creates a high-strength barrier for protection from accidental bumps and scratches. The TGIC polyester powder coat finish offers reliable resistance against chemicals, UV light (sun light) and degrading elements in outdoor locations. Our powder coating solution ensures robust color retention for many years without fading. Custom colors, such as black, grey, desert tan, or forest green, and galvanized finishes are available upon request. Non-standard powder coat colors or galvanized finishes may increase price and lead times.

Certification: All units are built in accordance to NFPA 70 (National Electric Code) and NRTL certified to UL 1640. All equipment is NEMA 3R rated for indoor and outdoor use and provide a degree of protection against dirt, water, and ice. NEMA 4 and NEMA 4X equipment can be equipped upon request.

Grounding: Transformer is grounded to the frame and we provide a grounding lug on the frame for the earth ground.

~Please check all motor loads for dual rated motors that will work 208 or 240.~

Applications: This power distribution system is ideal for indoor or outdoor use and applications including but not limited to, construction sites, plant maintenance, plant turnarounds, shows, exhibits, and shipyard operations. These power distribution systems are popularly used in applications where external power sources are often necessary. We also offer class rated transformers for use within explosion proof and hazardous location environments.

Custom Built Systems Available: Larson Electronics is a manufacturer and we can build portable power distribution systems to your specifications. Although we carry several models of portable power distribution systems in stock, we can deliver custom ordered units almost as quickly as our prebuilt units. If this model does not meet your needs, please contact us at 1-800-369-6671 or sales@larsonelectronics.com to discuss your specific requirements.

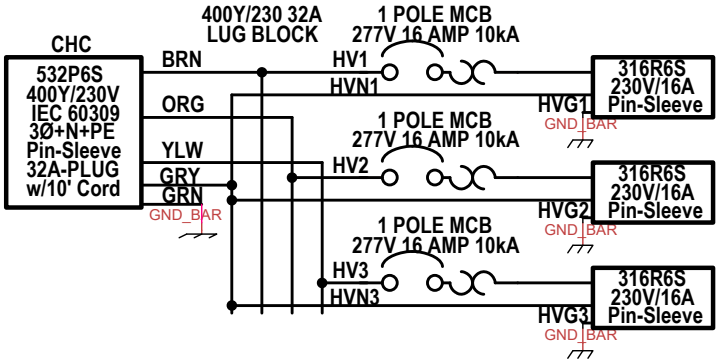

WIRE LEGEND

ID	TYPE	DESCRIPTION	WIRE SIZE
CHC	CORD	600V TYPE SOOW	#10/5 AWG cu
HV1	CABLE	600V THHN BROWN	#14 AWG cu
HV2	CABLE	600V THHN ORANGE	#14 AWG cu
HV3	CABLE	600V THHN YELLOW	#14 AWG cu
HVG1	CABLE	600V THHN GREEN	#14 AWG cu
HVG2	CABLE	600V THHN GREEN	#14 AWG cu
HVG3	CABLE	600V THHN GREEN	#14 AWG cu
HVN1	CABLE	600V THHN GRAY	#14 AWG cu
HVN2	CABLE	600V THHN GRAY	#14 AWG cu
HVN3	CABLE	600V THHN GRAY	#14 AWG cu

Title: MPD-CM2-308.32AB-YK0-Z-3.R10-3.E72S-M1		
Author: David Downs		
File: :30V 32A 3PH MLO 3x316R6S 10'C+532P6S.dsn		Document
Revision: 1.0	Date: 01/23/2024	Sheets: 1 of 1

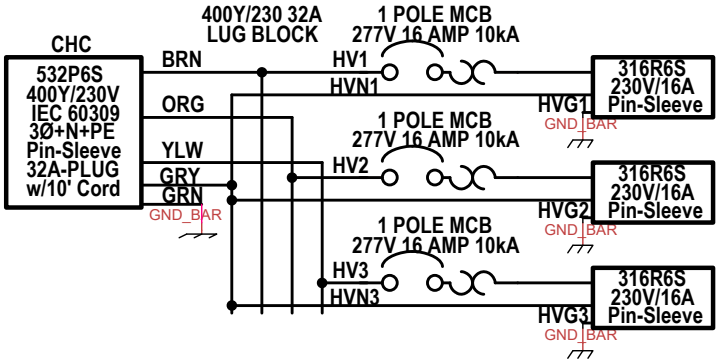

WIRE LEGEND

ID	TYPE	DESCRIPTION	WIRE SIZE
CHC	CORD	600V TYPE SOOW	#10/5 AWG cu
HV1	CABLE	600V THHN BROWN	#14 AWG cu
HV2	CABLE	600V THHN ORANGE	#14 AWG cu
HV3	CABLE	600V THHN YELLOW	#14 AWG cu
HVG1	CABLE	600V THHN GREEN	#14 AWG cu
HVG2	CABLE	600V THHN GREEN	#14 AWG cu
HVG3	CABLE	600V THHN GREEN	#14 AWG cu
HVN1	CABLE	600V THHN GRAY	#14 AWG cu
HVN2	CABLE	600V THHN GRAY	#14 AWG cu
HVN3	CABLE	600V THHN GRAY	#14 AWG cu

Title: MPD-CM2-308.32AB-YK0-Z-3.R10-3.E72S-M1		
Author: David Downs		
File: :30V 32A 3PH MLO 3x316R6S 10'C+532P6S.dsn		Document
Revision: 1.0	Date: 01/23/2024	Sheets: 1 of 1


Larson Electronics
1-800-369-6671
Sales@LarsonElectronics.com


Larson Electronics
1-800-369-6671




Larson Electronics
1-800-369-6671
Sales@LarsonElectronics.com

Certification

Manufacturer: Larson Electronics LLC
Address: 9419 US-HWY 175
Kemp, Texas 75143

Declare the following equipment conforms to the standard(s) as listed:

Model: MT-BBT Series
Description: Buck/Boost Transformers

The MT-BBT series of buck/boost transformers are comprised of a NEC (National Electrical Code, United States) and CEC (Canadian Electrical Code, Canada) Listed transformers from various manufacturers, including Amce Electric, Control Transformer Inc., Dogan Electric MFG CO., Eaglerise Electric & Electronics Co LTD, Federal Pacific, Hammond MFG Co LTD, and Jefferson Electric Inc. These transformers are manufactured to Larson Electronics LLC specifications including specified windings, winding materials, taps, mounting, and housing designs. Larson Electronics LLC MT-BBT series may include customized mounting external accessories, prewired transformers, and cord caps. This assembly is built to NEC and CEC standards.

Signed for and on behalf of: Larson Electronics, LLC
Place of issue: Kemp, TX

Signature: James Thomas

Name: James Thomas
Position: Operations Manager

LARSON ELECTRONICS LLC • 9419 E US HWY 175 • KEMP, TX 75143
p: 1-800-369-6671 • intl: 903-498-3363 • f: 903-498-3364 • sales@larsonelectronics.com

Material Safety Data Sheet

To Whom It May Concern,

Larson Electronics LLC MT Series industrial line of transformers are considered "ARTICLES" under 29 CFR 1910-1200, the OSHA Hazard Communication Standard, and do not require a Material Safety Data Sheet (MSDS).

Articles are specifically exempt from the regulations of this standard. OSHA defines an article as follows:

1910-1200(c) – Article means a manufactured item other than a fluid or particle:

i. Which is formed to a specific shape or design during manufacture;
ii. Which has end use function(s) dependent in whole or in part upon its shape or design during end use; and
iii. Which under normal conditions does not release more than very small quantities.

Regards,

Ray Smith
Larson Electronics, LLC.

LARSON ELECTRONICS LLC • 9419 E US HWY 175 • KEMP, TX 75143
p: 1-800-369-6671 • intl: 903-498-3363 • f: 903-498-3364 • sales@larsonelectronics.com

UL Product iQ™

XPTQ.E79947 - Transformers, General Purpose

Transformers, General Purpose

See General Information for Transformers, General Purpose

ACME ELECTRIC, A DIVISION OF HUBBELL INCORPORATED (DELAWARE) E79947
N56 W13385 Silver Spring Dr
Menomonee Falls, WI 53051 USA

Trademark and/or Tradename: Acme Electric®

Air cooled reactors, Model(s) Series LWE with prefixes

General purpose transformers, "Series or style SE", Model(s) 47564, 47565

General purpose transformers, "Series or style SE or SR", Model(s) TLVS, TS

General purpose transformers, indoor or protected cover use, "SE", Model(s) Series or style SE

General purpose transformers, indoor or protected cover use, Model(s) Series or style SE

General purpose transformers, indoor use only, Model(s) Series or style EB, T-60620

General purpose transformers, indoor, protected cover or outdoor use, "SR", Model(s) Series or style SR

General purpose transformers, indoor, protected cover or outdoor use, Model(s) Series or style ER, Series or style SR

Industrial control transformers, Model(s) AE, CE, FS, TA, TB

Last Updated on 2019-05-08

The appearance of a company's name or product in this database does not in itself assure that products so identified have been manufactured under UL's Follow-Up Service. Only those products bearing the UL Mark should be considered to be Certified and covered under UL's Follow-Up Service. Always look for the Mark on the product.

UL permits the reproduction of the material contained in the Online Certification Directory subject to the following conditions: 1. The Guide Information, Assemblies, Constructions, Designs, Systems, and/or Certifications (files) must be presented in their entirety and in a non-misleading manner, without any manipulation of the data (or drawings). 2. The statement "Reprinted from the Online Certifications Directory with permission from UL" must appear adjacent to the extracted material. In addition, the reprinted material must include a copyright notice in the following format: "© 2020 UL LLC"

UL Product iQ™

XPTQ.E506261 - Transformers, General Purpose

Transformers, General Purpose

See General Information for Transformers, General Purpose

CONTROL TRANSFORMER INC E506261
3701 Warren Meadville Rd
Cortland, OH 44410-9464 USA

Model(s) PWR-2637

Last Updated on 2019-03-05

The appearance of a company's name or product in this database does not in itself assure that products so identified have been manufactured under UL's Follow-Up Service. Only those products bearing the UL Mark should be considered to be Certified and covered under UL's Follow-Up Service. Always look for the Mark on the product.

UL permits the reproduction of the material contained in the Online Certification Directory subject to the following conditions: 1. The Guide Information, Assemblies, Constructions, Designs, Systems, and/or Certifications (files) must be presented in their entirety and in a non-misleading manner, without any manipulation of the data (or drawings). 2. The statement "Reprinted from the Online Certifications Directory with permission from UL" must appear adjacent to the extracted material. In addition, the reprinted material must include a copyright notice in the following format: "© 2020 UL LLC"

UL Product iQ™

XQNX.E495103 - Power and General-purpose Transformers, Dry Type

Power and General-purpose Transformers, Dry Type

See General Information for Power and General-purpose Transformers, Dry Type

CONTROL TRANSFORMER INC E495103
3701 Warren Meadville Rd
Cortland, OH 44410-9464 USA

Dry Type Ventilated Autotransformer, E12884.

Last Updated on 2017-09-14

The appearance of a company's name or product in this database does not in itself assure that products so identified have been manufactured under UL's Follow-Up Service. Only those products bearing the UL Mark should be considered to be Certified and covered under UL's Follow-Up Service. Always look for the Mark on the product.

UL permits the reproduction of the material contained in the Online Certification Directory subject to the following conditions: 1. The Guide Information, Assemblies, Constructions, Designs, Systems, and/or Certifications (files) must be presented in their entirety and in a non-misleading manner, without any manipulation of the data (or drawings). 2. The statement "Reprinted from the Online Certifications Directory with permission from UL" must appear adjacent to the extracted material. In addition, the reprinted material must include a copyright notice in the following format: "© 2020 UL LLC"

UL Product iQ™

XPTQ.E3210 - Transformers, General Purpose

Transformers, General Purpose

See General Information for Transformers, General Purpose

DONGAN ELECTRIC MFG CO E3210
34760 Garfield Rd
Fraser, MI 48026 USA

Dry type, auto transformers, Model(s) 415 Series With additional nomenclature to define specific features as allowed by UL file.

Dry type, auto transformers, Model(s) 515 Series With additional nomenclature to define specific features as allowed by UL file.

General purpose autotransformers, Model(s) 34 Series@

General purpose transformers, "Series 75", Model(s) ESA-XXXXX.XXX and R

General purpose transformers, "Series 75", Model(s) Series 75 followed by suffix numbers to indicate ratings

General purpose transformers, "Series 75", Model(s) Series CI3 followed by suffix numbers to indicate ratings

General purpose transformers, "Series 75", Model(s) Series PI3 followed by suffix numbers to indicate ratings

General purpose transformers, "Series 75", Model(s) Series WI3 followed by suffix numbers to indicate ratings

General purpose transformers, Model(s) NSC-XX-TY-Y1Y2

General purpose transformers rated 10 KVA or less, Model(s) 413 Series With additional nomenclature to define specific features as allowed by UL file.

General purpose transformers rated 10 KVA or less, Model(s) 416 Series With additional nomenclature to define specific features as allowed by UL file.

General purpose transformers rated 10 KVA or less, Model(s) 513 Series With additional nomenclature to define specific features as allowed by UL file.

General purpose transformers rated 10 KVA or less, Model(s) 516 Series With additional nomenclature to define specific features as allowed by UL file.

General purpose transformers, indoor use only, Model(s) 35 Series@, 80 and 95 Series@

Industrial control transformers, Model(s) 50-0025-XXX thru 50-5000-XXX

Industrial control transformers, Model(s) 53 , with 05, 07, 10, 15, 20, 25, 30, 35, 37, 50, 75, 100, 150, 200, 300 or 500.

Industrial control transformers, Model(s) 53A , with 05, 07, 10, 15, 20, 25, 30, 35, 37, 50, 75, 100, 150, 200, 300 or 500.

Industrial control transformers, Model(s) 54 , with 05, 07, 10, 15, 20, 25, 30, 35, 37, 50, 75, 100, 150, 200, 300 or 500.

Industrial control transformers, Model(s) 56 , with 05, 07, 10, 15, 20, 25, 30, 35, 37, 50, 75, 100, 150, 200, 300 or 500.

Industrial control transformers, Model(s) 56A , with 05, 07, 10, 15, 20, 25, 30, 35, 37, 50, 75, 100, 150, 200, 300 or 500.

Industrial control transformers, Model(s) AC or HC , followed by four digits, followed by 1, 2, 3, 4 or 6, followed by 1, 2, 3, 4, 5, 6, 7, 8 or 9, with or without SH.

Industrial control transformers, Model(s) AC-XXXX Y1Y2, BC-XXXX-Y1Y2, ES-XXXXX-XXX, IC-0010-XXX-YYYY thru IC-1000-XXX-YYYY

Industrial control transformers, Model(s) NSC , followed by 21 thru 35, followed by A, B, or H, followed by 1, 2, 4 or 6, followed by four digits.

Industrial control transformers, Model(s) Y1Y2

Insulating transformers, indoor use only, "35 Series", Model(s) 35-05

Insulating transformers, indoor use only, "35 Series", Model(s) 35-05, 35-10, 35-15, 35-20, 35-25, 35-35, 35-50 or 35-75, followed by -3, -9, -16, -18, -58, -126, -132, -250, -303, -309, -342, -419, -FB6, -KSPEC, -LM, -LY, -M, -S or -Y.

Insulating transformers, indoor use only, "35 Series", Model(s) 35-10, 35-15, 35-25, 35-50, 35-75, 35-XXXX+

Insulating transformers, indoor use only, Model(s) 1345, 1452, 2481, 33 Series@, 36-05 , followed by A, C, KA, KC, KN, KS, N, S., 36-10 , followed by A, C, KA, KC, KN, KS, N, S., 36-100 , followed by A, C, KA, KC, KN, KS, N, S., 36-100-7, 36-25 , followed by A, C, KA, KC, KN, KS, N, S., 36-25-7, 36-50 , followed by A, C, KA, KC, KN, KS, N, S., 36-50-7, 36-75 , followed by A, C, KA, KC, KN, KS, N, S., 5646-47, PCA

Isolation power transformers for indoor or outdoor use, Model(s) 161-10*, 161-7*, 163-3*, 163-6*, 163-9*, 180-100*, 180-150*, 180-200*, 180-300*, 180-50*, 180-500*, 180-75*, 35-05, 35-10, 35-15, 35-25, 35-50, 35-75, 35-XXXX+, 45-XXXX, 712XX-XXXX, 80-XXXX+, 85-XXXX, AP-XXXX, ES-XXXXX-XXX, FP-XXXX

Isolation power transformers for indoor or outdoor use, max rated 10 KVA, Model(s) 61-XXXX+, 63-XXXX+

Isolation power transformers for indoor or outdoor use, max rated 45 KVA, Model(s) 704-XXXX, 74X-XXXX, 76-XXXX

Power transformers, "45 Series", Model(s) CI1 with suffix letters and numbers., ESA-XXXXXX.XXX with suffix letters and numbers., PI1 with suffix letters and numbers., R with suffix letters and numbers., WI1 with suffix letters and numbers.

Reactors, Model(s) R Series@

Transformers rated over 10 KVA, Model(s) 411 Series With additional nomenclature to define specific features as allowed by UL file.

Transformers rated over 10 KVA, Model(s) 511 Series With additional nomenclature to define specific features as allowed by UL file.

"IC", Model(s) IC-XXXX-XXX-YYYY IC-SERIES Example: IC - XXXX - XXX - YYYY I II III IV I - IC " Industrial control transformer with class 105°C (A) Insulation II - VA Rating 50-1000 VA III - 000-999 to indicate variations in voltage ratings & taps available. IV - Encapsulated option

* - May be followed by 1 thru 999.

+ - With X's replaced by numerals and/or LM, LY, M or Y.

@ - May be followed by suffix numbers or letters to indicate ratings and voltage combinations.

X - Where X is 0-9.

Y - Where Y is any alphanumeric characters.

Last Updated on 2020-08-31

The appearance of a company's name or product in this database does not in itself assure that products so identified have been manufactured under UL's Follow-Up Service. Only those products bearing the UL Mark should be considered to be Certified and covered under UL's Follow-Up Service. Always look for the Mark on the product.

UL permits the reproduction of the material contained in the Online Certification Directory subject to the following conditions: 1. The Guide Information, Assemblies, Constructions, Designs, Systems, and/or Certifications (files) must be presented in their entirety and in a non-misleading manner, without any manipulation of the data (or drawings). 2. The statement "Reprinted from the Online Certifications Directory with permission from UL" must appear adjacent to the extracted material. In addition, the reprinted material must include a copyright notice in the following format: "© 2020 UL LLC"

UL Product iQ™

XQNX.E78234 - Power and General-purpose Transformers, Dry Type

Power and General-purpose Transformers, Dry Type

See General Information for Power and General-purpose Transformers, Dry Type

DONGAN ELECTRIC MFG CO E78234
34760 Garfield Rd
Fraser, MI 48026 USA

Transformers, Reactors Series 41, 42, 43, 44, 61, 63, 64, 71, 72, 73, 74, 81, 83, 84, ES, ESA, R, SD.

Transformers, rated 15 kva through 1000 kva, Cat. Nos. 421 Series (a), 423 Series (a), 424 Series (a), 431 Series (a), 433 Series (a), 434 Series (a), 521 Series (a), 523 Series (a), 524 Series (a), 531 Series (a), 533 Series (a), 534 Series (a), 425 Series (a), 435 Series (a), 525 Series (a), 535 Series (a)

(a) - With additional nomenclature to define specific features as allowed by UL file

Last Updated on 2018-02-23

The appearance of a company's name or product in this database does not in itself assure that products so identified have been manufactured under UL's Follow-Up Service. Only those products bearing the UL Mark should be considered to be Certified and covered under UL's Follow-Up Service. Always look for the Mark on the product.

UL permits the reproduction of the material contained in the Online Certification Directory subject to the following conditions: 1. The Guide Information, Assemblies, Constructions, Designs, Systems, and/or Certifications (files) must be presented in their entirety and in a non-misleading manner, without any manipulation of the data (or drawings). 2. The statement "Reprinted from the Online Certifications Directory with permission from UL" must appear adjacent to the extracted material. In addition, the reprinted material must include a copyright notice in the following format: "© 2020 UL LLC"

UL Product iQ™

XQNX.E478366 - Power and General-purpose Transformers, Dry Type

Power and General-purpose Transformers, Dry Type

See General Information for Power and General-purpose Transformers, Dry Type

EAGLERISE ELECTRIC & ELECTRONIC (CHINA) CO LTD E478366
A3 GUICHENG SCIENCE & TECHNOLOGY PARK
JIANPING RD
NANHAI DISTRICT
FOSHAN, GUANGDONG 528200 CHINA

Transformer, Model HEPXXXabYYttte, where P can be 1 or 3, XXX can be 015, 025, 030, 045, 075, 100, 112, 150, 167, 225, 300, 500 or 750, a and b can be A to H, J to N, P to U or X, YY can be CU or blank, ttt can be 115 or blank, e shall be blank.

Last Updated on 2019-02-12

The appearance of a company's name or product in this database does not in itself assure that products so identified have been manufactured under UL's Follow-Up Service. Only those products bearing the UL Mark should be considered to be Certified and covered under UL's Follow-Up Service. Always look for the Mark on the product.

UL permits the reproduction of the material contained in the Online Certification Directory subject to the following conditions: 1. The Guide Information, Assemblies, Constructions, Designs, Systems, and/or Certifications (files) must be presented in their entirety and in a non-misleading manner, without any manipulation of the data (or drawings). 2. The statement "Reprinted from the Online Certifications Directory with permission from UL" must appear adjacent to the extracted material. In addition, the reprinted material must include a copyright notice in the following format: "© 2020 UL LLC"

UL Product iQ™

XPTQ.E121540 - Transformers, General Purpose

Transformers, General Purpose

See General Information for Transformers, General Purpose

FEDERAL PACIFIC TRANSFORMER CO E121540
601 OLD AIRPORT RD
BRISTOL, VA 24203-8200 USA

Enclosed: indoor or protected cover use, Model(s) SE

Industrial control transformers, Model(s) S09X.500FC-A1

Transformers, indoor or outdoor, Model(s) FB, may include FH in the type number

Last Updated on 2017-07-21

The appearance of a company's name or product in this database does not in itself assure that products so identified have been manufactured under UL's Follow-Up Service. Only those products bearing the UL Mark should be considered to be Certified and covered under UL's Follow-Up Service. Always look for the Mark on the product.

UL permits the reproduction of the material contained in the Online Certification Directory subject to the following conditions: 1. The Guide Information, Assemblies, Constructions, Designs, Systems, and/or Certifications (files) must be presented in their entirety and in a non-misleading manner, without any manipulation of the data (or drawings). 2. The statement "Reprinted from the Online Certifications Directory with permission from UL" must appear adjacent to the extracted material. In addition, the reprinted material must include a copyright notice in the following format: "© 2020 UL LLC"

UL Product iQ™

XQNX.E37783 - Power and General-purpose Transformers, Dry Type

Power and General-purpose Transformers, Dry Type

See General Information for Power and General-purpose Transformers, Dry Type

FEDERAL PACIFIC TRANSFORMER CO E37783
601 OLD AIRPORT RD
BRISTOL, VA 24203-8200 USA

Trademark and/or Tradename: "E37783"

Insulating transformers, dry type, indoor/weatherproof. Type FH, 600 v, ac max; single/three phase, Models 16B, 36B, 36D, 36F; three phase, Models 36C , 36E.

Serial Nos. 51854, 51536, 53997.

Power Transformers, rated over 10 Kva, dry type, potted indoor and weatherproof enclosures. Single phase, Type FB.

Three phase, Type FB.

Transformer, dry type, indoor/outdoor. Model 36K, rated 9 to 1000 Kva.

Serial No. 51679.

Transformer, dry type, indoor. Cat. No. B, F or H followed by 1 or 3, followed by four numbers (up to 1000), followed by 1, 2, 3, 4 or 9, followed by 1, 2, 3, 4 or 8, followed by 00, 04, 22, 24, 55 or 99.

Transformer, dry-type, enclosed. Type TENV, rated 15-225 Kva.

Kits. for modifying indoor only transformers to outdoor use.

Cat. Nos. 60100 thru 60105, 60110 thru 60116.

Last Updated on 2004-04-03

The appearance of a company's name or product in this database does not in itself assure that products so identified have been manufactured under UL's Follow-Up Service. Only those products bearing the UL Mark should be considered to be Certified and covered under UL's Follow-Up Service. Always look for the Mark on the product.

UL permits the reproduction of the material contained in the Online Certification Directory subject to the following conditions: 1. The Guide Information, Assemblies, Constructions, Designs, Systems, and/or Certifications (files) must be presented in their entirety and in a non-misleading manner, without any manipulation of the data (or drawings). 2. The statement "Reprinted from the Online Certifications Directory with permission from UL" must appear adjacent to the extracted material. In addition, the reprinted material must include a copyright notice in the following format: "© 2020 UL LLC"

UL Product iQ™

XPTQ.E207860 - Transformers, General Purpose

Transformers, General Purpose

See General Information for Transformers, General Purpose

HAMMOND MFG CO LTD E207860
52 RANKIN PL
WATERLOO, ON N2J 3Z5 CANADA

Transformers, Model(s) 3AH, HT, MH, MT, PH, PT

Transformers, fuse kits, Model(s) PFK

Last Updated on 2013-09-16

The appearance of a company's name or product in this database does not in itself assure that products so identified have been manufactured under UL's Follow-Up Service. Only those products bearing the UL Mark should be considered to be Certified and covered under UL's Follow-Up Service. Always look for the Mark on the product.

UL permits the reproduction of the material contained in the Online Certification Directory subject to the following conditions: 1. The Guide Information, Assemblies, Constructions, Designs, Systems, and/or Certifications (files) must be presented in their entirety and in a non-misleading manner, without any manipulation of the data (or drawings). 2. The statement "Reprinted from the Online Certifications Directory with permission from UL" must appear adjacent to the extracted material. In addition, the reprinted material must include a copyright notice in the following format: "© 2020 UL LLC"

UL Product iQ™

XQNX.E112313 - Power and General-purpose Transformers, Dry Type

Power and General-purpose Transformers, Dry Type

See General Information for Power and General-purpose Transformers, Dry Type

HAMMOND POWER SOLUTIONS INC E112313
595 Southgate Dr
Guelph, ON N1G 3W6 CANADA

Power transformers, dry type, indoor and outdoor; 10 kva thru 250 kva, single phase, rated 120v, ac thru 600v, ac primary and secondary.

Power transformers, dry type, indoor and outdoor; 9 kva thru 1000 kva, 3 phase, rated 120v, ac, thru 600v, ac primary and secondary.

Transformers, Types F, FN, K, KN.

Last Updated on 2002-07-08

The appearance of a company's name or product in this database does not in itself assure that products so identified have been manufactured under UL's Follow-Up Service. Only those products bearing the UL Mark should be considered to be Certified and covered under UL's Follow-Up Service. Always look for the Mark on the product.

UL permits the reproduction of the material contained in the Online Certification Directory subject to the following conditions: 1. The Guide Information, Assemblies, Constructions, Designs, Systems, and/or Certifications (files) must be presented in their entirety and in a non-misleading manner, without any manipulation of the data (or drawings). 2. The statement "Reprinted from the Online Certifications Directory with permission from UL" must appear adjacent to the extracted material. In addition, the reprinted material must include a copyright notice in the following format: "© 2020 UL LLC"

UL Product iQ™

XPTQ.E50394 - Transformers, General Purpose

Transformers, General Purpose

See General Information for Transformers, General Purpose

HAMMOND POWER SOLUTIONS INC E50394
595 Southgate Dr
Guelph, ON N1G 3W6 CANADA

Transformers, Model(s) 3AH, 52, 88-250, E, HT, HT, MH, MT, NE-0306-21, NE-0306-22, NE-0306-23, NE-0306-24, NE-0306-25, NE-0306-26, NE-0307-21, NE-0307-22, NE-0307-23, NE-0307-24, NE-0307-25, NE-0307-26, NE-2624-21, NE-2624-22, NE-2624-23, NE-2624-24, NE-2624-25, NE-2624-26, NE-2635-21, NE-2635-22, NE-2635-23, NE-2635-24, NE-2635-25, NE-2635-26, PH, PT

Transformers, single phase, Model(s) Q

Transformers, three phase, Model(s) QT

Last Updated on 2017-09-12

The appearance of a company's name or product in this database does not in itself assure that products so identified have been manufactured under UL's Follow-Up Service. Only those products bearing the UL Mark should be considered to be Certified and covered under UL's Follow-Up Service. Always look for the Mark on the product.

UL permits the reproduction of the material contained in the Online Certification Directory subject to the following conditions: 1. The Guide Information, Assemblies, Constructions, Designs, Systems, and/or Certifications (files) must be presented in their entirety and in a non-misleading manner, without any manipulation of the data (or drawings). 2. The statement "Reprinted from the Online Certifications Directory with permission from UL" must appear adjacent to the extracted material. In addition, the reprinted material must include a copyright notice in the following format: "© 2020 UL LLC"

UL Product iQ™

XPTQ.E4466 - Transformers, General Purpose

Transformers, General Purpose

See General Information for Transformers, General Purpose

JEFFERSON ELECTRIC INC E4466
9650 S FRANKLIN DR
FRANKLIN, WI 53132-8847 USA

Dry type, auto transformers, Model(s) 415 followed by a four (4) place number/letter, followed by a three (3) place number/letter.

Dry type, auto transformers, Model(s) 515 followed by a four (4) place number/letter, followed by a three (3) place number/letter.

General purpose isolation drive transformers rated 7.5 KVA or less, Model(s) 213 , , followed by 0018, 0019 or 0020, followed by 0, 3, 7 or 8, folowed by 0 or 5, followed by 1, 2, 3, 4, 5, 6 or 9.

General purpose isolation drive transformers rated 7.5 KVA or less, Model(s) 313 , , followed by 0018, 0019 or 0020, followed by 0, 3, 7 or 8, folowed by 0 or 5, followed by 1, 2, 3, 4, 5, 6 or 9.

General purpose transformers rated 10 KVA or less, Model(s) 211 , followed by 000 thru 015, followed by 1, 4, 6, 7 or 8, followed by 000, 001, 002, 055, 080, 085, 100, 120, 208, 255, 277, 300, 355, 600 thru 999, 800, 855, 880 or 885.

General purpose transformers rated 10 KVA or less, Model(s) 211-001-487, 211-001-488, 211-001-573

General purpose transformers rated 10 KVA or less, Model(s) 213, , followed by -10, -12 or -14, followed by 2, 4, 7, 8 or 9, followed by 000, 001, 002, 055, 080, 085, 120, 125, 600 thru 999, 800, 855, 880 or 885.

General purpose transformers rated 10 KVA or less, Model(s) 216 , followed by 11, 12, 14, 15 or 16, followed by 00, 01, 11, 21, 31, 41, 51, 61, 71, 81 or 91, followed by 000, 055 or 600 thru 999.

General purpose transformers rated 10 KVA or less, Model(s) 311 , followed by 000 thru 015, followed by 1, 4, 6, 7 or 8, followed by 000, 001, 002, 055, 080, 085, 100, 120, 208, 255, 277, 300, 355, 600 thru 999, 800, 855, 880 or 885.

General purpose transformers rated 10 KVA or less, Model(s) 313, , followed by -10, -12 or -14, followed by 2, 4, 7, 8 or 9, followed by 000, 001, 002, 055, 080, 085, 120, 125, 600 thru 999, 800, 855, 880 or 885.

General purpose transformers rated 10 KVA or less, Model(s) 413 followed by a four (4) place number/letter, followed by a three (3) place number/letter.

General purpose transformers rated 10 KVA or less, Model(s) 416 followed by a four (4) place number/letter, followed by a three (3) place number/letter.

General purpose transformers rated 10 KVA or less, Model(s) 513 followed by a four (4) place number/letter, followed by a three (3) place number/letter.

General purpose transformers rated 10 KVA or less, Model(s) 516 followed by a four (4) place number/letter, followed by a three (3) place number/letter.

Industrial control transformer, 50 VA thru 5000 VA rating, Model(s) 631 Series , followed by 11 through 26, followed by 00 through 14, or 99, followed by 000, 001, 10x, 20x, 30x, or 70x

Industrial control transformers, Model(s) Series 631-A[@], Series 631-B[@], Series 631-C[@]

Industrial control type, Model(s) 636-001-1111, 636-001-1121, 636-001-1131, 636-001-1141, 636-001-1142-600, 636-001-1151, 636-001-1161, 636-001-1171, 636-001-1181, 636-001-1191, 636-001-1201, 636-001-1211, 636-001-2411, 636-001-2421, 636-001-2431, 636-001-2441, 636-001-2451, 636-001-2461, 636-001-2471, 636-001-2481, 636-001-2491, 636-001-2501, 636-001-2511, 636-001-2521, 636-001-264, 637-003-495, 637-003-778, 637-1003-399, 637-1003-400, 637-1003-401, 637-1003-520, 637-1003-521, 637-1003-522, 637-201 (f), 637-206 (f), 637-208 (f), 637-209 (f), 637-211 (f), 637-216 (f), 637-218 (f), 637-219 (f),

637-221 (f), 637-221-028, 637-226 (f), 637-228 (f), 637-229 (f), 637-231 (f), 637-231-011, 637-236 (f), 637-238 (f), 637-239 (f), 637-261 (f), 637-26600, 637-268 (f), 637-269 (f), 637-271 (f), 637-276 (f), 637-278 (f), 637-279 (f), 637-281 (f), 637-286 (f), 637-288 (f), 637-289 (f), 637-291 (f), 637-296 (f), 637-298 (f), 637-299 (f), 637-361 (f), 637-366 (f), 637-369 (f), 637-371 (f), 637-376 (f), 637-379 (f), 637-381 (f), 637-386 (f), 637-389 (f), 637-391 (f), 637-396 (f), 637-399 (f), 637-401 (f), 637-406 (f), 637-409 (f), 637-411 (f), 637-421 (f), 637-431 (f), 637-441 (f), 637-451 (f), 637-461 (f), 637-466 (f), 637-469 (f), 637-471 (f), 637-476 (f), 637-479 (f), 637-481 (f) (h), 637-486 (f), 637-489 (f), 637-491 (f), 637-496 (f), 637-499 (f), 637-531 (f), 637-536 (f), 637-539 (f), 637-551 (f), 637-556 (f), 637-559 (f), 637-561 (f), 637-566 (f), 637-569 (f), 637-571 (f), 637-576 (f), 637-579 (f), 637-581 (f), 637-586 (f), 637-589 (f), 637-591 (f), 637-596 (f), 637-599 (f), 637-601 (f), 637-606 (f), 637-608 (f), 637-609 (f), 637-611 (f), 637-616 (f), 637-618 (f), 637-619 (f), 637-621 (f), 637-626 (f), 637-628 (f), 637-629 (f), 637-631 (f), 637-636 (f), 637-638 (f), 637-639 (f), 637-701 (f), 637-706 (f), 637-708 (f), 637-709 (f), 637-711 (f), 637-716 (f), 637-718 (f), 637-719 (f), 637-721 (f), 637-726 (f), 637-729 (f), 637-731 (f), 637-736 (f), 637-738 (f), 637-739 (f), 637-741 (f), 637-746 (f), 637-748 (f), 637-749 (f), 637-807 (f)

Transformers designed to supply current to circuits or devices requiring limited amounts of power, Model(s) 231-101 , with or without suffix -030 or -035., 231-111 , with or without suffix -030 or -035., 31-141 , with or without suffix -030 or -035.

Transformers rated over 10 KVA, Model(s) 211 , followed by 16 or 18, followed by 1, 4, 6, 7 or 8, followed by 000, 055, 080, 085, 100, 120, 208, 255, 277, 300, 355, 600 thru 999.

Transformers rated over 10 KVA, Model(s) 213 , followed by 16, followed by 2, 4, 7, 8 or 9, followed by 000, 055, 080, 085, 120, 125, 600 thru 999.

Transformers rated over 10 KVA, Model(s) 411 followed by a four (4) place number/letter, followed by a three (3) place number/letter.

Transformers rated over 10 KVA, Model(s) 511 followed by a four (4) place number/letter, followed by a three (3) place number/letter.

[@] - followed by a four (4) place number/letter, followed by a three (3) place number/letter. Each unit

Last Updated on 2019-10-25

The appearance of a company's name or product in this database does not in itself assure that products so identified have been manufactured under UL's Follow-Up Service. Only those products bearing the UL Mark should be considered to be Certified and covered under UL's Follow-Up Service. Always look for the Mark on the product.

UL permits the reproduction of the material contained in the Online Certification Directory subject to the following conditions: 1. The Guide Information, Assemblies, Constructions, Designs, Systems, and/or Certifications (files) must be presented in their entirety and in a non-misleading manner, without any manipulation of the data (or drawings). 2. The statement "Reprinted from the Online Certifications Directory with permission from UL" must appear adjacent to the extracted material. In addition, the reprinted material must include a copyright notice in the following format: "© 2020 UL LLC"

UL Product iQ™

XQNX.E78376 - Power and General-purpose Transformers, Dry Type

Power and General-purpose Transformers, Dry Type

See General Information for Power and General-purpose Transformers, Dry Type

JEFFERSON ELECTRIC INC E78376
9650 S FRANKLIN DR
FRANKLIN, WI 53132-8847 USA

Transformers rated over 10 kva, Cat. Nos. 221, 223, followed by suffixes.

Transformers rated over 10 kva, for nonsinusoided load use, Cat. No. 217, followed by 318, 320, 322, 323, 324 or 327, followed by 5 or 7, followed by 0, 1, 7 or 8, followed by 0, 5 or 8, followed by 0 through 7; Cat. No. 224, followed by 316, 319 through 323, 325, 326, 329, 331 or 334, followed by 1 through 5 or 9, followed by 0, 1, 7 or 8, followed by 0, 5 or 8, followed by 0 through 7.

Transformers rated 15 kva through 1000 kva, Cat. Nos. 423-, 424, 431, 433, 434, 523, 524, 531, 533 and 534 followed by a 4 digit number/letter, followed by a 3 digit number/letter, rated 25 kva through 667 kva; Cat. Nos. 421, 521 followed by a 3 digit number followed by 0 one digit number, followed by a 3 digit number. Cat. Nos. 425, 435, 525 and 535 followed by a four (4) place number/letter, followed by a three (3) place number/letter.

Last Updated on 2010-08-05

The appearance of a company's name or product in this database does not in itself assure that products so identified have been manufactured under UL's Follow-Up Service. Only those products bearing the UL Mark should be considered to be Certified and covered under UL's Follow-Up Service. Always look for the Mark on the product.

UL permits the reproduction of the material contained in the Online Certification Directory subject to the following conditions: 1. The Guide Information, Assemblies, Constructions, Designs, Systems, and/or Certifications (files) must be presented in their entirety and in a non-misleading manner, without any manipulation of the data (or drawings). 2. The statement "Reprinted from the Online Certifications Directory with permission from UL" must appear adjacent to the extracted material. In addition, the reprinted material must include a copyright notice in the following format: "© 2020 UL LLC"

UL Product iQ™

XPTQ7.E79947 - Transformers, General Purpose Certified for Canada

Transformers, General Purpose Certified for Canada

See General Information for Transformers, General Purpose Certified for Canada

ACME ELECTRIC, A DIVISION OF HUBBELL INCORPORATED (DELAWARE) E79947
N56 W13385 Silver Spring Dr
Menomonee Falls, WI 53051 USA
Air cooled reactors, Model(s) Series LWE with prefixes

General purpose transformers, indoor or protected cover use, "SE", Model(s) Series or style SE

General purpose transformers, indoor use only, Model(s) Series or style EB

General purpose transformers, indoor, protected cover or outdoor use, "SR", Model(s) Series or style SR

Industrial control transformers, Model(s) AE, CE, FS, TA, TB

Trademark and/or Tradename: Acme Electric®

Last Updated on 2019-05-08

The appearance of a company's name or product in this database does not in itself assure that products so identified have been manufactured under UL's Follow-Up Service. Only those products bearing the UL Mark should be considered to be Certified and covered under UL's Follow-Up Service. Always look for the Mark on the product.

UL permits the reproduction of the material contained in the Online Certification Directory subject to the following conditions: 1. The Guide Information, Assemblies, Constructions, Designs, Systems, and/or Certifications (files) must be presented in their entirety and in a non-misleading manner, without any manipulation of the data (or drawings). 2. The statement "Reprinted from the Online Certifications Directory with permission from UL" must appear adjacent to the extracted material. In addition, the reprinted material must include a copyright notice in the following format: "© 2020 UL LLC"

UL Product iQ™

XPTQ7.E506261 - Transformers, General Purpose Certified for Canada

Transformers, General Purpose Certified for Canada

See General Information for Transformers, General Purpose Certified for Canada

CONTROL TRANSFORMER INC E506261
3701 Warren Meadville Rd
Cortland, OH 44410-9464 USA
Model(s) PWR-2637

Last Updated on 2019-03-05

The appearance of a company's name or product in this database does not in itself assure that products so identified have been manufactured under UL's Follow-Up Service. Only those products bearing the UL Mark should be considered to be Certified and covered under UL's Follow-Up Service. Always look for the Mark on the product.

UL permits the reproduction of the material contained in the Online Certification Directory subject to the following conditions: 1. The Guide Information, Assemblies, Constructions, Designs, Systems, and/or Certifications (files) must be presented in their entirety and in a non-misleading manner, without any manipulation of the data (or drawings). 2. The statement "Reprinted from the Online Certifications Directory with permission from UL" must appear adjacent to the extracted material. In addition, the reprinted material must include a copyright notice in the following format: "© 2020 UL LLC"

UL Product iQ™

XQNX7.E495103 - Power and General-purpose Transformers, Dry Type Certified for Canada

Power and General-purpose Transformers, Dry Type Certified for Canada

See General Information for Power and General-purpose Transformers, Dry Type Certified for Canada

CONTROL TRANSFORMER INC E495103
3701 Warren Meadville Rd
Cortland, OH 44410-9464 USA
Dry Type Ventilated Autotransformer, E12884.

Last Updated on 2017-09-14

The appearance of a company's name or product in this database does not in itself assure that products so identified have been manufactured under UL's Follow-Up Service. Only those products bearing the UL Mark should be considered to be Certified and covered under UL's Follow-Up Service. Always look for the Mark on the product.

UL permits the reproduction of the material contained in the Online Certification Directory subject to the following conditions: 1. The Guide Information, Assemblies, Constructions, Designs, Systems, and/or Certifications (files) must be presented in their entirety and in a non-misleading manner, without any manipulation of the data (or drawings). 2. The statement "Reprinted from the Online Certifications Directory with permission from UL" must appear adjacent to the extracted material. In addition, the reprinted material must include a copyright notice in the following format: "© 2020 UL LLC"

UL Product iQ™

XPTQ7.E3210 - Transformers, General Purpose Certified for Canada

Transformers, General Purpose Certified for Canada

See General Information for Transformers, General Purpose Certified for Canada

DONGAN ELECTRIC MFG CO E3210
34760 Garfield Rd
Fraser, MI 48026 USA

Dry type, auto transformers, Model(s) 415 Series With additional nomenclature to define specific features as allowed by UL file.

Dry type, auto transformers, Model(s) 515 Series With additional nomenclature to define specific features as allowed by UL file.

General purpose autotransformers, Model(s) 34 Series@

General purpose transformers, "Series 75", Model(s) ESA-XXXXX.XXX and R

General purpose transformers, "Series 75", Model(s) Series 75 followed by suffix numbers to indicate ratings

General purpose transformers, "Series 75", Model(s) Series CI3 followed by suffix numbers to indicate ratings

General purpose transformers, "Series 75", Model(s) Series PI3 followed by suffix numbers to indicate ratings

General purpose transformers, "Series 75", Model(s) Series WI3 followed by suffix numbers to indicate ratings

General purpose transformers, Model(s) NSC-XX-TY-Y1Y2

General purpose transformers rated 10 KVA or less, Model(s) 413 Series With additional nomenclature to define specific features as allowed by UL file.

General purpose transformers rated 10 KVA or less, Model(s) 416 Series With additional nomenclature to define specific features as allowed by UL file.

General purpose transformers rated 10 KVA or less, Model(s) 513 Series With additional nomenclature to define specific features as allowed by UL file.

General purpose transformers rated 10 KVA or less, Model(s) 516 Series With additional nomenclature to define specific features as allowed by UL file.

General purpose transformers, indoor use only, Model(s) 35 Series@, 80 and 95 Series@

Industrial control transformers, Model(s) 50-0025-XXX thru 50-5000-XXX

Industrial control transformers, Model(s) AC or HC , followed by four digits, followed by 1, 2, 3, 4 or 6, followed by 1, 2, 3, 4, 5, 6, 7, 8 or 9, with or without SH.

Industrial control transformers, Model(s) AC-XXXX Y1Y2, BC-XXXX-Y1Y2, ES-XXXXX-XXX, IC-0010-XXX-YYYY thru IC-1000-XXX-YYYY

Industrial control transformers, Model(s) NSC , followed by 21 thru 35, followed by A, B, or H, followed by 1, 2, 4 or 6, followed by four digits.

Industrial control transformers, Model(s) Y1Y2

Insulating transformers, indoor use only, "35 Series", Model(s) 35-05

Insulating transformers, indoor use only, "35 Series", Model(s) 35-05, 35-10, 35-15, 35-20, 35-25, 35-35, 35-50 or 35-75, followed by -3, -9, -16, -18, -58, -126, -132, -250, -303, -309, -342, -419, -FB6, -KSPEC, -LM, -LY, -M, -S or -Y.

Insulating transformers, indoor use only, "35 Series", Model(s) 35-10, 35-15, 35-25, 35-50, 35-75, 35-XXXX+

Insulating transformers, indoor use only, Model(s) 33 Series@, 36-05 , followed by A, C, KA, KC, KN, KS, N, S., 36-10 , followed by A,

C, KA, KC, KN, KS, N, S., 36-100 , followed by A, C, KA, KC, KN, KS, N, S., 36-25 , followed by A, C, KA, KC, KN, KS, N, S., 36-50 , followed by A, C, KA, KC, KN, KS, N, S., 36-75 , followed by A, C, KA, KC, KN, KS, N, S.

Isolation power transformers for indoor or outdoor use, Model(s) 35-05, 35-10, 35-15, 35-25, 35-50, 35-75, 35-XXXX+, 45-XXXX, 712XX-XXXX, 85-XXXX, AP-XXXX, ES-XXXXX-XXX, FP-XXXX

Isolation power transformers for indoor or outdoor use, max rated 45 KVA, Model(s) 704-XXXX, 74X-XXXX, 76-XXXX

Power transformers, "45 Series", Model(s) CI1 with suffix letters and numbers., ESA-XXXXXX.XXX with suffix letters and numbers., PI1 with suffix letters and numbers., R with suffix letters and numbers., WI1 with suffix letters and numbers.

Reactors, Model(s) R Series@

Transformers rated over 10 KVA, Model(s) 411 Series With additional nomenclature to define specific features as allowed by UL file.

Transformers rated over 10 KVA, Model(s) 511 Series With additional nomenclature to define specific features as allowed by UL file.

"IC", Model(s) IC-XXXX-XXX-YYYY IC-SERIES Example: IC - XXXX - XXX - YYYY I II III IV I - IC " Industrial control transformer with class 105°C (A) Insulation II - VA Rating 50-1000 VA III - 000-999 to indicate variations in voltage ratings & taps available. IV - Encapsulated option

+ - With X's replaced by numerals and/or LM, LY, M or Y.

@ - May be followed by suffix numbers or letters to indicate ratings and voltage combinations.

X - Where X is 0-9.

Y - Where Y is any alphanumeric characters.

Last Updated on 2020-08-31

The appearance of a company's name or product in this database does not in itself assure that products so identified have been manufactured under UL's Follow-Up Service. Only those products bearing the UL Mark should be considered to be Certified and covered under UL's Follow-Up Service. Always look for the Mark on the product.

UL permits the reproduction of the material contained in the Online Certification Directory subject to the following conditions: 1. The Guide Information, Assemblies, Constructions, Designs, Systems, and/or Certifications (files) must be presented in their entirety and in a non-misleading manner, without any manipulation of the data (or drawings). 2. The statement "Reprinted from the Online Certifications Directory with permission from UL" must appear adjacent to the extracted material. In addition, the reprinted material must include a copyright notice in the following format: "© 2020 UL LLC"

UL Product iQ™

XQNX7.E78234 - Power and General-purpose Transformers, Dry Type Certified for Canada

Power and General-purpose Transformers, Dry Type Certified for Canada

See General Information for Power and General-purpose Transformers, Dry Type Certified for Canada

DONGAN ELECTRIC MFG CO E78234
34760 Garfield Rd
Fraser, MI 48026 USA
Transformers, Reactors Series 41, 42, 61, 81, 43, 44, 63, 64, 71, 72, 73, 74, 83, 84, ES, ESA, SD and R.

Dry type enclosed power transformers, 421 Series (a), 423 Series (a), 424 Series (a), 431 Series (a), 433 Series (a), 434 Series (a), 521 Series (a), 523 Series (a), 524 Series (a), 531 Series (a), 533 Series (a), 534 Series (a), 425 Series (a), 435 Series (a), 525 Series (a), 535 Series (a).

(a) - With additional nomenclature to define specific features as allowed by UL file

Last Updated on 2018-02-23

The appearance of a company's name or product in this database does not in itself assure that products so identified have been manufactured under UL's Follow-Up Service. Only those products bearing the UL Mark should be considered to be Certified and covered under UL's Follow-Up Service. Always look for the Mark on the product.

UL permits the reproduction of the material contained in the Online Certification Directory subject to the following conditions: 1. The Guide Information, Assemblies, Constructions, Designs, Systems, and/or Certifications (files) must be presented in their entirety and in a non-misleading manner, without any manipulation of the data (or drawings). 2. The statement "Reprinted from the Online Certifications Directory with permission from UL" must appear adjacent to the extracted material. In addition, the reprinted material must include a copyright notice in the following format: "© 2020 UL LLC"

UL Product iQ™

XQNX7.E478366 - Power and General-purpose Transformers, Dry Type Certified for Canada

Power and General-purpose Transformers, Dry Type Certified for Canada

See General Information for Power and General-purpose Transformers, Dry Type Certified for Canada

EAGLERISE ELECTRIC & ELECTRONIC (CHINA) CO LTD E478366
A3 GUICHENG SCIENCE & TECHNOLOGY PARK
JIANPING RD
NANHAI DISTRICT
FOSHAN, GUANGDONG 528200 CHINA

Transformer, Model HEPXXXabYYttte, where P can be 1 or 3, XXX can be 015, 025, 030, 045, 075, 100, 112, 150, 167, 225, 300, 500 or 750, a and b can be A to H, J to N, P to U or X, YY can be CU or blank, ttt can be 115 or blank, e shall be blank.

Last Updated on 2019-02-12

The appearance of a company's name or product in this database does not in itself assure that products so identified have been manufactured under UL's Follow-Up Service. Only those products bearing the UL Mark should be considered to be Certified and covered under UL's Follow-Up Service. Always look for the Mark on the product.

UL permits the reproduction of the material contained in the Online Certification Directory subject to the following conditions: 1. The Guide Information, Assemblies, Constructions, Designs, Systems, and/or Certifications (files) must be presented in their entirety and in a non-misleading manner, without any manipulation of the data (or drawings). 2. The statement "Reprinted from the Online Certifications Directory with permission from UL" must appear adjacent to the extracted material. In addition, the reprinted material must include a copyright notice in the following format: "© 2020 UL LLC"

UL Product iQ™

XPTQ7.E121540 - Transformers, General Purpose Certified for Canada

Transformers, General Purpose Certified for Canada

See General Information for Transformers, General Purpose Certified for Canada

FEDERAL PACIFIC TRANSFORMER CO E121540
601 OLD AIRPORT RD
BRISTOL, VA 24203-8200 USA
Industrial control transformers, Model(s) S09X.500FC-A1

Transformers, indoor or outdoor, Model(s) FB, may include FH in the type number

Last Updated on 2017-07-21

The appearance of a company's name or product in this database does not in itself assure that products so identified have been manufactured under UL's Follow-Up Service. Only those products bearing the UL Mark should be considered to be Certified and covered under UL's Follow-Up Service. Always look for the Mark on the product.

UL permits the reproduction of the material contained in the Online Certification Directory subject to the following conditions: 1. The Guide Information, Assemblies, Constructions, Designs, Systems, and/or Certifications (files) must be presented in their entirety and in a non-misleading manner, without any manipulation of the data (or drawings). 2. The statement "Reprinted from the Online Certifications Directory with permission from UL" must appear adjacent to the extracted material. In addition, the reprinted material must include a copyright notice in the following format: "© 2020 UL LLC"

UL Product iQ™

XQNX7.E37783 - Power and General-purpose Transformers, Dry Type Certified for Canada

Power and General-purpose Transformers, Dry Type Certified for Canada

See General Information for Power and General-purpose Transformers, Dry Type Certified for Canada

FEDERAL PACIFIC TRANSFORMER CO E37783
601 OLD AIRPORT RD
BRISTOL, VA 24203-8200 USA

Insulating transformers, dry type, indoor/weatherproof. Type FH, 600 v, ac max; single/three phase, Models 16B, 36B, 36D, 36F; three phase, Models 36C, 36E.

Serial Nos. 51854, 51536, 53997.

Power transformers, rated over 10 Kva, dry type, potted, indoor and weatherproof enclosures.

Three phase, Type FB.

Transformer, dry type, indoor/outdoor. Model 36K, rated 9 to 1000 Kva.

Serial No. 51679.

Transformer, dry-type, enclosed. Type TENV, rated 15-225 Kva.

Kits. for modifying indoor only transformers to outdoor use.

Cat. Nos. 60100 thru 60105, 60110 thru 60116.

Trademark and/or Tradename: "E37783"

Last Updated on 2004-04-03

The appearance of a company's name or product in this database does not in itself assure that products so identified have been manufactured under UL's Follow-Up Service. Only those products bearing the UL Mark should be considered to be Certified and covered under UL's Follow-Up Service. Always look for the Mark on the product.

UL permits the reproduction of the material contained in the Online Certification Directory subject to the following conditions: 1. The Guide Information, Assemblies, Constructions, Designs, Systems, and/or Certifications (files) must be presented in their entirety and in a non-misleading manner, without any manipulation of the data (or drawings). 2. The statement "Reprinted from the Online Certifications Directory with permission from UL" must appear adjacent to the extracted material. In addition, the reprinted material must include a copyright notice in the following format: "© 2020 UL LLC"

UL Product iQ™

XPTQ7.E50394 - Transformers, General Purpose Certified for Canada

Transformers, General Purpose Certified for Canada

See General Information for Transformers, General Purpose Certified for Canada

HAMMOND POWER SOLUTIONS INC E50394
595 Southgate Dr
Guelph, ON N1G 3W6 CANADA
Transformers, Model(s) 3AH, HT, HT, MH, MT, PH, PT

Last Updated on 2017-09-12

The appearance of a company's name or product in this database does not in itself assure that products so identified have been manufactured under UL's Follow-Up Service. Only those products bearing the UL Mark should be considered to be Certified and covered under UL's Follow-Up Service. Always look for the Mark on the product.

UL permits the reproduction of the material contained in the Online Certification Directory subject to the following conditions: 1. The Guide Information, Assemblies, Constructions, Designs, Systems, and/or Certifications (files) must be presented in their entirety and in a non-misleading manner, without any manipulation of the data (or drawings). 2. The statement "Reprinted from the Online Certifications Directory with permission from UL" must appear adjacent to the extracted material. In addition, the reprinted material must include a copyright notice in the following format: "© 2020 UL LLC"

UL Product iQ™

XPTQ7.E4466 - Transformers, General Purpose Certified for Canada

Transformers, General Purpose Certified for Canada

See General Information for Transformers, General Purpose Certified for Canada

JEFFERSON ELECTRIC INC E4466
9650 S FRANKLIN DR
FRANKLIN, WI 53132-8847 USA

Dry type, auto transformers, Model(s) 415 followed by a four (4) place number/letter, followed by a three (3) place number/letter.

Dry type, auto transformers, Model(s) 515 followed by a four (4) place number/letter, followed by a three (3) place number/letter.

General purpose transformers rated 10 KVA or less, Model(s) 413 followed by a four (4) place number/letter, followed by a three (3) place number/letter.

General purpose transformers rated 10 KVA or less, Model(s) 416 followed by a four (4) place number/letter, followed by a three (3) place number/letter.

General purpose transformers rated 10 KVA or less, Model(s) 513 followed by a four (4) place number/letter, followed by a three (3) place number/letter.

General purpose transformers rated 10 KVA or less, Model(s) 516 followed by a four (4) place number/letter, followed by a three (3) place number/letter.

Industrial control transformer, 50 VA thru 5000 VA rating, Model(s) 631 Series , followed by 11 through 26, followed by 00 through 14, or 99, followed by 000, 001, 10x, 20x, 30x, or 70x

Industrial control transformers, Model(s) Series 631-A[@], Series 631-B[@], Series 631-C[@]

Transformers rated over 10 KVA, Model(s) 411 followed by a four (4) place number/letter, followed by a three (3) place number/letter.

Transformers rated over 10 KVA, Model(s) 511 followed by a four (4) place number/letter, followed by a three (3) place number/letter.

[@] - followed by a four (4) place number/letter, followed by a three (3) place number/letter. Each unit

Last Updated on 2019-10-25

The appearance of a company's name or product in this database does not in itself assure that products so identified have been manufactured under UL's Follow-Up Service. Only those products bearing the UL Mark should be considered to be Certified and covered under UL's Follow-Up Service. Always look for the Mark on the product.

UL permits the reproduction of the material contained in the Online Certification Directory subject to the following conditions: 1. The Guide Information, Assemblies, Constructions, Designs, Systems, and/or Certifications (files) must be presented in their entirety and in a non-misleading manner, without any manipulation of the data (or drawings). 2. The statement "Reprinted from the Online Certifications Directory with permission from UL" must appear adjacent to the extracted material. In addition, the reprinted material must include a copyright notice in the following format: "© 2020 UL LLC"

Certification

Manufacturer: Larson Electronics LLC
Address: 9419 US-HWY 175
Kemp, Texas 75143

Declare the following equipment conforms to the standard(s) as listed:

Model: MT Series
Description: Transformers

Evaluated Listings:

CE: DIRECTIVE 2014/35/EU - LOW VOLTAGE DIRECTIVE
CE: DIRECTIVE 2014/30/EU - EMC DIRECTIVE
CE: Regulation (EC) No 1907/2006 - REACH REGULATION
CE: DIRECTIVE 2015/863/EU - ROHS DIRECTIVE

The MT series complies with the essential protection requirements of the European Parliament of the Council Directive for Low Voltage Directive, EMC Directive, REACH Regulation, and RoHS Directive. This certification applies to all specimens manufactured in accordance to the manufacture's drawings.

Signed for and on behalf of: Larson Electronics, LLC
Place of issue: Kemp, TX

Signature: James Thomas

Name: James Thomas
Position: Operations Manager

LARSON ELECTRONICS LLC • 9419 E US HWY 175 • KEMP, TX 75143
p: 1-800-369-6671 • intl: 903-498-3363 • f: 903-498-3364 • sales@larsonelectronics.com

Certification

Manufacturer: Larson Electronics LLC
Address: 9419 US-HWY 175
Kemp, Texas 75143

Declare the following equipment conforms to the standard(s) as listed:

Model: MT Series
Description: Transformers

Evaluated Listings:

CE: Regulation (EC) No 1907/2006 - REACH REGULATION
CE: DIRECTIVE 2015/863/EU - ROHS DIRECTIVE

This is to certify that products offered by Larson Electronics LLC comply with the Reduction of Hazardous Substances (RoHS) directives. Directive 2002/95/EC became effective on 1 July 2006. It restricts the use of six substances in the manufacture of electrical and electronic equipment. This directive was revised in June 2011 and is now referred to as directive 2011/65/EU. Directive 2015/863/EU amending Annex II to Directive 2011/65/EU announced plans to add four substances from 22 July 2019.

We hereby certify that the equipment specified above conforms to the Directive(s) by containing less of the restricted substances than the stated limits.

Signed for and on behalf of: Larson Electronics, LLC
Place of issue: Kemp, TX

Signature: James Thomas

Name: James Thomas
Position: Operations Manager

LARSON ELECTRONICS LLC • 9419 E US HWY 175 • KEMP, TX 75143
p: 1-800-369-6671 • intl: 903-498-3363 • f: 903-498-3364 • sales@larsonelectronics.com

Certification

Manufacturer: Larson Electronics LLC
Address: 9419 US-HWY 175
Kemp, Texas 75143

Declare the following equipment conforms to the standard(s) as listed:

Model: MT Series
Description: Transformers

Evaluated Listings:

CE: Regulation (EC) No 1907/2006 - REACH REGULATION

This letter establishes the opinion of Larson Electronics LLC regarding the status, under the current European Union (“EU”) Regulations on Registration, Evaluation, Authorization, and Restriction of Chemical Substances (“REACH”).

REACH does not apply to manufactured products which are referred to as “completed articles”. Substances (chemicals) are subject to REACH registration, NOT products.

In addition, Articles are exempt from the REACH requirements if (a) the Article does not contain a substance of very high concern or candidate substance in an amount exceeding 0.1% weight by weight, and (b) if substances present in the Article in excess of 1 ton per year per importer are not expected nor intended to be released.

Based on communication with our raw material suppliers, we conclude that to the best of our knowledge our products requiring REACH compliance do not contain any of the currently listed SVHC in concentrations of 0.1% or above.

Accordingly, we foresee no registration or pre-registration requirement for the products we supply.

Signed for and on behalf of: Larson Electronics, LLC
Place of issue: Kemp, TX

Signature: James Thomas

Name: James Thomas
Position: Operations Manager

LARSON ELECTRONICS LLC • 9419 E US HWY 175 • KEMP, TX 75143
p: 1-800-369-6671 • intl: 903-498-3363 • f: 903-498-3364 • sales@larsonelectronics.com

Frequently Asked Questions (FAQ)