Larson Electronics LLC
9419 E US HWY 175, Kemp, TX 75143
Phone: 800.369.6671

www.LarsonElectronics.com
Email: sales@LarsonElectronics.com
Fax: 903.498.3364

MPD-CM1-NTL.20AB-SE1SM-AA-1.L10-M1

1 KVA Mini Portable Power Distro, 480V-277V 1PH, L8-20FI Inlet, L7-15R Receptacle - N3R

Product ID: 292762



Larson Electronics LLC manufactures a wide variety of products, including custom built to spec designs. The pictures displayed for this unit are a general representation of form factor for the product line and may not accurately represent this exact configuration in every detail due to custom builds and changes between similar products in our standard catalog. The specifics for this configuration are listed in the specification table and supporting documentation (CAD files, Dimensional Drawing, Name Plate Diagram, Wiring Diagram, etc.). This means that specific details (receptacles, plugs, wires, connections, mounting brackets, external finishes, etc.) may not be accurately represented in images vs specifications. Please review specifications and do not order based solely on images.

This unit is Made In USA - Manufactured in Texas

MPD-CM1-NTL.20AB-SE1SM-AA-1.L10-M1 - Portable Spider Box

Line In: L8-20FI NEMA 20A Twist-Lock Inlet [480V]
Line-in Cord Cap: N/A
Primary Voltage (V): 480V AC
Primary Phase (PH): 1-Phase (1PH)
Primary Frequency (HZ): 60 Hz (60-cycles)
Primary Panel: 480V 1PH 4A N3R
Primary Breaker: (1) 4A 2P MCB [480V]
Primary Protection: MCB Circuit Breaker; Weather-Proof Cover
Transformer (KVA): 1 KVA 480V to 277V 1PH N3R
Secondary Voltage (V): 277V AC
Secondary Phase (PH): 1-Phase (1PH)
Secondary Frequency (HZ): 60 Hz (60-cycles)
Secondary Panel: 277V 1PH 2A N3R
Secondary Breakers: (1) 2A 1P MCB [277V]
Secondary Outlets: (1) L7-15R NEMA Twist-Lock [277V]
Secondary Protection: MCB Circuit Breaker; Weather-Proof Cover
Form Factor: Blue Powder Coated Portable w/ Base Stand
Frame Finish: High-strength TGIC Polyester Powder Coated Blue
Dimensions: -
Weight: -

Larson Electronics manufactures a wide variety of custom power distribution systems. The pictures displayed for this unit are a general representation of form factor and may not accurately represent this exact configuration in every detail due to being custom builds. The specifics for this configuration are listed in the specification table and one-line diagram.

Ratings

Max Primary OCP: 4A @ 480V
Max Secondary Output: 2A @ 277V
NEMA 3R Indoor or Outdoor Use
Made in the USA
NRTL Certified to UL 1640

Powder Coat Finish Standards:

Complies with ASTM D-523
Complies with ASTM D-3359
Complies with ASTM D-522
Complies with ASTM D-3363
Complies with ASTM D-2794

Special Orders- Requirements

Contact us for special requirements

Phone: 1-214-616-6180
Toll Free: 1-800-369-6671
Fax: 1-903-498-3364
E-mail: sales@larsonelectronics.com

All grounding shall comply with state and local codes and meet the minimum requirements of the National Electronic Code section 250

This unit is Made In USA - Manufactured in Texas

The Larson Electronics MPD-CM1-NTL.20AB-SE1SM-AA-1.L10-M1 portable power distribution converts single-phase 480V AC input voltage and steps it down to single-phase 277V AC output voltage. All system components are protected by a powder coated steel enclosure with a top located handle for mobility.

The MPD-CM1-NTL.20AB-SE1SM-AA-1.L10-M1 portable wheeled spider box from Larson Electronics is built to provide operators with a reliable source of 277V power. This spider box is designed for portability and convenience as well as durability. Featuring an elevated base platform for protection from standing water and weatherproof construction, the MPD-CM1-NTL.20AB-SE1SM-AA-1.L10-M1 is ideal for powering 277V equipment and lighting in construction, entertainment, job-site, marine and outdoor locations where generators are providing the power. This portable spider box features one L7-15R NEMA twist-lock receptacle that provide sealed and secure connections for one device. The receptacle provides 277V for powering high voltage lighting and equipment without the need for running additional extension cords. The MPD-CM1-NTL.20AB-SE1SM-AA-1.L10-M1 power distribution unit features short circuit and overload protection. In the instance of circuit overload, the unit automatically shuts down to protect the unit from damage and operators manually restart the system.

Operation: A 20-amp L8-20FI 480V NEMA twist-lock inlet brings single-phase 480V AC power to the primary side of the system and passes power to the transformer. The NEMA 3R 1 KVA transformer converts single-phase 480V AC to single-phase 277V AC and passes the current to the secondary side of the system. The secondary side contains one 2-amp 1-pole 277V miniature circuit breaker protecting one 15-amp 277V L7-15R NEMA twist-lock receptacle.

Protective Construction: The housing on the MPD-CM1-NTL.20AB-SE1SM-AA-1.L10-M1 is constructed from powder coated steel with a NEMA 3R enclosure rating. The angled base and low center of gravity ensure this low voltage transformer does not tip over when in the field. The entire unit is powder coated with glossy blue finish for corrosion resistance and aesthetics. A top located adjustable push handle allows operators to guide this unit through the workspace. The power distribution system is constructed of steel with a polyester powder coated blue finish for durability against dirt, moisture and mild corrosion. This special coating creates a high-strength barrier for protection from accidental bumps and scratches. The TGIC polyester powder coat finish offers reliable resistance against chemicals, UV light (sun light) and degrading elements in outdoor locations. Our powder coating solution ensures robust color retention for many years without fading. Custom colors, such as black, grey, desert tan or forest green, and galvanized finishes are available upon request. Non-standard powder coat colors or galvanized finishes may increase price and lead times. This temporary power distribution solution can be modified to meet the needs of job-site receptacle requirements. Larger units are available upon request and can be equipped with skids or trailer mount.

Certification: All units are built in accordance to NFPA 70 (National Electric Code) and NRTL certified to UL 1640. All equipment is NEMA 3R rated for indoor and outdoor use and provide a degree of protection against dirt, water, and ice. NEMA 4 and NEMA 4X equipment can be equipped upon request.

Grounding: Transformer is grounded to the frame and we provide a grounding lug on the frame for the earth ground.

~Please check all motor loads for dual rated motors that will work 208 or 240.~

Applications: This power distribution system is ideal for indoor or outdoor use and applications including but not limited to, construction sites, plant maintenance, plant turnarounds, shows, exhibits, and shipyard operations. These power distribution systems are popularly used in applications where external power sources are often necessary. We also offer class rated transformers for use within explosion proof and hazardous location environments.

Custom Built Systems Available: Larson Electronics is a manufacturer and we can build portable power distribution systems to your specifications. Although we

carry several models of portable power distribution systems in stock, we can deliver custom ordered units almost as quickly as our prebuilt units. If this model does not meet your needs, please contact us at 1-800-369-6671 or sales@larsonelectronics.com to discuss your specific requirements.

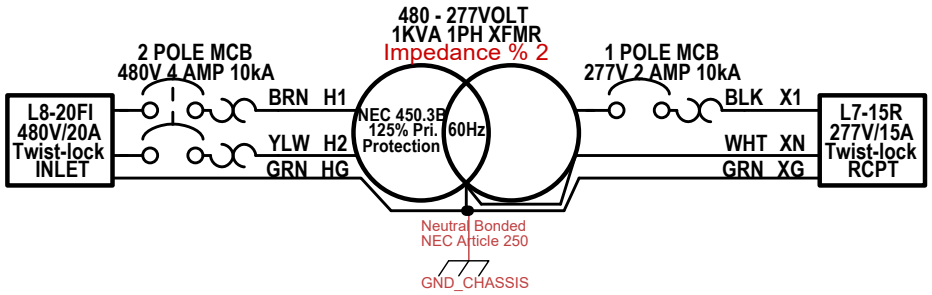

WIRE LEGEND

ID	TYPE	DESCRIPTION	WIRE SIZE
H1	CABLE	600V THHN BROWN	#12 AWG cu
H2	CABLE	600V THHN YELLOW	#12 AWG cu
HG	CABLE	600V THHN GREEN	#12 AWG cu
X1	CABLE	600V THHN BLACK	#12 AWG cu
XN	CABLE	600V THHN WHITE	#12 AWG cu
XG	CABLE	600V THHN GREEN	#12 AWG cu

USER NOTES:

IEC 60076 permits +/- 10% tolerance in percentage impedance at the manufacturer's end.

Title: MPD-CM1-NTL.20AB-SE1SM-AA-1.L10-M1		
Author: David Downs		
File: :\U ... 480V 4A 1PH 1KVA 277V 2A 1PH MCB.dsn		Document
Revision: 1.0	Date: 02/24/2023	Sheets: 1 of 1

REV	DESCRIPTION	DATE
A	PRODUCTION RELEASE	10/12/2023

MPD-CM1-NTL.20AB-SE1SM-AA-1.L10-M1

LARSON ELECTRONICS®

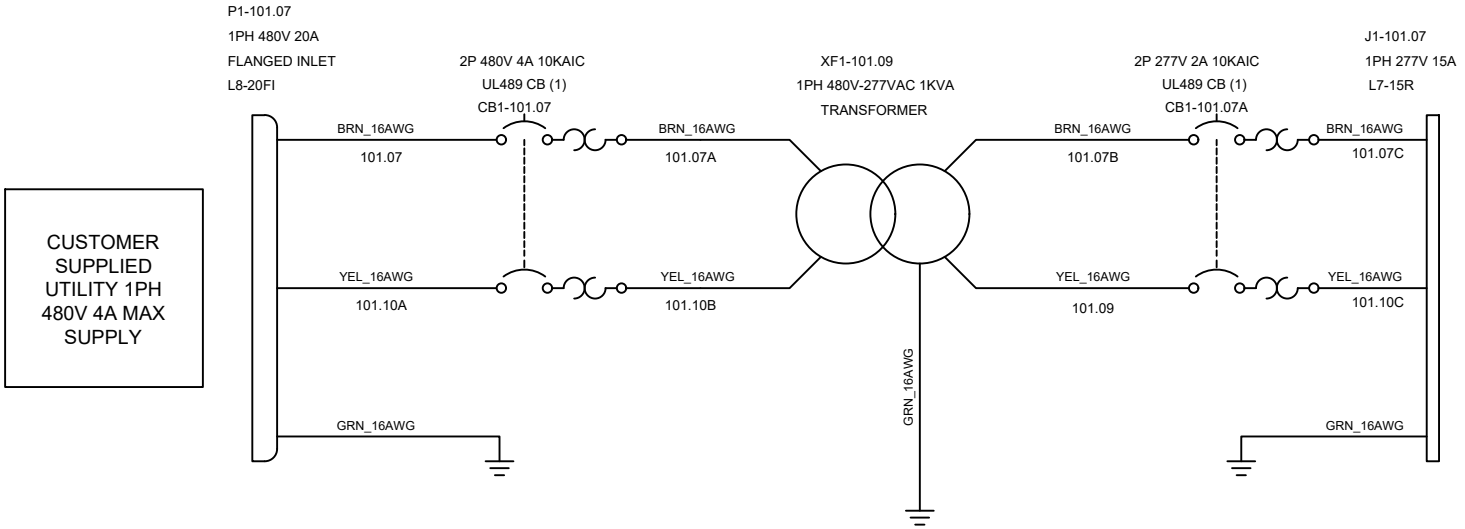

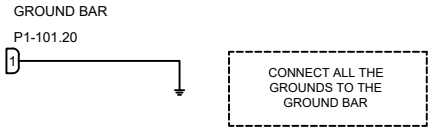

TAGS	QTY	CATALOG	DESCRIPTION
P1-101.07	1	N/A	Turnlok® Flanged Inlet, 3-Wire 20A 480V, L8-20FI
J1-101.07	1	N/A	277 VAC, 15 A, 2 Poles, 3 Wires, NEMA L7-15R
P1-101.20	1	UNV00013942C	GROUND BAR KIT
CB1-101.07A	1	N/A	2P 277VAC 2A UL489 DIN RAIL MOUNT BREAKER
CB1-101.07	1	N/A	2P 480V 4A UL489 DIN RAIL MOUNT BREAKER
XF1-101.09	1	UNV00012252	480/277-208/277VAC 1PH 1KVA TRANSFORMER

LARSON ELECTRONICS
9419 E US HWY 175,
KEMP, TX 75143

TITLE: MPD-CM1-NTL.20AB-SE1SM-AA-1.L10-M1

DRAWN BY	DATE	REV
S.Desai	10/12/2023	A
CHECKED BY	SHEET #	DRAWING #
J.Maldonado	1 OF 1	101


Larson Electronics
1-800-369-6671
Sales@LarsonElectronics.com


Larson Electronics
1-800-369-6671




Larson Electronics
1-800-369-6671
Sales@LarsonElectronics.com

Frequently Asked Questions (FAQ)