Larson Electronics LLC
9419 E US HWY 175, Kemp, TX 75143
Phone: 800.369.6671

www.LarsonElectronics.com
Email: sales@LarsonElectronics.com
Fax: 903.498.3364

HAL-EMG-48-2L-LED-45B

56W Hazardous Location Light Emergency Backup Fixture, Aluminum, 2 LED Lamps, Offset Surface Mount Brackets, Corrosion Resistant, Marine Application, C1D2/C2D2

Product ID: 292109



Larson Electronics LLC manufactures a wide variety of products, including custom built to spec designs. The pictures displayed for this unit are a general representation of form factor for the product line and may not accurately represent this exact configuration in every detail due to custom builds and changes between similar products in our standard catalog. The specifics for this configuration are listed in the specification table and supporting documentation (CAD files, Dimensional Drawing, Name Plate Diagram, Wiring Diagram, etc.). This means that specific details (receptacles, plugs, wires, connections, mounting brackets, external finishes, etc.) may not be accurately represented in images vs specifications. Please review specifications and do not order based solely on images.

HAL-EMG-48-2L-LED-45B - Hazardous Area Dimmable LED Offshore Emergency Light

Listing: NRTL Listed to United States, Canada
Lamp Technology: LED
Surface Mount Dimensions: 53.74"-L x 7.03"-W x 9.11"-H
Pendant Mount Dimensions: 53.74"-L x 7.03"-W x 7.62"-H
Weight: 22.7 lb
Voltage: Universal 120-277V AC, 50/60 Hz or 11-25V AC/DC
Lamp Qty: (2)
Lamp Wattage: 28 Watts Per Lamp
Total Watts: 56 Watts
Lamp Lumens: 3,500 lms
Lumens on Battery Power: 3,500 lms
Total Lumens: 7,000 lms
Luminous Efficacy: 125 Lm/w
Lamp Life Expectancy: 50,000+ Hours
Lamp Color Temperature: 5600K, 5000K, 4500K, or 3000K
Color Rendering Index: >80 CRI
Lamp Type: LED
Lamp Base: -
Replacement Lamp: -
Beam Angle: 150°
Dimming Function: No
Lighting Configuration: Flood
Power Efficiency: 90%
Power Factor: >0.95
Amps: 0.47A @ 120V, 0.25A @ 220V, 0.23A @ 240V, 0.20A @ 277V
Battery AC Input Voltage: 120/277V AC 60 Hz
Battery AC Input Current: 90 mA

Ratings/Approvals

Listed for United States and Canada
Class I, Division 2, Groups A, B, C, D
Class II, Division 2, Groups F, G
NRTL Certified to UL 844
NRTL Certified to UL 1598A Marine Type (Saltwater)
NRTL Certified to C22.2 No. 137
NRTL Certified to C22.2 No. 250.0
Meets USCG Specifications
California Title 24 Compliant
T4 Temperature Rating
Non-Corrosive Construction
Made in the USA
BAA Compliant
Silicone Free
CE Certified
Field Serviceable
Failsafe Lighting
Emergency Battery Backup
90+ Minute Runtime

Battery AC Input Power Rating: 9.5W
Battery Output Current: 120V @ 165mA - 277V @ 72mA
Illumination Time: 90+ Minutes
Battery Type: High Temp, Maintenance Free, Nickel Cadmium
Battery Lifespan: 7 to 10 Years
Battery Charge Current: 250 mA
Battery Recharge Time: 24 Hours
Ambient Operating Temp Range: -40°C to +65°C
Operating Temp Rating: T4
Minimum Operating Temp: -30°C
Maximum Case Temp: +90°C
Housing Material: Copper Free Aluminum Extrusion Housing
Lens Material: Shatter/Impact Resistant Acrylic Diffuser
Gasket Material: Neoprene
Mounting: Offset Surface Mount Bracket
Wiring Hub: 1/2" or 3/4" NPT

Special Orders - Requirements
Contact us for special requirements

Toll Free: 1-800-369-6671
Intl: 1-214-616-6180
Fax: 1-903-498-3364
E-mail: sales@larsonelectronics.com

Made in the USA

The HAL-EMG-48-2L-LED-45B from Larson Electronics is a Hazardous Area LED Emergency Light Fixture that is NRTL Listed for United States and Canada, approved for Class I Division 2 Groups A, B, C and D, NRTL Certified to UL 1598A, and ideal for hazardous locations where flammable chemical/petrochemical vapors may be occasionally encountered. This hazardous location LED light has a T4 temperature rating and carries a United States Coast Guard approval, making it ideal for applications such as oil rigs, ships, offshore applications, petrochemical, manufacturing, chemical storage, and water treatment centers. The HAL-EMG-48-2L-LED-45B is equipped with offset surface mount brackets.

This four foot long, two lamp LED fixture is ideal for operators seeking a top quality hazardous location light that will reduce operating costs, improve lighting quality, and reduce downtime incurred from frequent servicing intervals. The HAL-EMG-48-2L-LED-45B fixture is a Class I Division 2 Groups A, B, C and D hazardous area LED light that takes the reliability and efficiency of a fluorescent fixture and adds even longer lamp life and efficiency with high output LEDs. This fixture is T4A temperature rated and comes standard with our high power 28 watt LED lamps. The lamps are protected by an aluminum framed shatter and heat resistant clear acrylic lens secured with ten draw latches and the fixture is constructed of copper free aluminum alloy. The lamp reflector is corrosion resistant heavy gauge aluminum and coated with a high gloss reflective finish.

This emergency backup LED light works, mounts and is wired like our HALP-48-2L-LED explosion proof LED light fixtures. The main difference is that we add a battery backup unit that adds emergency light functionality to the fixture. With an integrated emergency ballast, this explosion proof LED light will continue to operate one LED lamp for 90 minutes at 3,500 lumens after the main electrical power to the light is severed. Once standard electrical power is restored, the emergency battery pack will be recharged. The battery backup unit includes a switched leg for turning the light fixture on/off without kicking the unit into emergency mode.



Click Photo to Enlarge

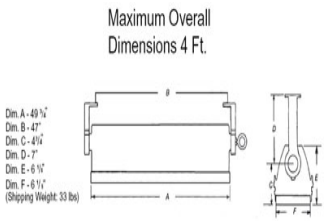

Click Photo to Enlarge

Larson Electronics LLC
9419 E US HWY 175, Kemp, TX 75143
Phone: 800.369.6671

www.LarsonElectronics.com
Email: sales@LarsonElectronics.com
Fax: 903.498.3364



Surface Mount



Pendant Mount

We now offer our second generation LED tube lamps with this fixture which have increased this hazardous location light's performance. This two lamp HAZLOC LED linear fixture is lighter in weight and produces more light than hazardous location fluorescent fixtures. The four foot long LED tube design bulbs included with this unit are rated at 50,000 hours of service life, which is over twice as long as standard T8 bulbs.

This fixture carries a T4A temperature rating and is NRTL Certified to UL 595 and UL 1598A Marine Type approved for use in marine environments. The HAL-EMG-48-2L-LED-45B is weatherproof and provides operators in hazardous locations with a highly efficient, reliable and affordable lighting solution for open areas where flammable chemicals and vapors may occasionally be present. Click here to read the NEC description for explosion proof and hazardous locations.

We have eliminated the ballast normally associated with fluorescent fixtures which reduces overall weight and overall complexity of installation. There is no ballast in this unit and the included LEDT8-28W-V1 LED lamps have a 50,000+ hour service life, both of which result in extreme efficiency and greatly reduced maintenance costs. The solid state design of the LED lamps give this fixture superior resistance to damage from vibration, extremes in temperature and a lamp service life over twice that of standard fluorescent bulbs. This second generation lamp is offered in 5600K cool white, 5000K natural white, 4500K natural white, and 3000K warm white. Please make your selection when ordering.

Unlike the glass tube design of traditional fluorescent lamps, these LED T-Style lamps have no filaments or fragile housings to break during operation. Instead of using a combination of gases to produce light, light emitting diodes (LEDs) use semi-conductive materials that illuminate when electric current applied and emitting light. The LED assembly is mounted to the "tube" constructed from extruded aluminum, with a polycarbonate lens protecting the LEDs. With LED lights, there is no warm up time or cool down time before re-striking and provide instant illumination when powered on, adding to the reliability of LED technology. By nature, LED light sources run significantly cooler than fluorescent lamps, reducing the chance of accidental burns, and increased temperatures due to heat emissions. This solid state design of light emitting diodes provides a more reliable, stable, durable, and energy efficient light source over traditional fluorescent lighting.

The 28 watt LED lamps produce 30% more illumination than standard T8 bulbs while offering lower amp draw and increased reliability. Each lamp produces 3,500 lumens at 125 lumens per watt, for a combined 7,000 total lumen light output. An HAL-48-2L-T8 hazardous location fluorescent light, with a combined total of 64 watts, draws 0.54 amps at 120 volts AC. This LED version of the same light, with a total of 56 watts, draws only 0.47 amps at 120 volts AC. This results in a lower amp draw while still providing increased reliability and light output.

The HAL-EMG-48-2L-LED-45B is universal voltage, not multi-tap, and operates on any voltage from 120V to 277V AC 50/60hz without any modifications. The internal LED driver is a "smart" driver, sensing the incoming voltage and adjusting accordingly to provide the current required by the lamp. This allows operators to simply wire the fixture to voltage within the 120-277V range, no modifications required. This includes commonly found voltages such as 120V 60Hz, 220V 50Hz, 240V 60Hz, and 277V 60Hz. We also offer a 12/24V AC/DC version for low voltage applications for AC or DC power. Low voltage fixtures require no modifications

between 12V and 24V power sources, nor between alternating and direct current supply.

Energy Consumption Comparison

	T5HO	T8	LED
Wattage	108 watts	64 watts	56 watts
Amp Draw @ 120V AC	0.90 amps	0.54 amps	0.47 amps
Amp Draw @ 220V AC	0.49 amps	0.29 amps	0.25 amps
Amp Draw @ 240V AC	0.45 amps	0.27 amps	0.23 amps
Amp Draw @ 277V AC	0.39 amps	0.24 amps	0.20 amps
Amp Draw @ 12V DC	9 amps	5.34 amps	4.67 amps
Amp Draw @ 24V DC	4.5 amps	2.67 amps	2.34 amps
Lamp Life Expectancy	20,000 hours	24,000 hours	50,000 hours
Operation cost per year (12hs/day @ 12c/kWh)	$56.77	$33.64	$29.43

Adjustable Surface Mount Brackets: Each bracket is cinched to the bracket mounting peg on each side of the light. The angle of the bracket is set by tightening two cap screws on either side of the bracket. The cap screws act as a set screw. The bracket itself is mounted via a single bolt hole at the top the bracket. There are two brackets, one on each end of the light. Once the brackets are mounted to a surface (ceiling, floor or wall), the light fixture can be removed from the brackets by loosening the cap screws that hold the bracket to the mounting peg.
The included mounting brackets extend the fixture out and away from the mounting surface, allowing operators to pivot the light up to 45° in either direction after installation. This is ideal for paint spray booths in wall mount applications to ensure effective and even lighting on all sides of the objects to be painted.
Suggested Applications: Aircraft maintenance, oil drilling rigs, refineries, marine and salt water environments, ships, tankers, offshore, solvent and cleaning areas, gas processing plants, chemical manufacturing, waste treatment plants, gas processing plants.
At Larson Electronics, we do more than meet your lighting needs. We also provide replacement, retrofit, and upgrade parts as well as industrial grade power accessories. Our craftsmen can custom build any lighting system and/or accessories to fit the unique demands of your operation. A commitment to honesty, quality, and dependability has made Larson Electronics a leader in the lighting and electronics business since 1973. Contact us today at 800-369-6671 or message sales@larsonelectronics.com for more information about our custom options tailored to meet your specific industry needs.

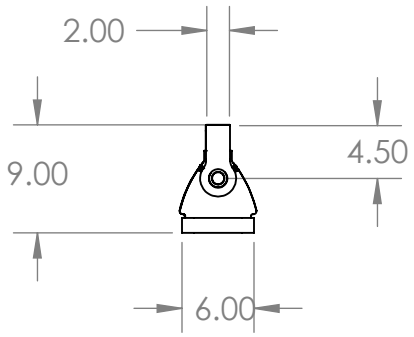

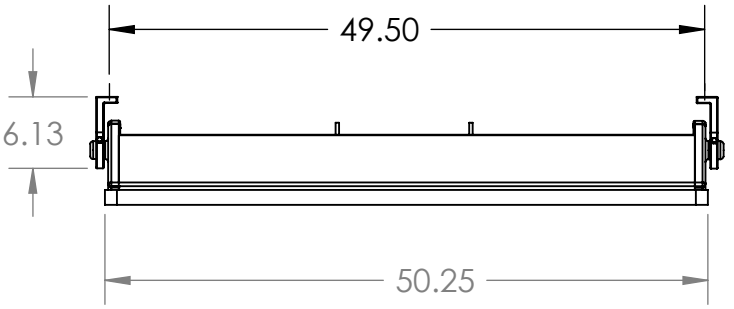

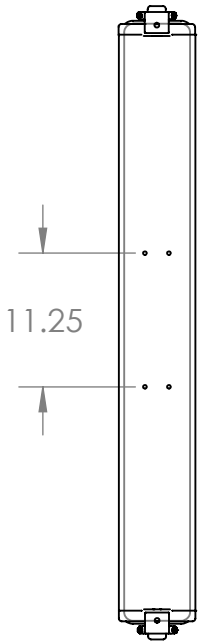

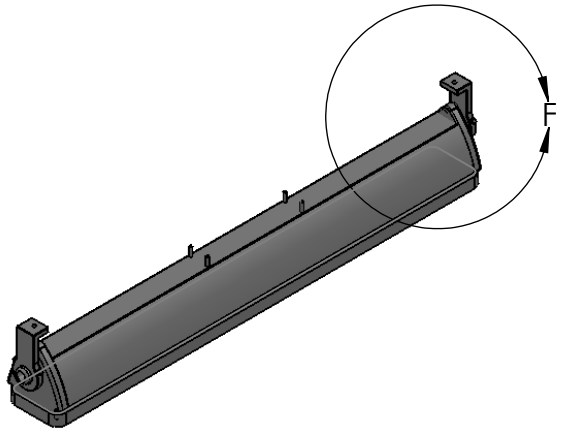

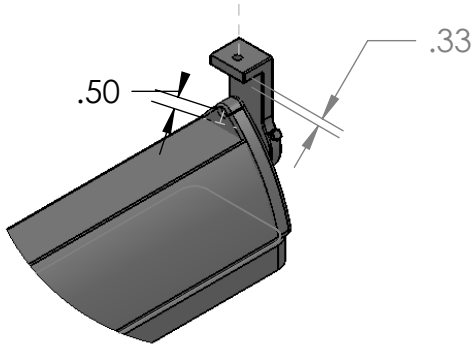

		UNLESS OTHERWISE SPECIFIED:		NAME	DATE
		DIMENSIONS ARE IN INCHES TOLERANCES: FRACTIONAL<MOD-PM> ANGULAR: MACH<MOD-PM> BEND<MOD-PM> TWO PLACE DECIMAL <MOD-PM> THREE PLACE DECIMAL <MOD-PM>	DRAWN		
			CHECKED		
			ENG APPR.		
			MFG APPR.		
		INTERPRET GEOMETRIC TOLERANCING PER:	Q.A.		
		MATERIAL	COMMENTS:		
NEXT ASSY	USED ON	FINISH			
APPLICATION		DO NOT SCALE DRAWING			

TITLE:

SIZE A | DWG. NO. HAL-48-2L-R | REV

SCALE: 1:16 | WEIGHT: | SHEET 1 OF 1

PROPRIETARY AND CONFIDENTIAL

THE INFORMATION CONTAINED IN THIS DRAWING IS THE SOLE PROPERTY OF <INSERT COMPANY NAME HERE>. ANY REPRODUCTION IN PART OR AS A WHOLE WITHOUT THE WRITTEN PERMISSION OF <INSERT COMPANY NAME HERE> IS PROHIBITED.

5 4 3 2 1







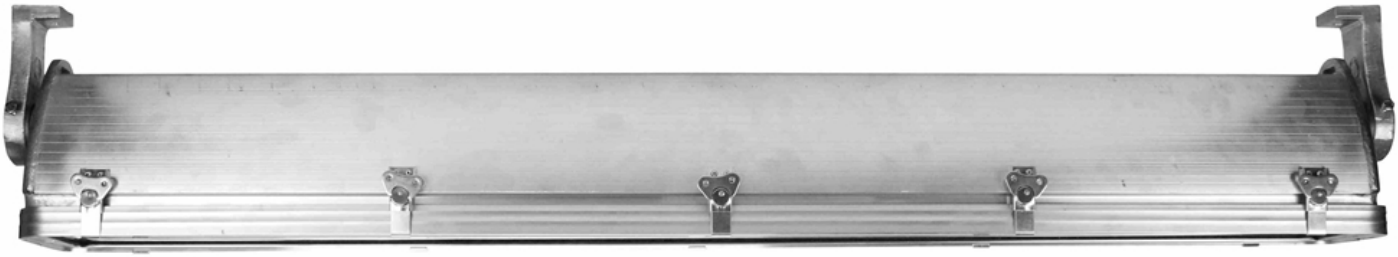

SAFETY DATA SHEET

HCS-2012 APPENDIX D TO §1910.1200

Version 1 **Issue Date** 21-Jan-2015
Product Name Nickel Cadmium Battery **Revision date** 21-Jan-2015

1. IDENTIFICATION OF THE SUBSTANCE/MIXTURE AND OF THE COMPANY/UNDERTAKING

Product identifier

Product Name	Nickel Cadmium Battery
Chemical Name	Nickel Cadmium Battery

Other means of identification

Recommended use of the chemical and restrictions on use

Recommended Use	Used in electric tools
Uses advised against	No information available

Details of the supplier of the safety data sheet

Supplier	Jiangsu Highstar Battery Manufacturing Co.,Ltd.
Address	No.306 Heping Road(s), Qidong City, Jiangsu, China
Postal Code	226200
Phone	0086-513-80795666
FAX	0086-513-83312306
E-mail	chenj@highstar.net.cn

Emergency telephone number

0086-513-80795666

2. HAZARDS IDENTIFICATION

GHS Classification

Not a dangerous substance or mixture according to the Globally Harmonized System (GHS)

Label elements

Symbols/Pictograms	None
Signal word	None
Hazard Statements	None
Precautionary Statements	
Prevention	None
Response	None
Storage	None
Disposal	None

Hazards not otherwise classified (HNOC)

No information available

Unknown acute toxicity

.?% of the mixture consists of ingredient(s) of unknown toxicity

3. COMPOSITION/INFORMATION ON INGREDIENTS

Chemical nature Mixture

Chemical Name	CAS No	Weight-%
Nickel	7440-02-0	10 - 25
Cadmium and compounds (as Cd)	7440-43-9	10 - 25
Cadmium hydroxide (Cd(OH)2)	21041-95-2	12 - 23
Nickel hydroxide	12054-48-7	6 - 14

CENTRE TESTING INTERNATIONAL CORPORATION
Build C,Hongwei Industrial Zone,Baoan 70 District,Shenzhen China
www.cti-cert.com E-mail:info@cti-cert.com
Hotline 400-6788-333

Iron	7439-89-6	10 - 13

4. FIRST AID MEASURES

Description of first aid measures

General advice	Remove contaminated clothing and shoes. If symptoms persist, call a physician.
Inhalation	Not an expected route of exposure. IF INHALED: Remove victim to fresh air and keep at rest in a position comfortable for breathing.
Skin Contact	Wash hands thoroughly after handling. .
Eye contact	Not an expected route of exposure. .
Ingestion	Rinse mouth Get medical attention Never give anything by mouth to an unconscious person

Most important symptoms and effects, both acute and delayed

No information available.

Indication of any immediate medical attention and special treatment needed

Treat symptomatically.

5. FIRE-FIGHTING MEASURES

Extinguishing media

Suitable extinguishing media	Use extinguishing measures that are appropriate to local circumstances and the surrounding environment.
Unsuitable extinguishing media	No information available.

Specific hazards arising from the chemical

Thermal decomposition can lead to release of irritating and toxic gases and vapors

Protective equipment and precautions for firefighters

As in any fire, wear self-contained breathing apparatus pressure-demand, MSHA/NIOSH (approved or equivalent) and full protective gear.

6. ACCIDENTAL RELEASE MEASURES

Personal precautions, protective equipment and emergency procedures

Evacuate personnel to safe areas
Ensure adequate ventilation, especially in confined areas
Remove all sources of ignition
Use personal protection recommended in Section 8

Methods and material for containment and cleaning up

Prevent further leakage or spillage if safe to do so
Pick up and transfer to properly labeled containers

Avoid release to the environment

7. HANDLING AND STORAGE

Precautions for safe handling

Handle in accordance with good industrial hygiene and safety practice
Ensure adequate ventilation, especially in confined areas
Avoid creating dust
Avoid contact with eyes
Wash thoroughly after handling
Use personal protection recommended in Section 8

CENTRE TESTING INTERNATIONAL CORPORATION
Build C,Hongwei Industrial Zone,Baoan 70 District,Shenzhen China
www.cti-cert.com E-mail:info@cti-cert.com
Hotline 400-6788-333

Conditions for safe storage, including any incompatibilities

Keep containers tightly closed in a dry, cool and well-ventilated place
Keep away from heat

8. EXPOSURE CONTROLS/PERSONAL PROTECTION

Control parameters

Chemical Name	ACGIH TLV	OSHA PEL	NIOSH IDLH	Denmark	European Union
Nickel (CAS #: 7440-02-0)	TWA: 1.5 mg/m^3 inhalable fraction	TWA: 1 mg/m^3 (vacated) TWA: 1 mg/m^3	IDLH: 10 mg/m^3 IDLH: 10 mg/m^3 Ni TWA: 0.015 mg/m^3 TWA: 0.015 mg/m^3 except Nickel carbonyl Ni	TWA: 0.05 mg/m^3	-
Cadmium and compounds (as Cd) (CAS #: 7440-43-9)	TWA: 0.01 mg/m^3 TWA: 0.002 mg/m^3 respirable fraction TWA: 0.01 mg/m^3 Cd TWA: 0.002 mg/m^3 Cd respirable fraction	TWA: 0.1 mg/m^3 fume applies to any operations or sectors for which the Cadmium standard is stayed or otherwise not in effect TWA: 0.2 mg/m^3 dust applies to any operations or sectors for which the Cadmium standard is stayed or otherwise not in effect TWA: 5 µg/m^3 (vacated) STEL: 0.3 ppm fume Ceiling: 0.3 mg/m^3 fume applies to any operations or sectors for which the Cadmium standard is stayed or otherwise not in effect Ceiling: 0.6 mg/m^3 dust applies to any operations or sectors for which the Cadmium standard is stayed or otherwise not in effect	IDLH: 9 mg/m^3 dust IDLH: 9 mg/m^3 Cd dust and fume	TWA: 0.005 mg/m^3	-
Cadmium hydroxide (Cd(OH)2) (CAS #: 21041-95-2)	TWA: 0.01 mg/m^3 Cd TWA: 0.002 mg/m^3 Cd respirable fraction	-	-	TWA: 0.005 mg/m^3	-
Nickel hydroxide (CAS #: 12054-48-7)	TWA: 0.2 mg/m^3 Ni inhalable fraction	TWA: 1 mg/m^3 Ni (vacated) TWA: 1 mg/m^3 Ni	IDLH: 10 mg/m^3 Ni TWA: 0.015 mg/m^3 except Nickel carbonyl Ni	TWA: 0.05 mg/m^3	-

Chemical Name	Latvia	France	Finland	Germany	Italy
Nickel (CAS #: 7440-02-0)	TWA: 0.05 mg/m^3	TWA: 1 mg/m^3	TWA: 1 mg/m^3 TWA: 0.1 mg/m^3	Skin	-
Cadmium and compounds (as Cd) (CAS #: 7440-43-9)	TWA: 0.01 mg/m^3 STEL: 0.05 mg/m^3	TWA: 0.05 mg/m^3	TWA: 0.02 mg/m^3 Skin	Skin	-
Nickel hydroxide (CAS #: 12054-48-7)	TWA: 0.05 mg/m^3	TWA: 1 mg/m^3	TWA: 0.1 mg/m^3	Skin	-

Chemical Name	Poland	Portugal	Spain	Switzerland	Netherlands
Nickel (CAS #: 7440-02-0)	TWA: 0.25 mg/m^3	TWA: 1.5 mg/m^3	TWA: 1 mg/m^3	TWA: 0.5 mg/m^3	-
Cadmium and compounds (as Cd) (CAS #: 7440-43-9)	TWA: 0.01 mg/m^3 TWA: 0.002 mg/m^3	TWA: 0.01 mg/m^3 TWA: 0.002 mg/m^3	TWA: 0.01 mg/m^3 TWA: 0.002 mg/m^3	Skin TWA: 0.015 mg/m^3	-
Nickel hydroxide (CAS #: 12054-48-7)	TWA: 0.25 mg/m^3	TWA: 0.2 mg/m^3	TWA: 0.2 mg/m^3	TWA: 0.05 mg/m^3	-

Chemical Name	Norway	United Kingdom	Australia	Austria	Belgium
Nickel (CAS #: 7440-02-0)	TWA: 0.05 mg/m^3 STEL: 0.15 mg/m^3	STEL: 1.5 mg/m^3 TWA: 0.5 mg/m^3	1 mg/m^3	-	-

CENTRE TESTING INTERNATIONAL CORPORATION Build C,Hongwei Industrial Zone,Baoan 70 District,Shenzhen China www.cti-cert.com E-mail:info@cti-cert.com Hotline 400-6788-333

Cadmium and compounds (as Cd) (CAS #: 7440-43-9)	TWA: 0.05 mg/m^3 STEL: 0.15 mg/m^3	STEL: 0.075 mg/m^3 TWA: 0.025 mg/m^3	0.01 mg/m^3	-	-
Cadmium hydroxide (Cd(OH)2) (CAS #: 21041-95-2)	-	-	0.01 mg/m^3	-	-
Nickel hydroxide (CAS #: 12054-48-7)	TWA: 0.05 mg/m^3 STEL: 0.15 mg/m^3	TWA: 0.5 mg/m^3	-	-	-

Appropriate engineering controls

Showers
Eyewash stations
Ventilation systems

Individual protection measures, such as personal protective equipment

Respiratory protection	If exposure limits are exceeded or irritation is experienced, NIOSH/MSHA approved respiratory protection should be worn. Positive-pressure supplied air respirators may be required for high airborne contaminant concentrations. Respiratory protection must be provided in accordance with current local regulations.
Hand Protection	Wear protective gloves.
Eye/face protection	No special technical protective measures are necessary.
Skin and body protection	Wear suitable protective clothing.

9. PHYSICAL AND CHEMICAL PROPERTIES

Information on basic physical and chemical properties

Appearance	Solid
Color	No information available
Odor	Odorless
Odor Threshold	Not determined
pH	Not determined
Melting point/freezing point	Not determined
Boiling point / boiling range	Not determined
Flash point	Not applicable
Evaporation rate	Not determined
Flammability (solid, gas)	Not determined
Flammability Limit in Air	Not determined
Vapor Pressure	Not applicable
Vapor density	Not determined
Density	Not determined
Relative density	Not determined
Bulk density	Not determined
Specific gravity	Not determined
Water solubility	Not determined
Partition coefficient (LogPow)	Not determined
Autoignition temperature	Not determined
Decomposition temperature	Not determined
Kinematic viscosity	Not determined
Dynamic viscosity	Not determined
Explosive properties	Not an explosive
Oxidizing properties	Not determined

Other information

No information available

10. STABILITY AND REACTIVITY

Reactivity

Stable under recommended storage and handling conditions (see SECTION 7, handling and storage).

CENTRE TESTING INTERNATIONAL CORPORATION
Build C,Hongwei Industrial Zone,Baoan 70 District,Shenzhen China
www.cti-cert.com E-mail:info@cti-cert.com
Hotline 400-6788-333

Chemical stability

Stable under normal conditions

Possibility of Hazardous Reactions

None under normal processing

Conditions to avoid

Strong heating. Incompatible materials

Incompatible materials

Strong acids Strong bases Strong oxidizing agents

Hazardous Decomposition Products

None known based on information supplied

11. TOXICOLOGICAL INFORMATION

Information on likely routes of exposure

Inhalation	Inhalation of vapors in high concentration may cause irritation of respiratory system
Eye contact	Contact with eyes may cause irritation
Skin Contact	Substance may cause slight skin irritation
	Ingestion may cause irritation to mucous membranes

Information on toxicological effects

Acute toxicity

Chemical Name	Oral LD50	Dermal LD50	Inhalation LC50
Nickel (CAS #: 7440-02-0)	> 9000 mg/kg (Rat)	-	-
Cadmium and compounds (as Cd) (CAS #: 7440-43-9)	= 2330 mg/kg (Rat)	-	= 25 mg/m^3 (Rat) 30 min
Nickel hydroxide (CAS #: 12054-48-7)	-	-	= 1200 mg/m^3 (Rat) 4 h
Iron (CAS #: 7439-89-6)	98.6 g/kg bw (rat)	-	-

Skin corrosion/irritation

Non-irritating to the skin

Serious eye damage/eye irritation

No eye irritation

Sensitization

No information available

Germ cell mutagenicity

No information available

Carcinogenicity

This product does not contain any carcinogens or potential carcinogens as listed by OSHA, IARC or NTP

Chemical Name	ACGIH	IARC	NTP	OSHA
Nickel (CAS #: 7440-02-0)	-	Group 2B	Known Reasonably Anticipated	X
Cadmium and compounds (as Cd) (CAS #: 7440-43-9)	A2	Group 1	Known	X
Cadmium hydroxide (Cd(OH)2) (CAS #: 21041-95-2)	A2	-	-	-
Nickel hydroxide (CAS #: 12054-48-7)	A1	Group 1	Known	X

CENTRE TESTING INTERNATIONAL CORPORATION
Build C,Hongwei Industrial Zone,Baoan 70 District,Shenzhen China
www.cti-cert.com E-mail:info@cti-cert.com
Hotline 400-6788-333

Reproductive toxicity
No information available

STOT - single exposure
No information available

STOT - repeated exposure
No information available

Aspiration hazard
No information available

12. ECOLOGICAL INFORMATION

Ecotoxicity

Chemical Name	Algae/aquatic plants EC50	Fish LC50	Crustacea EC50
Nickel (CAS #: 7440-02-0)	0.18 mg/L/72h Pseudokirchneriella subcapitata 0.174 - 0.311 mg/L/96h Pseudokirchneriella subcapitata static	100 mg/L/96h Brachydanio rerio 1.3 mg/L/96h Cyprinus carpio semi-static 10.4 mg/L/96h Cyprinus carpio static	100 mg/L/48h Daphnia magna 1 mg/L/48h Daphnia magna Static
Cadmium and compounds (as Cd) (CAS #: 7440-43-9)	-	0.003: 96 h Oncorhynchus mykiss mg/L LC50 flow-through 0.006: 96 h Oncorhynchus mykiss mg/L LC50 static 0.002: 96 h Cyprinus carpio mg/L LC50 4.26: 96 h Cyprinus carpio mg/L LC50 semi-static 0.24: 96 h Cyprinus carpio mg/L LC50 static 21.1: 96 h Lepomis macrochirus mg/L LC50 flow-through 0.016: 96 h Oryzias latipes mg/L LC50 0.0004 - 0.003: 96 h Pimephales promelas mg/L LC50	0.0244: 48 h Daphnia magna mg/L EC50 Static
Iron (CAS #: 7439-89-6)	-	-	> 100 mg/L/48h (Daphnia magna)

Persistence and degradability
No information available

Bioaccumulative potential
No information available

Mobility in soil
No information available

Other adverse effects
No information available

13. DISPOSAL CONSIDERATIONS

Waste treatment methods

Disposal of wastes: Disposal should be in accordance with applicable regional, national and local laws and regulations

Contaminated packaging: Dispose of in accordance with federal, state and local regulations

Chemical Name	RCRA	RCRA - Basis for Listing	RCRA - D Series Wastes	RCRA - U Series Wastes

CENTRE TESTING INTERNATIONAL CORPORATION Build C,Hongwei Industrial Zone,Baoan 70 District,Shenzhen China www.cti-cert.com E-mail:info@cti-cert.com Hotline 400-6788-333

Nickel 7440-02-0	-	Included in waste streams: F006, F039	-	-
Cadmium and compounds (as Cd) 7440-43-9	-	Included in waste streams: F006, F039, K061, K069, K100	1.0 mg/L regulatory level	-

Chemical Name	California Hazardous Waste Status
Nickel 7440-02-0	Toxic powder Ignitable powder

14. TRANSPORT INFORMATION

It is considered as non-dangerous good by the ICAO, IATA, IMDG and TDG.

According to IATA DGR 56th Edition for transportation and International Maritime Dangerous Goods (IMDG Code 36th) and the Recommendation on the Transportation of Dangerous Goods-Model Regulation (18th)
The products are not subjects/subject to dangerous.

DOT / IMDG / IATA

UN/ID No. Not regulated
Proper shipping name Not regulated
Hazard Class Not regulated
Packing Group Not regulated
Special precautions No information available
Marine pollutant Not applicable

15. REGULATORY INFORMATION

International Inventories

Component	AICS	DSL/NDSL	EINECS/ELINCS	ENCS	IECSC	KECL	PICCS	TSCA
Nickel 7440-02-0 (10 - 30)	X	X	X	-	X	X	X	X
Cadmium and compounds (as Cd) 7440-43-9 (10 - 30)	X	X	X	-	X	X	X	X
Cadmium hydroxide (Cd(OH)2) 21041-95-2 (10 - 30)	X	X	-	-	X	-	-	-
Nickel hydroxide 12054-48-7 (10 - 30)	X	X	X	X	X	X	X	X
Iron 7439-89-6 (10 - 30)	X	X	X	-	X	X	X	X

"-" Not Listed
"X" Listed

US Federal Regulations

SARA 313

Section 313 of Title III of the Superfund Amendments and Reauthorization Act of 1986 (SARA). This product contains a chemical or chemicals which are subject to the reporting requirements of the Act and Title 40 of the Code of Federal Regulations, Part 372

Chemical Name	SARA 313 - Threshold Values %
Nickel - 7440-02-0	0.1
Cadmium and compounds (as Cd) - 7440-43-9	0.1
Nickel hydroxide - 12054-48-7	0.1

CENTRE TESTING INTERNATIONAL CORPORATION
Build C,Hongwei Industrial Zone,Baoan 70 District,Shenzhen China
www.cti-cert.com E-mail:info@cti-cert.com
Hotline 400-6788-333

SARA 311/312 Hazard Categories

Does not apply

CWA (Clean Water Act)

This product contains the following substances which are regulated pollutants pursuant to the Clean Water Act (40 CFR 122.21 and 40 CFR 122.42)

Chemical Name	CWA - Reportable Quantities	CWA - Toxic Pollutants	CWA - Priority Pollutants	CWA - Hazardous Substances
Nickel 7440-02-0	-	X	X	-
Cadmium and compounds (as Cd) 7440-43-9	-	X	X	-
Cadmium hydroxide (Cd(OH)2) 21041-95-2	-	X	-	-
Nickel hydroxide 12054-48-7	-	X	-	X

CERCLA

This material, as supplied, contains one or more substances regulated as a hazardous substance under the Comprehensive Environmental Response Compensation and Liability Act (CERCLA) (40 CFR 302)

Chemical Name	Hazardous Substances RQs	CERCLA/SARA RQ	Reportable Quantity (RQ)
Nickel 7440-02-0	100 lb	-	RQ 100 lb final RQ RQ 45.4 kg final RQ
Cadmium and compounds (as Cd) 7440-43-9	10 lb	-	RQ 10 lb final RQ RQ 4.54 kg final RQ
Nickel hydroxide 12054-48-7	10 lb	-	RQ 10 lb final RQ RQ 4.54 kg final RQ

US State Regulations

California Proposition 65

This product contains the following Proposition 65 chemicals

Chemical Name	California Proposition 65
Nickel - 7440-02-0	Carcinogen
Cadmium and compounds (as Cd) - 7440-43-9	Carcinogen Developmental Male Reproductive
Cadmium hydroxide (Cd(OH)2) - 21041-95-2	Carcinogen
Nickel hydroxide - 12054-48-7	Carcinogen

U.S. State Right-to-Know Regulations

This product may contain substances regulated by state right-to-know regulations

Chemical Name	New Jersey	Massachusetts	Pennsylvania
Nickel 7440-02-0	X	X	X
Cadmium and compounds (as Cd) 7440-43-9	X	X	X
Nickel hydroxide 12054-48-7	X	X	X

16. OTHER INFORMATION

Revision Note

Issue Date	21-Jan-2015
Revision date	21-Jan-2015
Revision Note	Not applicable

Key or legend to abbreviations and acronyms used in the safety data sheet

TWA - TWA (time-weighted average)
STEL - STEL (Short Term Exposure Limit)
Ceiling - Maximum limit value
TSCA - United States Toxic Substances Control Act Section 8(b) Inventory

CENTRE TESTING INTERNATIONAL CORPORATION
Build C,Hongwei Industrial Zone,Baoan 70 District,Shenzhen China
www.cti-cert.com E-mail:info@cti-cert.com
Hotline 400-6788-333

DSL/NDSL - Canadian Domestic Substances List/Non-Domestic Substances List
EINECS/ELINCS - European Inventory of Existing Chemical Substances/European List of Notified Chemical Substances
ENCS - Japan Existing and New Chemical Substances
IECSC - China Inventory of Existing Chemical Substances
KECL - Korean Existing and Evaluated Chemical Substances
PICCS - Philippines Inventory of Chemicals and Chemical Substances
AICS - Australian Inventory of Chemical Substances

Disclaimer

The information provided in this Material Safety Data Sheet is correct to the best of our knowledge, information and belief at the date of its publication. The information given is designed only as a guidance for safe handling, use, processing, storage, transportation, disposal and release and is not to be considered a warranty or quality specification. The information relates only to the specific material designated and may not be valid for such material used in combination with any other materials or in any process, unless specified in the text.

-------- End of Safety Data Sheet --------

CENTRE TESTING INTERNATIONAL CORPORATION
Build C,Hongwei Industrial Zone,Baoan 70 District,Shenzhen China
www.cti-cert.com E-mail:info@cti-cert.com
Hotline 400-6788-333

Frequently Asked Questions (FAQ)