Larson Electronics LLC
9419 E US HWY 175, Kemp, TX 75143
Phone: 800.369.6671

www.LarsonElectronics.com
Email: sales@LarsonElectronics.com
Fax: 903.765.7664

MPD-CS2-CS.50AF-SZ0-Z-1.C04-3.L05-4.L04-M1

Portable Spider Box - 120/240V 1-phase - CS6375 Inlet, (1) FT, (7) Receptacles - Steel/Safety Yellow

Product ID: 287371



Image: MPD-CS2-CS.50AF-SZ0-Z-1.C04-3.L05-4.L04-M1

Larson Electronics LLC manufactures a wide variety of products, including custom built to spec designs. The pictures displayed for this unit are a general representation of form factor for the product line and may not accurately represent this exact configuration in every detail due to custom builds and changes between similar products in our standard catalog. The specifics for this configuration are listed in the specification table and supporting documentation (CAD files, Dimensional Drawing, Name Plate Diagram, Wiring Diagram, etc.). This means that specific details (receptacles, plugs, wires, connections, mounting brackets, external finishes, etc.) may not be accurately represented in images vs specifications. Please review specifications and do not order based solely on images.

This unit is Made In USA - Manufactured in Texas

MPD-CS2-CS.50AF-SZ0-ZZ-1.C04-3.L05-4.L04-M1 Spider Box
Line In: CS6375 California Standard Twist-Lock Male Inlet [125/250V]
Line Out: CS6369 California Standard Twist-Lock Female Feed-thru Outlet [125/250V]
Primary Voltage: 120/240V AC
Primary Phase: 1-Phase
Primary Frequency: 60 Hz
Output: -
Primary Panel: 120/240 1PH 50A MLO Yellow Spider Box N3R
Primary Breakers: (3) 30A 1P MCB [125V]; (4) 20A 1P MCB [125V]
Primary Outlets: (3) L5-30R NEMA Twist-Lock [125V]; (4) L5-20R NEMA Twist-Lock [125V]
Primary Protection: MCB Circuit Breakers; Weather-proof Covers
Housing Material: Steel
Form Factor: Yellow Powder Coated Spider Box w/ Legs
Mounting: Portable/Base Stand
Dimensions: -
Weight: -

Ratings/Approvals
Max Primary OCP: 50A @ 240V
Min Primary OCP: 50A @ 240V
NRTL Certified to UL 1640
NEMA 3R Weatherproof
Overload Protection
Short Circuit Protection

Special Orders - Special Requirements
Contact us for special requirements
Toll Free: 1-800-369-6671
Intl: 1-903-270-1187
Fax: 1-903-765-7664
E-mail: sales@larsonelectronics.com

This unit is Made In USA - Manufactured in Texas

The MPD-CS2-CS.50AF-SZ0-ZZ-1.C04-3.L05-4.L04-M1 from Larson Electronics is a

Portable Spider Box for indoor, outdoor, and rugged applications. This unit allows operators to use single-phase 120/240V power via a 50-amp CS6375 twist-lock male inlet. The device is equipped with one feed-thru outlet and seven output receptacles for equipment. For robust protection, the safety yellow spider box is NEMA 3R rated and protected by impact/flame resistant weatherproof covers.

This portable spider box has a 50-amp CS6375 125/250V California Standard twist-lock male inlet for bringing single-phase 120/240V power into the unit. The device supports one 50-amp CS6369 125/250V California Standard twist-lock feed-thru outlet. Operators may access three 30-amp 1-pole 125V miniature circuit breakers protecting three 30-amp L5-30R 125V NEMA twist-lock receptacles and four 20-amp 1-pole 125V miniature circuit breaker protecting four 20-amp L5-20R 125V NEMA twist-lock receptacles on the system. Primary protection consists of miniature circuit breakers and weatherproof covers.

The MPD-CS2-CS.50AF-SZ0-ZZ-1.C04-3.L05-4.L04-M1 spider box features short circuit, overload, open neutral, and reverse phasing protection. Should circuit overload occur, the unit will automatically shut down to protect the spider box from damage.

The housing on the MPD-CS2-CS.50AF-SZ0-ZZ-1.C04-3.L05-4.L04-M1 is constructed of steel with a NEMA 3R enclosure rating. This safety yellow device is approved for wet locations and features heavy-duty impact/flame resistant weatherproof covers. Two angled black legs at the base of the unit and low center of gravity ensures this spider box does not tip over in the field.

Certification: All units are built in accordance to NFPA 70 (National Electric Code). All equipment is NEMA 3R rated for indoor and outdoor use and provide a degree of protection against dirt, water, and ice. NEMA 4 and NEMA 4x equipment can be equipped upon request.

Applications: Indoor or outdoor applications including but not limited to, construction sites, plant maintenance, plant turnarounds, shows, exhibits and shipyard operations. These units are popularly used in applications where external power sources are often necessary. We also offer class rated transformers for use within explosion proof and hazardous location environments.

Larson Electronics is a manufacturer and we can build portable power distribution systems to your specifications. Although we carry several models of portable power distribution systems in stock, we can deliver custom ordered units almost as quickly as our prebuilt units. If this model does not meet your needs, please contact us at 1-800-369-6671 or sales@larsonelectronics.com to discuss your specific requirements.

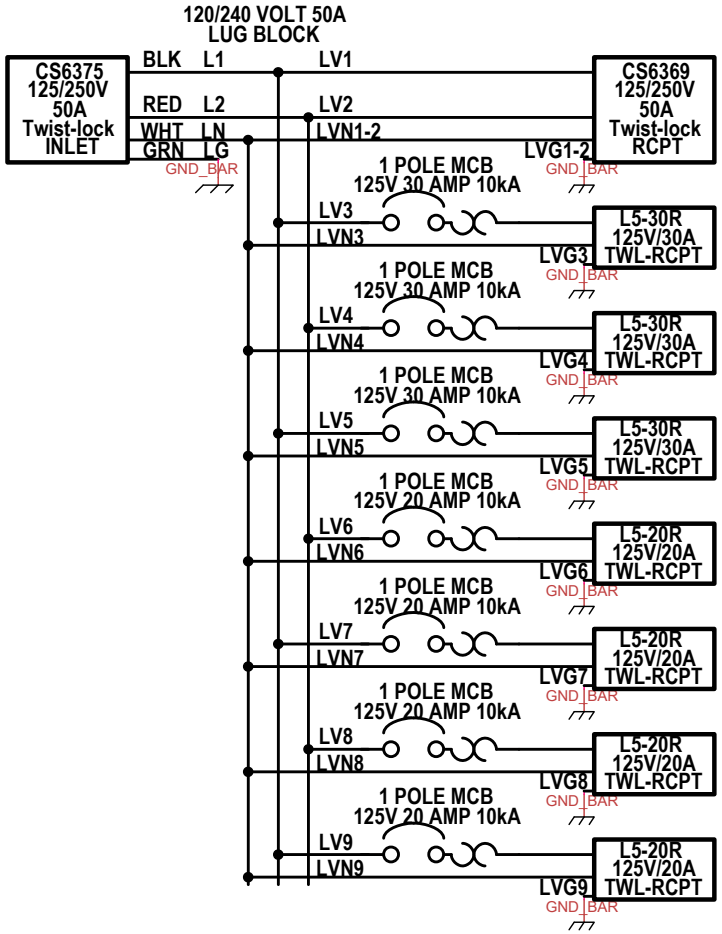

WIRE LEGEND

ID	TYPE	DESCRIPTION	WIRE SIZE
L1	CABLE	600V THHN BLACK	#8 AWG cu
L2	CABLE	600V THHN RED	#8 AWG cu
LG	CABLE	600V THHN GREEN	#10 AWG cu
LN	CABLE	600V THHN WHITE	#8 AWG cu
LV1	CABLE	600V THHN BLACK	#8 AWG cu
LV2	CABLE	600V THHN RED	#8 AWG cu
LV3	CABLE	600V THHN BLACK	#10 AWG cu
LV4	CABLE	600V THHN RED	#10 AWG cu
LV5	CABLE	600V THHN BLACK	#10 AWG cu
LV6	CABLE	600V THHN RED	#12 AWG cu
LV7	CABLE	600V THHN BLACK	#12 AWG cu
LV8	CABLE	600V THHN RED	#12 AWG cu
LV9	CABLE	600V THHN BLACK	#12 AWG cu
LVG1-2	CABLE	600V THHN GREEN	#10 AWG cu
LVG3	CABLE	600V THHN GREEN	#10 AWG cu
LVG4	CABLE	600V THHN GREEN	#10 AWG cu
LVG5	CABLE	600V THHN GREEN	#10 AWG cu
LVG6	CABLE	600V THHN GREEN	#12 AWG cu
LVG7	CABLE	600V THHN GREEN	#12 AWG cu
LVG8	CABLE	600V THHN GREEN	#12 AWG cu
LVG9	CABLE	600V THHN GREEN	#12 AWG cu
LVN1-2	CABLE	600V THHN WHITE	#8 AWG cu
LVN3	CABLE	600V THHN WHITE	#10 AWG cu
LVN4	CABLE	600V THHN WHITE	#10 AWG cu
LVN5	CABLE	600V THHN WHITE	#10 AWG cu
LVN6	CABLE	600V THHN WHITE	#12 AWG cu
LVN7	CABLE	600V THHN WHITE	#12 AWG cu
LVN8	CABLE	600V THHN WHITE	#12 AWG cu
LVN9	CABLE	600V THHN WHITE	#12 AWG cu

Title: MPD-CS2-CS.50AF-SZ0-ZZ-1.C04-3.L05-4.L04-M1		
Author: David Downs		
File: / 50A 1PH MLO 1xCS6369 3xL5-30R 4x L5-20R I		Document
Revision: 1.0	Date: 11/11/2022	Sheets: 1 of 1

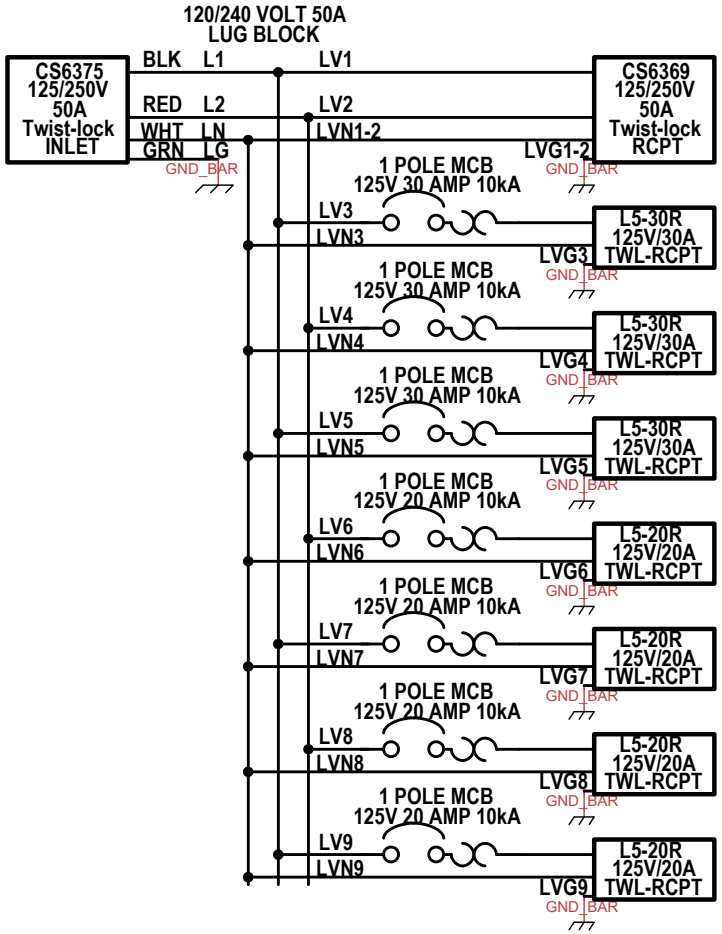

WIRE LEGEND

ID	TYPE	DESCRIPTION	WIRE SIZE
L1	CABLE	600V THHN BLACK	#8 AWG cu
L2	CABLE	600V THHN RED	#8 AWG cu
LG	CABLE	600V THHN GREEN	#10 AWG cu
LN	CABLE	600V THHN WHITE	#8 AWG cu
LV1	CABLE	600V THHN BLACK	#8 AWG cu
LV2	CABLE	600V THHN RED	#8 AWG cu
LV3	CABLE	600V THHN BLACK	#10 AWG cu
LV4	CABLE	600V THHN RED	#10 AWG cu
LV5	CABLE	600V THHN BLACK	#10 AWG cu
LV6	CABLE	600V THHN RED	#12 AWG cu
LV7	CABLE	600V THHN BLACK	#12 AWG cu
LV8	CABLE	600V THHN RED	#12 AWG cu
LV9	CABLE	600V THHN BLACK	#12 AWG cu
LVG1-2	CABLE	600V THHN GREEN	#10 AWG cu
LVG3	CABLE	600V THHN GREEN	#10 AWG cu
LVG4	CABLE	600V THHN GREEN	#10 AWG cu
LVG5	CABLE	600V THHN GREEN	#10 AWG cu
LVG6	CABLE	600V THHN GREEN	#12 AWG cu
LVG7	CABLE	600V THHN GREEN	#12 AWG cu
LVG8	CABLE	600V THHN GREEN	#12 AWG cu
LVG9	CABLE	600V THHN GREEN	#12 AWG cu
LVN1-2	CABLE	600V THHN WHITE	#8 AWG cu
LVN3	CABLE	600V THHN WHITE	#10 AWG cu
LVN4	CABLE	600V THHN WHITE	#10 AWG cu
LVN5	CABLE	600V THHN WHITE	#10 AWG cu
LVN6	CABLE	600V THHN WHITE	#12 AWG cu
LVN7	CABLE	600V THHN WHITE	#12 AWG cu
LVN8	CABLE	600V THHN WHITE	#12 AWG cu
LVN9	CABLE	600V THHN WHITE	#12 AWG cu

Title: MPD-CS2-CS.50AF-SZ0-ZZ-1.C04-3.L05-4.L04-M1		
Author: David Downs		
File: / 50A 1PH MLO 1xCS6369 3xL5-30R 4x L5-20R I		Document
Revision: 1.0	Date: 11/11/2022	Sheets: 1 of 1

Larson Electronics LLC
9419 E US HWY 175, Kemp, TX 75143
Phone: 800.369.6671

www.LarsonElectronics.com
Email: sales@LarsonElectronics.com
Fax: 903.765.7664



Larson Electronics LLC
9419 E US HWY 175, Kemp, TX 75143
Phone: 800.369.6671

www.LarsonElectronics.com
Email: sales@LarsonElectronics.com
Fax: 903.765.7664



Larson Electronics LLC
9419 E US HWY 175, Kemp, TX 75143
Phone: 800.369.6671

www.LarsonElectronics.com
Email: sales@LarsonElectronics.com
Fax: 903.765.7664



Larson Electronics LLC
9419 E US HWY 175, Kemp, TX 75143
Phone: 800.369.6671

www.LarsonElectronics.com
Email: sales@LarsonElectronics.com
Fax: 903.765.7664



Larson Electronics LLC
9419 E US HWY 175, Kemp, TX 75143
Phone: 800.369.6671

www.LarsonElectronics.com
Email: sales@LarsonElectronics.com
Fax: 903.765.7664

Frequently Asked Questions (FAQ)

There are no Faqs