Larson Electronics LLC
9419 E US HWY 175, Kemp, TX 75143
Phone: 800.369.6671

www.LarsonElectronics.com
Email: sales@LarsonElectronics.com
Fax: 903.498.3364

MT-PML-R7-1P-GNN-167KVA-SZ-LT-DF-A6-BB-CZ-2B4-M1

167 KVA Pad Mount Transformer - 22860Y/13200 Grounded Wye Primary, 240/120V Secondary - Biodegradable Fluid /KNAN

Product ID: 285908

Larson Electronics LLC manufactures a wide variety of products, including custom built to spec designs. The pictures displayed for this unit are a general representation of form factor for the product line and may not accurately represent this exact configuration in every detail due to custom builds and changes between similar products in our standard catalog. The specifics for this configuration are listed in the specification table and supporting documentation (CAD files, Dimensional Drawing, Name Plate Diagram, Wiring Diagram, etc.). This means that specific details (receptacles, plugs, wires, connections, mounting brackets, external finishes, etc.) may not be accurately represented in images vs specifications. Please review specifications and do not order based solely on images.

MT-PML-R7-1P-GNN-167KVA-SZ-LT-DF-A6-BB-CZ-2B4-M1 1-Wire 1PH Pad Mount Transformer

Transformer Type: Pad Mounted, Compartmental-Type
Transformer Configuration: Liquid Filled Pad Mounted
Transformer Feed Type: Loop Feed
Phase: Single Phase
Capacity: 167
Vector Group: II6
Primary Voltage: 22860GrdY/13200
Primary Voltage Class: 25 kV Class
Primary Phasor: Grounded Wye
Primary BIL: 125 KV
Secondary Voltage: 240/120V (L-N-L)
Secondary Phasor: Dual Winding Single Phase
Secondary BIL: 30 KV
Frequency: 60 Hz

Temperature Rise: 65°C

Cooling Class: KNAN; Self-Cooled
Forced Air (Fans): None
Tap Changer: N/A
Tap Qty: N/A
Tap %: N/A
Tap Changer Switch Location: Front Compartment
Impedance: 1.0-4.5% Typical
Primary Connection Type: Dead Front
Primary Termination: Well Bushings, 200A
Primary Connection Qty: (2)
Primary Parking Stand Qty: (2) Welded Brackets for Installing Accessory Parking Stand

Ratings

Meets/Exceeds DOE 2016 Efficiency Ratings
Complies with ANSI / IEEE #C57.12.00
Complies with ANSI / IEEE #C57.12.25
Complies with ANSI / IEEE C57 12.28
Complies with ANSI / IEEE C57 12.38
Complies with ANSI / IEEE C57.12.70
Complies with ASTM D3487
Pentahead Entry Assembly
High-Fire Point Natural Ester Insulating Fluid
Non-PCB Insulating Fluid
Tamper Proof Housing
Lift Up Pad lockable Lid

Efficiency: 99.10%
Based on transformer operating at 50% of nameplate base kVA.

Load Losses Based on 85°C Reference Temp.
No Load Loss (in watts)*: +/- 455W
Load Loss (in watts)*: +/- 1,833W
Total Load Loss (in watts)*: +/- 2,288W

Note: Losses offered are typical only, not guaranteed

Bushings
Primary Surge Arrestors: High Voltage Elbow Surge Arrestors, Included
Primary Surge Arrestor Voltage Rating: 30 kV Class
Primary Over Current Protection (OCP): Bayonet Fuses, Partial-Range Current-Limiting Fuses
Primary Over Current Protection Method: Fused
Primary Over Current Protection Holder: Bayonet Fuse Holder w/ Drip Shield
Primary Grounding Provisions: (1) Grounding lug, accepts #2 copper
Secondary Connection Type: Live Font
Secondary Connections: Threaded Stud Terminals
Secondary Over Current Protection (OCP): N/A
Secondary Connection Qty: (3)
Secondary Grounding Provisions: (1) Grounding lug, accepts #2 copper
Metering Current Transformer (CT): N/A
Metering Panel: N/A
Auxilary Control Panel : N/A
Load Break Switch: (2) 2-Position Load Break Switches: (1) Transformer, (1) Loop Feed
Load Break Switch Qty: (1)
Load Break Switch Location: High Voltage (HV) Front Compartment
Efficiency Standard(s): Meets DOE 2016 Standards, Meets ANSI/IEEE Standards
K-Factor Rating (Harmonic Mitigation): K-1 (Standard)
Pulse Drive Rating: N/A
Insulation Fluid: Biodegradable Natural Vegetable Oil Ester Insulating Fluid - Non-PCB Fluid
Fluid Capacity*: 125 Gallons
Liquid Level Indicator: Analog Dial Gauge
Temperature Indicator: Analog Dial Gauge
Pressure/Vacuum Indicator: Analog Dial Gauge
Pressure Relief Device: Included, Automatic Action
Fill Valve: Removable Bolt
Fill Valve Location: Front Compartment
Drain Valve: Included, w/ Sampler
Drain Valve Location: Front Compartment
Winding Material: Copper
Ambient Temperature Rating: 40°C
Sound Level: 55 dBA
Elevation (Altitude): 3300ft (1000 meters) Above Sea Level
Core Material: Grain Oriented Steel
Tank Material: Coated Steel
Cabinet Material: Coated Steel
Base Platform Material: Coated Steel
Housing Type: Tamper Resistant w/ Pad-lockable Lift-up Lid
Paint Type: Weatherproof and UV Resistant Epoxy Coating and Undercoating
Finish Color: Munsell™ 7.0 GY 3.29/1.5 Bell Green
Mounting: Pad Mount
Conduit Opening: Bottom Feed Underground Entry/Exit
Dimensions*: 36''-W x 47''-D x 47''-H
Weight*: 1,950 lb
*Please note that numbers are approximate and subject to change

Special Orders - Special Requirements
Contact us for special requirements
Toll Free: 1-800-369-6671
Intl: 1-903-270-1187
Fax: 1-903-498-3364
E-mail: sales@larsonelectronics.com

The MT-PML-R7-1P-GNN-167KVA-SZ-LT-DF-A6-BB-CZ-2B4-M1 Industrial Pad Mount Transformer from Larson Electronics offers powerful, reliable and efficient power distribution in indoor, outdoor and public locations. The low operating costs, low heat emissions and low cost of ownership makes this transformer ideal for a wide range of applications and businesses. An enclosed design caters to installations on concrete pads without protective fencing.
PLEASE NOTE: ANY FREE SHIPPING OFFERS DO NOT APPLY TO POWER DISTRIBUTION PANELS, TRANSFORMERS, OR SUBSTATIONS*
Transformer Features: With a transformer rating of 167 kVA, the industrial transformer features a primary voltage of single-phase 22860Y/13200 Grounded Wye and a secondary voltage of single-phase 240/120V (L-N-L). The unit has a primary loop feed and dead-front primary connections. We also offer systems with radial feed and dead front primary/live front secondary connections. This transformer features a 5-position tap changer with (2) +/- 2.5% taps above and (2) +/- 2.5% taps below to allow small changes for voltage. This pad mount transformer features primary well bushings and standard spade connectors on the

secondary side. Equipped with copper windings, this transformer consists of one coil and two core loops.
The MT-PML-R7-1P-GNN-167KVA-SZ-LT-DF-A6-BB-CZ-2B4-M1 is air cooled and does not have fans or mounting provision for fans. This unit features a 60°C temperature rise for reduced heat waste, increased reliability and longer life. The transformer meets DOE 2016 efficiency standards. The combination of low temperature rise and high efficiency makes this unit suitable for use in electrical rooms, air conditioned spaces in buildings, underground vaults and similar locations, in addition to outdoor areas.
Insulation Fluid: The MT-PML-R7-1P-GNN-167KVA-SZ-LT-DF-A6-BB-CZ-2B4-M1 features biodegradable cooling fluid (KNAN) that is comparable to FR3 fluid. We offer transformers with mineral oil fluid, if needed.
Biodegradable Fluid: Biodegradable cooling fluid (vegetable oil) has a higher heat capacity compared to mineral oil, making the liquid safer to use and more reliable during operations. Vegetable oil has a higher flash point and fire point than mineral oil, hydrocarbon oil, silicone oil and synthetic ester. This cooling fluid is also non-toxic and can tolerate higher breakdown voltages than mineral oil. When operating at high temperatures, biodegradable cooling liquid sustains up to 120% loan conditions, which helps preserve the transformer's lifespan and performance.
Gauges: The following gauges are included with the system: liquid level, temperature and pressure/vacuum gauges. Standard liquid level, temperature and pressure/vacuum gauges are analog, manual reading types. These gauges do not have auxiliary contacts.
Fault Pressure Devices: This transformer features an automatic action fault pressure device. Fault pressure devices are used to detect high rates of pressure rise within the tank.
Rapid Rise Relay: There are no rapid rise relays on the unit. This safety component is designed for protection when a rapid increase in tank pressure occurs. The relay is suitable for detecting sudden pressure fluctuations above predetermined safe limits.
Surge arresters: This system comes with high elbow surge arresters on the primary side. Designed for over-voltage and transient voltage protection, the components prevent damage caused by lightning, internal switching or voltage surges. We can offer models without high elbow surge arresters that have mounting provisions for customer-provided surge arresters.
Load Breaker Switch: The MT-PML-R7-1P-GNN-167KVA-SZ-LT-DF-A6-BB-CZ-2B4-M1 is equipped with a load break switch. This switch has four positions: A side on + transformer on, B side on + transformer on, A and B sides + transformer on, and A and B sides + transformer off.
Valves: The MT-PML-R7-1P-GNN-167KVA-SZ-LT-DF-A6-BB-CZ-2B4-M1 is equipped with a fill valve and drain valve with sampler port.
Protection Fuses: This transformer contains bayonet protection fuses on the primary side. For units without protection fuses, up stream protection is provided. We recommend provisions for protection fuses when possible, as blown fuses may require more frequent oil changes.
Mount: The heavy-duty enclosure makes the unit suitable for both indoor and outdoor applications. This power distribution system can be pad mounted on concrete pads.
Benefits: The MT-PML-R7-1P-GNN-167KVA-SZ-LT-DF-A6-BB-CZ-2B4-M1 pad mount transformer offers many benefits to consumers. This transformer provides owners with significant energy savings, as well as offering environmental benefits. Higher efficiency not only extends the life of the transformer, but also turns into cost savings for owners in the form of lower energy bills and decreased cost of ownership.
Applications: General purposes, industrial sites, electrical rooms, underground vaults, manufacturing facilities, steel plants, offshore, commercial, military, processing plants, electric power distribution, utilities, public locations and more. Larson Electronics is a manufacturer and as such can build stationary and portable transformer systems to your specifications. Although we carry several models of

power distribution transformer systems, we can deliver custom ordered units almost as quickly as our prebuilt units. If this model does not meet your needs, please contact us at 1-800-369-6671 or sales@larsonelectronics.com to discuss your specific requirements.

SINGLE PHASE PAD MOUNTED TRANSFORMER

MT-PML-R7-1P-GNN-167KVA-SZ-LT-DF-A6-BB-CZ-2B4-M1

Phase: 1PH	167	KVA	Serial No.	XXXX	
Impedence	XXX	%	Product ID:	285908	
BIL	125/30	KV	Vol of Oil	XXXX	Gal
HV	22860GrdY/13200		Total Mass	XXXX	LBS
LV	240/120	V	HV/LV Con.	Copper	
Freq.	60	Hz	Cooling	KNAN	
Phasor	II6		Temp. Rise:	65°C	

Tank must be solidly grounded - NON-PCB Biodegradable Ester Oil
Additive Polarity

HV	Taps	Amps
13868	1/A	12.04
13530	2/B	12.34
13200	3/C	12.65
12870	4/D	12.98
12548	5/E	13.31

LV	Amps
240	695.83
120	1391.67

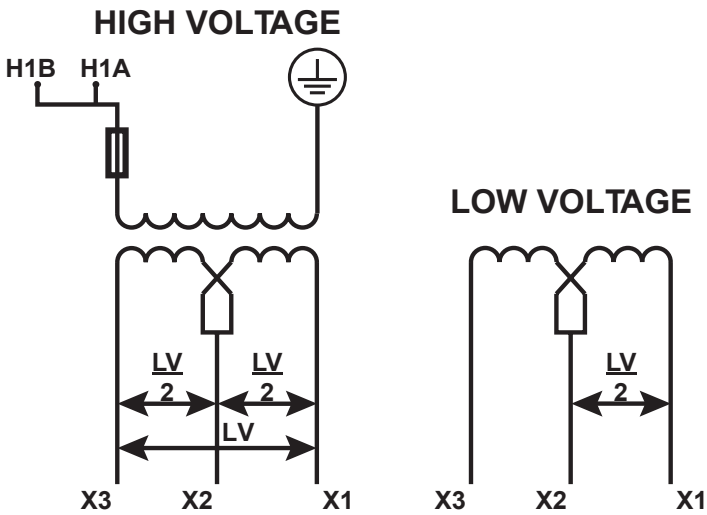

ANSI C57.12.38 - DOE 2016 Compliant - Manufactured 07/2022

LARSON MAGNETICS

Larson Magnetics LLC
Kemp, TX USA

Wiring Diagram

WARNING: *DO NOT SERVICE WHILE ENERGIZED!*

MT-PML-R7-1P-GNN-167KVA-SZ-LT-DF-A6-BB-CZ-2B4-M1

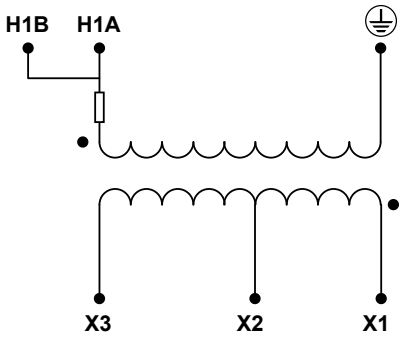

PRIMARY VOLTS	
CONNECT LINES TO H1A, H1B	
TAP	VOLTAGE
1	13868
2	13530
3	13200
4	12870
5	12548
SECONDARY VOLTS	
CONNECT LINES	VOLTAGE
X1, X3	240
X1, X2 - X2, X3	120

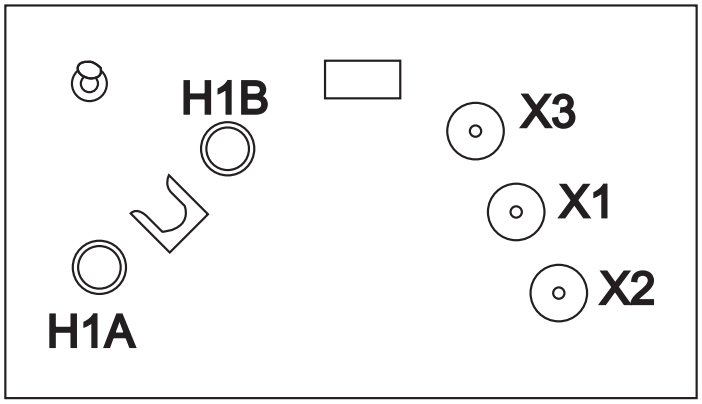

Wiring Diagram

MT-PML-R7-1P-GNN-167KVA-SZ-LT-DF-A6-BB-CZ-2B4-M1

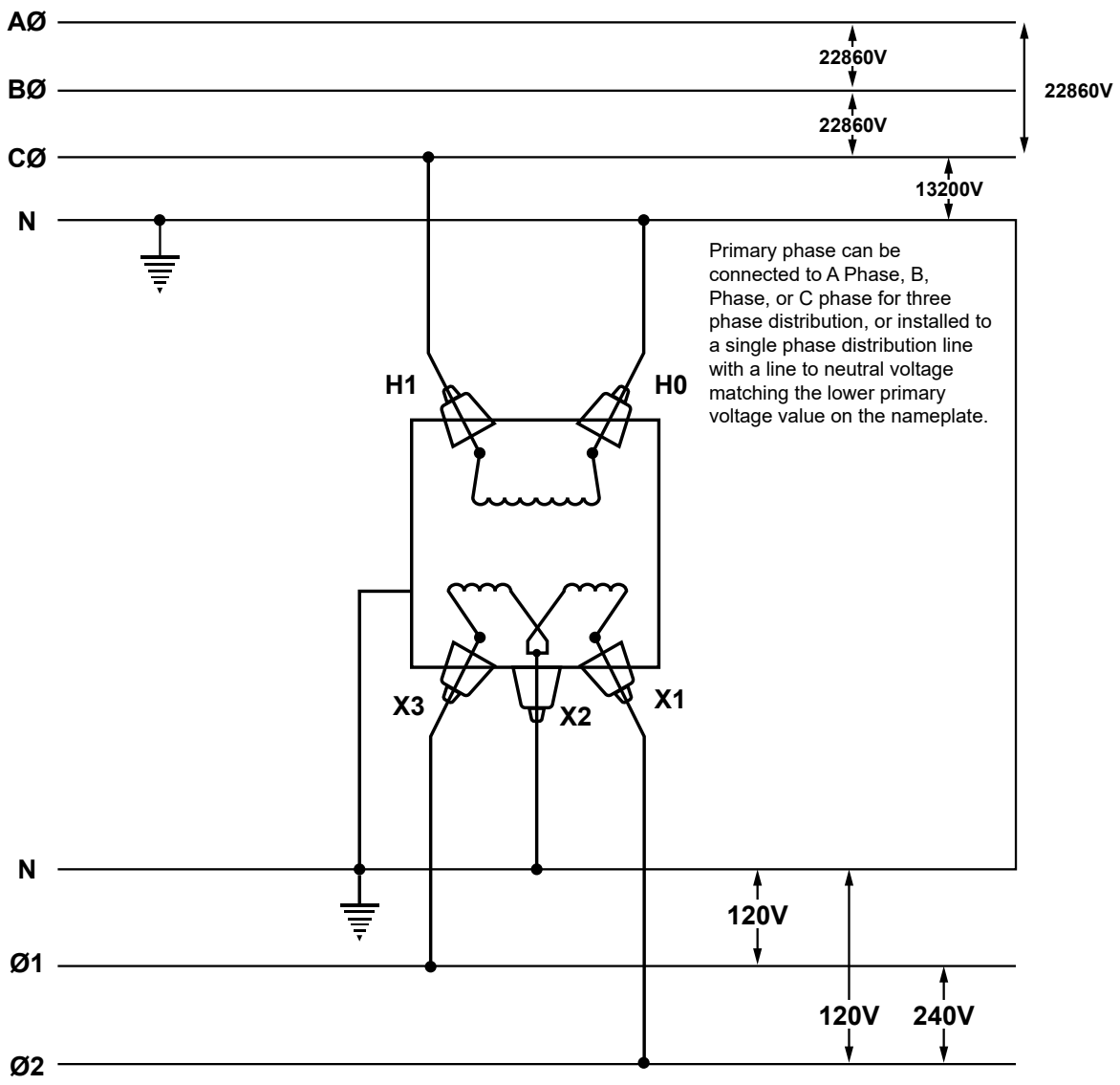

Concrete Pad Construction Details

MT-PML-RX-1P-XX-R1 Series

Single Phase Pad Mounted Transformers

Purpose and Scope

This document shows construction details for concrete pads for Single-phase, pad-mounted transformers.

General Information

1. When a pad is installed by the customer, that customer shall provide all materials. In areas of known unusually soft soil conditions, AHJ may require special treatment. Before pouring or setting the pad, the customer or contractor may be required to request an inspection by AHJ to approve the installation. AHJ shall determine the acceptability of each pad installation.

2. The installation of the pad includes the two ground rods and the interconnecting ground wire.

Application

3. If a pad-mounted transformer cannot be located away from vehicular traffic, the customer shall provide suitable barriers for the protection of the transformer. AHJ shall determine the protection requirements.

4. If the customer is to use bus duct, the secondary opening is not needed. Grout in the window of precast pads.

5. The pad sizes are based on maximum dimensions, including cooling radiators, of the various configured transformers.

Construction Notes

6. In general, all equipment pads should be installed as level as practical. Pads supporting oil-filled equipment must be leveled to within 1 inch in 8 feet in all directions.

7. In general, all equipment pads should be installed as level as practical. Pads supporting oil-filled equipment must be leveled to within 1 inch in 8 feet in all directions.

8. An equipment pad SHALL NOT be placed on an elevated berm, mound or structure either earthen or otherwise when placed in a Flood Plain. If local knowledge of the area in which the equipment is to be placed identifies a high likelihood that uninsulated terminals of the equipment will come in contact with floodwater and the location cannot be moved to a location less likely to have flood levels come in contact with the exposed terminals, a Subsurface Fully Insulated Device should be installed in lieu of the pad mount design. In some cases such as transformers, because of capacity limits of subsurface material coded equipment it may not be possible to provide a transformer of sufficient capacity to seNe loads in excess of the capabilities of a 1000 kVA UCO.

9. The transformer pad shall be placed on firm, compacted native material or on engineered fill which has been compacted at least to the requirements this document

10. The area under the pad shall be excavated to the required grade, or to a depth necessary to reach firm, undisturbed material, whichever is deeper. The material can be considered firm if it cannot be penetrated by thumb except with moderate effort.

11. If firm material has not been reached within a depth of 3 feet, excavate 3 feet beyond the perimeter of the pad and backfill the entire excavated area to the required grade and to the requirements of Note 12.

12. In case it has been necessary to excavate deeper than the required grade to reach firm material, backfill to the required grade in one of the following ways:

A. Backfill with clean, non-expansive soil compacted to 90% of maximum density. Soil shall be placed in layers not more than 8 inches thick before compaction. Maximum density and in-place density is to be determined by by ASTM D-1556 and ASTM D-1557 respectively. A copy of the test results may be required by AHJ.

B. Backfill with soil-cement slurry consisting of one sack of Portland cement per cubic yard and clean native soil or sand. When slurry is used as a backfill material, the customer will not be required to use a poured-in-place pad.

Concrete Pad Construction Details

MT-PML-RX-1P-XX-R1 Series

Single Phase Pad Mounted Transformers

13. In areas of known soft soil conditions, trenches within the pad excavation area for the installation of conduits shall be backfilled in one of the ways specified in Note 12.

14. In addition to the above, precast pads shall be placed on a 3-inch layer of slurry backfill or sand screeded level to provide uniform bearing.

15. Conduit windows shall be grouted with non-shrink grout (asphalt or blacktop is not approved for grouting).

16. Concrete shall be designed to attain a strength of 2,500 pounds per square inch (psi) at 28 days. Slump for concrete placement shall not exceed 3 inches. Reinforcing steel shall be rated a minimum of per ASTM A615, Grade 40. Grade 40 rebar grade has a minimum tensile strength of 60 thousand pounds per square inch (kpsi) and a minimum yield strength of 40 thousand pounds per square inch (kpsi) under normal conditions.

17. A minimum distance of 6 feet shall be maintained between ground rods.

18. Wood-float or light broom finish the top of the slab. Finish all exposed edges with a finishing tool. Vertical edges shall have a 3/4-inch chamfer. Slope exposed horizontal surfaces slightly for drainage. Moist-cure concrete for at least 7 days after pouring. Do not install transformer until 14 days after pouring concrete. See Note 19 for exceptions to this requirement.

19. The transformer may be installed earlier than the 14 days specified above, provided the concrete has attained a compressive strength of at least 1,500 psi obtained as follows (this procedure is permitted only for urgent cases where earlier pouring of pad is not practical):

A. For a six-sack mix using normal Portland cement, the transformer may be installed after 7 days; or for a six-sack mix using high early-strength cement, the transformer may be installed after 72 hours.

B. All concrete must be moist-cured to the minimum period specified above before installing the transformer.

C. Verify the required strength by either concrete cylinder test or Schmidt hammer test.

20. Belled ends of conduits should be placed approximately 1 inch above the concrete pad surface. If belled ends are removed, install end bell fittings. Temporarily plug or cap all conduits.

21. Only AHJ-approved utility electric-service-related equipment and structures may be installed in the area beneath the transformer pad. The area 6 feet deep and 12 inches horizontally around the pad shall be free of all foreign substructures.

Construction Notes for Precast Pads

22. Concrete shall be designed to attain a strength of 2,500 psi in 28 days.

23. Inserts and securing of inserts shall be of sufficient strength to lift the pad. A minimum of three inserts with 7/8- inch diameter, UNC thread and 2-1/4 inch inside depth, steel, galvanized with temporary plugs shall be provided.

24. Inserts shall be installed flush with the surface of the pad.

25. Reinforcing bars shall be as per ASTM A615, Grade 40 minimum.

26. 24. All exposed edges shall have a 3/4-inch chamfer or radius.

27. Surface shall have a light broom or wood-float finish.

28. The surface of the pad shall be level and flat.

29. Precast pads shall be permanently identified with manufacturer's name and have the weight stenciled on top of the pad.

Concrete Pad Construction Details

MT-PML-RX-1P-XX-R1 Series

Single Phase Pad Mounted Transformers

Concrete Pad Details for Single-Phase Transformers and Cable Pulling Vault

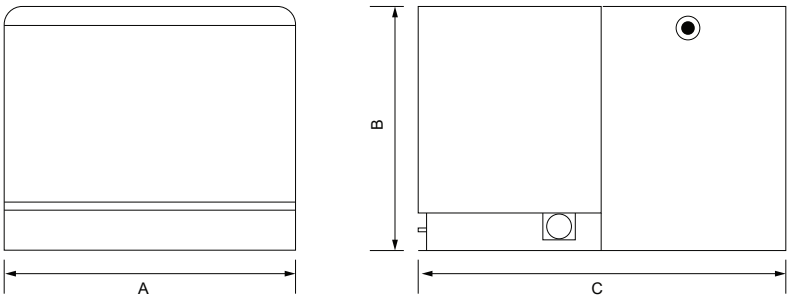

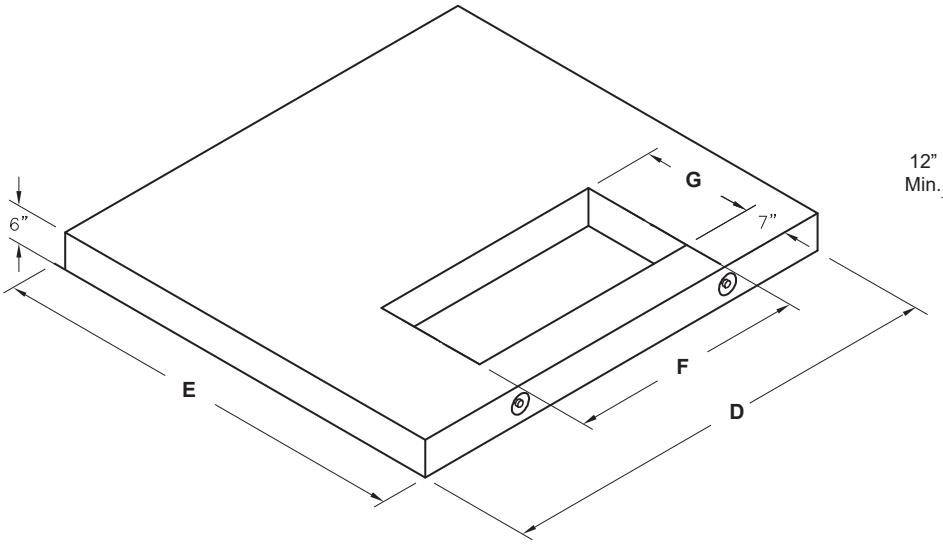

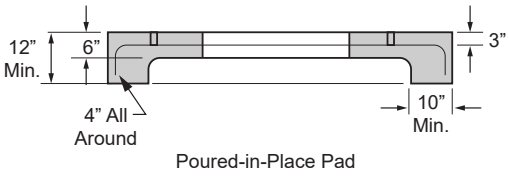

Poured-in-Place Pad

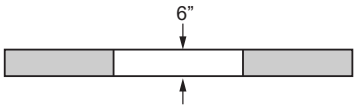

Precast Pad

15 KV / 25 KV								
KVA	Max Weight	XFMR Width	XFMR Depth	XFMR Height	Pad Width	Pad Depth	Opening Width	Opening Depth
		A	B	C	D	E	F	G
5	700 Lbs	33.86"	37.4"	25.2"	48"	60"	32"	18"
10	750 Lbs	33.86"	37.4"	25.2"	48"	60"	32"	18"
15	900 Lbs	33.86"	37.4"	25.2"	48"	60"	32"	18"
25	1,250 Lbs	33.86"	37.4"	25.2"	48"	60"	32"	18"
37.5	1,400 Lbs	33.86"	37.4"	25.2"	48"	60"	33"	18"
50	1,600 Lbs	34.25"	37.4"	25.2"	48"	60"	33"	18"
75	1,750 Lbs	37.4"	45.67"	29.53"	60"	66"	36"	18"
100	2,200 Lbs	41.34"	45.28"	29.53"	60"	66"	40"	18"
167	3,250 Lbs	55.12"	45.67"	33.07"	72"	66"	54"	18"
250	3,500 Lbs	55.12"	51.18"	33.07"	72"	72"	54"	18"
333	3,800 Lbs	55.12"	55.91"	33.46"	72"	72"	54"	18"
500	4,800 Lbs	59.06"	57.09"	36.22"	78"	78"	58"	18"
667	4,800 Lbs	59.06"	57.09"	40.94"	78"	78"	58"	18"
833	4,800 Lbs	59.06"	64.96"	40.94"	78"	84"	58"	18"

35 KV								
KVA	Max Weight	XFMR Width	XFMR Depth	XFMR Height	Pad Width	Pad Depth	Opening Width	Opening Depth
		A	B	C	D	E	F	G
5	850 Lbs	37.4"	51.93"	32.72"	54"	66"	32"	23"
10	950 Lbs	37.4"	51.93"	32.72"	54"	66"	32"	23"
15	1,250 Lbs	37.4"	51.93"	32.72"	54"	66"	32"	23"
25	1,500 Lbs	37.4"	51.93"	32.72"	54"	66"	32"	23"
37.5	1,850 Lbs	39.37"	52.36"	32.72"	54"	72"	34"	23"
50	2,000 Lbs	41.34"	53.94"	32.72"	60"	72"	36"	23"
75	2,200 Lbs	41.34"	54.33"	37.4"	60"	72"	36"	23"
100	2,400 Lbs	41.34"	55.91"	37.4"	60"	72"	36"	23"
167	2,750 Lbs	43.31"	57.09"	43.31"	60"	78"	38"	23"
250	3,300 Lbs	45.28"	58.27"	45.28"	60"	78"	40"	23"
333	4,250 Lbs	55.12"	63"	45.28"	72"	84"	49"	23"
500	5,250 Lbs	59.06"	67.72"	46.46"	78"	84"	53"	23"
667	5,250 Lbs	59.06"	67.72"	53.15"	78"	84"	53"	23"
833	5,500 Lbs	59.06"	75.59"	53.15"	78"	90"	53"	23"

Concrete Pad Construction Details

MT-PML-RX-1P-XX-R1 Series

Single Phase Pad Mounted Transformers

Box Pad Details for Single-Phase Transformers

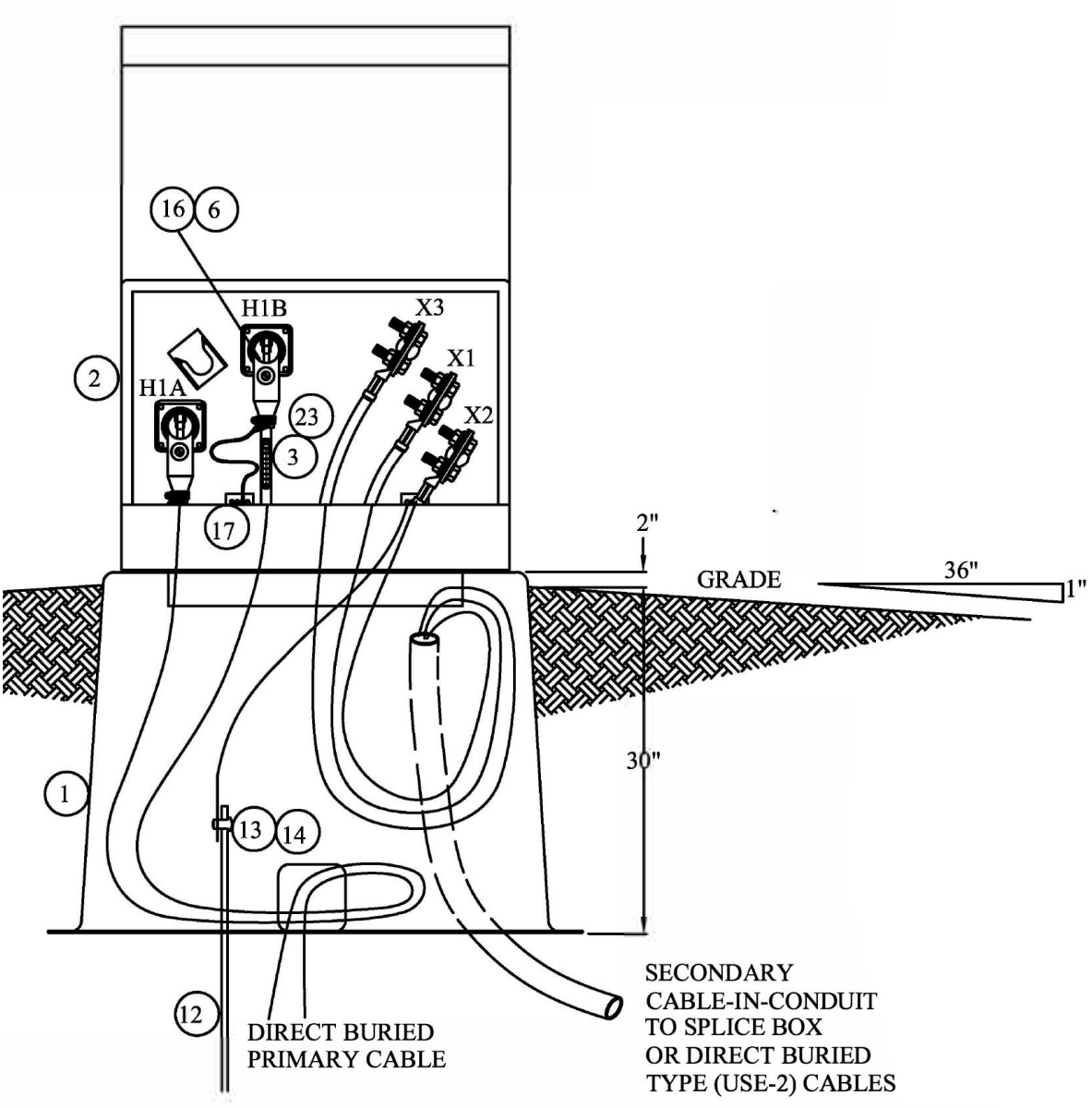

NO PCBs
LARSONELECTRONICS.COM
877-875-2747
sales@larsonelectronics.com
WARNING
HAZARDOUS VOLTAGE INSIDE.
KEEP OUT!
WARNING
NOTICE

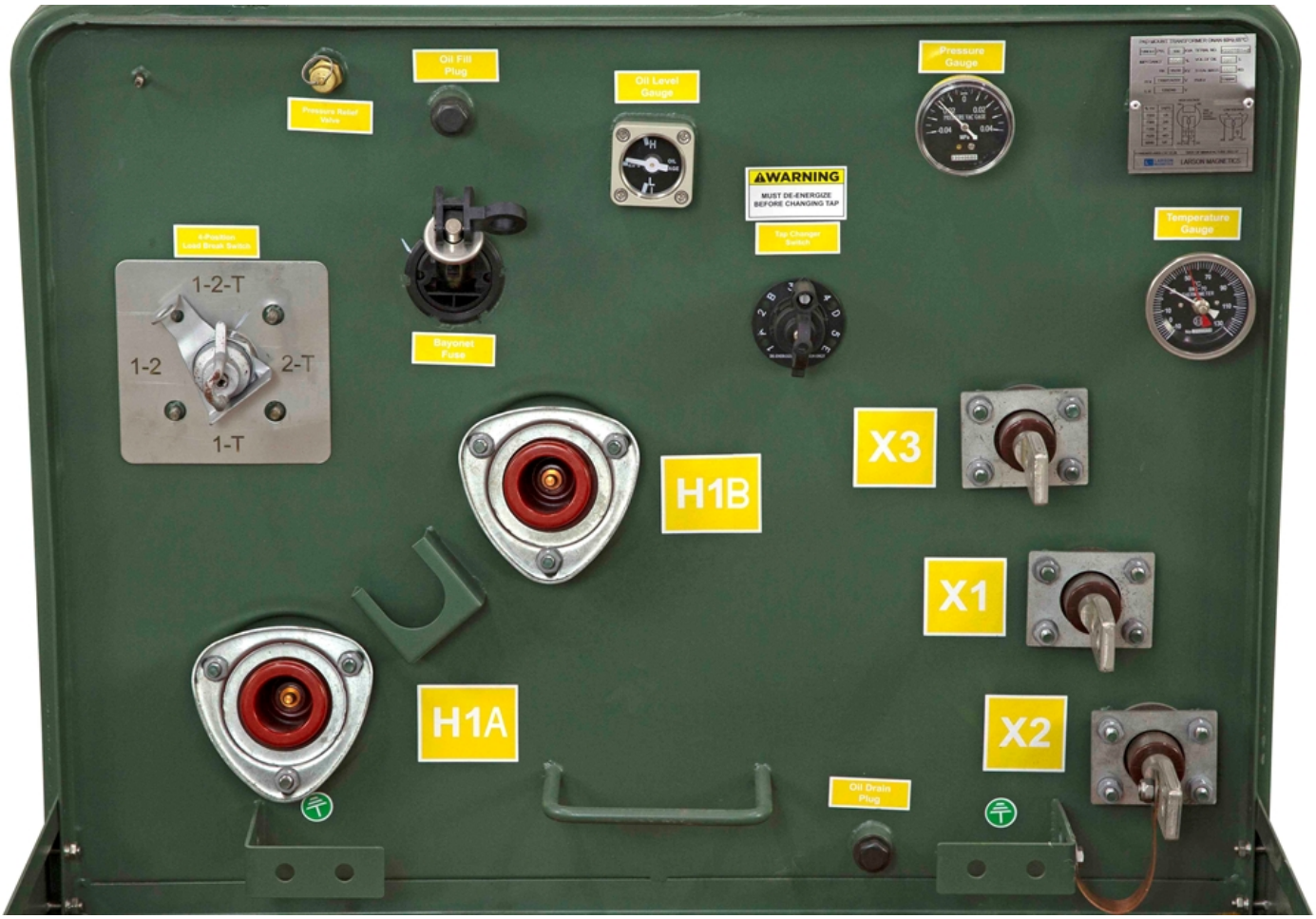
Pressure Relief Valve
Oil Fill Plug
Oil Level Gauge
Pressure Gauge
WARNING
MUST DE-ENERGIZE BEFORE CHANGING TAP
Tap Changer Switch
Temperature Gauge
4-Position Load Break Switch
1-2-T
1-2
2-T
1-T
Bayonet Fuse
H1B
X3
X1
H1A
X2
Oil Drain Plug

RAPO® VEGETABLE INSULATING OIL CHARACTERS

Environmental Character

Environmental friendly

- Based on natural plants
- Almost 100% biodegradation
- Non oral toxicity
- Non toxicity for aquatic animals
- None halogen, polycyclic aromatic hydrocarbons
- Petroleum independency

Transformer oil biodegradability comparison

- If RAPO® spillover, it can be cleaned by normal means, instead of the way to deal with toxic waste.
- RAPO® is real green insulating oil which can avoid punishment by government regulations and eliminate the cleanup process.

Less-flammable Character

Mineral oil's fire point is in the range of 147-165ºC (296.6-329ºF). The relatively lower fire point might result in transformers' fire and explosion. The fire point of RAPO® vegetable insulating oil is up to 350ºC, higher than most of fire-resistant oil and other insulating oil in use, greatly improved the safety and reliability of transformers and grid system.

Fireproof performance comparison of various types of transformer oil

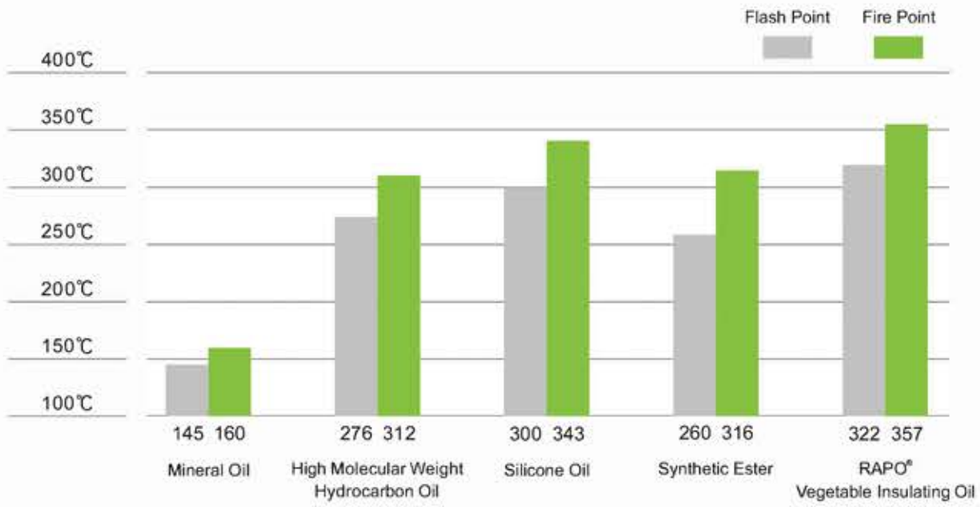

- RAPO® vegetable insulating oil can effectively save equipment maintenance, replacement and other costs, and avoid the economic losses caused by the transformer fire.
- RAPO® can be used indoors or in the compact space.
- RAPO® can help to reduce the use of fire-fighting equipment (sprinkler) and firewalls if space is limited.
- RAPO® can reduce insurance costs.

Excellent Electrical Character

RAPO® vegetable insulating oil has a higher breakdown voltage than mineral insulating oil.

	Dielectric Breakdown (kV)	Standards Request (kV)
RAPO® Vegetable Insulating Oil	72	≥35
Mineral Oil (typical)	65	≥30

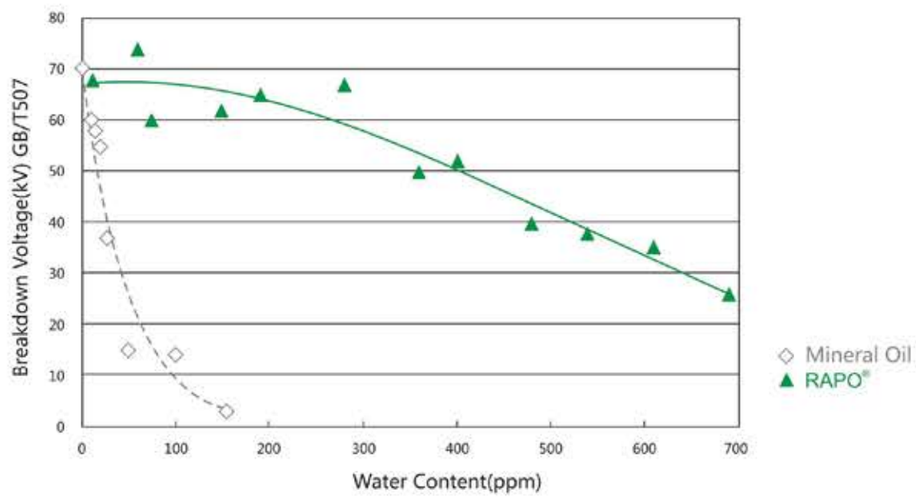

Ester chain in natural ester can make it have "polar" region, the region covered by ester chain effects like a magnetic fields which has a special attraction to water molecule and can absorb the water which exists in insulation cellulose paper material. So RAPO® has extremely high water saturation at various temperatures compared to mineral oil. Under normal operating environment, water saturation of RAPO® is 5-8 times than mineral oil.

Due to the higher water saturation of RAPO®, RAPO® vegetable insulating oil can keep the breakdown voltage to be over 60kV even if the water content exceeds over 300ppm. In contrast, the breakdown voltage decreases dramatically under 35kV when mineral oil contains a little amount of water such as 55ppm.

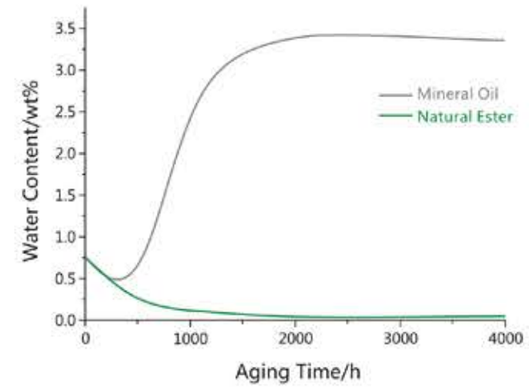

During thermal aging, RAPO® can absorb the water in insulation paper or pressboard which can accelerate the aging progress of insulation paper and pressboard. So RAPO® can prolong the insulation paper and pressboard aging process and improve the life span of the transformer.

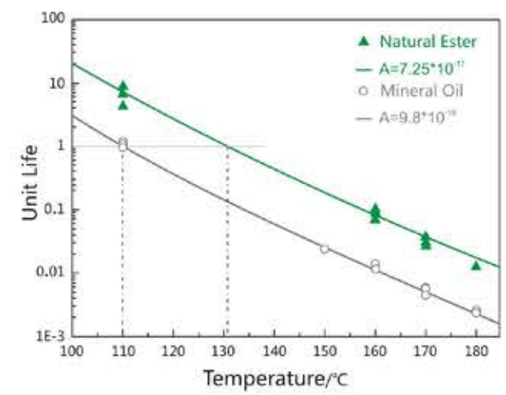

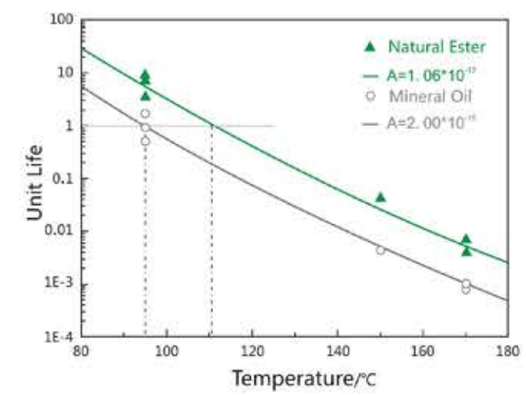

Experimental data shows that insulation paper infiltrated by RAPO® can work with a long time in the environment whose temperature is 10-15°C higher than the maximum allowable one and has same life expectancy with the insulation paper infiltrated by mineral oil, can well prevent the production of precipitates, so that can increase the overload of the transformers. Transformers using RAPO® as filled oil can work in a long term with up to 120% load conditions and without affecting transformer's life and performance.

Insulating Oil Type	Top Liquid Temperature Rise	Average Winding Temperature Rise	Hottest Spot Temperature
Mineral Oil	60℃	65℃	78℃
RAPO® Vegetable Insulating Oil	80℃	115℃	160℃

RAPO® VEGETABLE INSULATING OIL PARAMETERS

Test Items		RAPO® Insulating Oil	Test Methods	ASTM D6871
Electrical Properties				
Breakdown voltage (kV/2.5mm)		72	IEC 156	≥35
Dissipation factor (%)	25℃	0.06	ASTM D924	≤0.2
	100℃	1.37	ASTM D924	≤4
Volume resistivity (Ω•cm @25℃)		6.9×10^{13}	DL/T 421	—
Physical and Chemical Properties				
Relative density ($g\cdot cm^{-3}$ @15℃)		0.919	ASTM D1298	≤0.96
Color		L0.5	ASTM D1500	≤1.0
Total acid number (mgKOH/g)		0.024	ASTM D974	≤0.06
Viscosity(mm^2/s)	40℃	36.07	GB/T 265	≤50
	100℃	8.263	GB/T 265	≤15
Thermal Properties				
Flash point(open cup)/℃		322	GB/T 3536	≥275
Fire point/℃		357	GB/T 3536	≥300
Pour point/℃		-27	GB/T 3535	≤-10

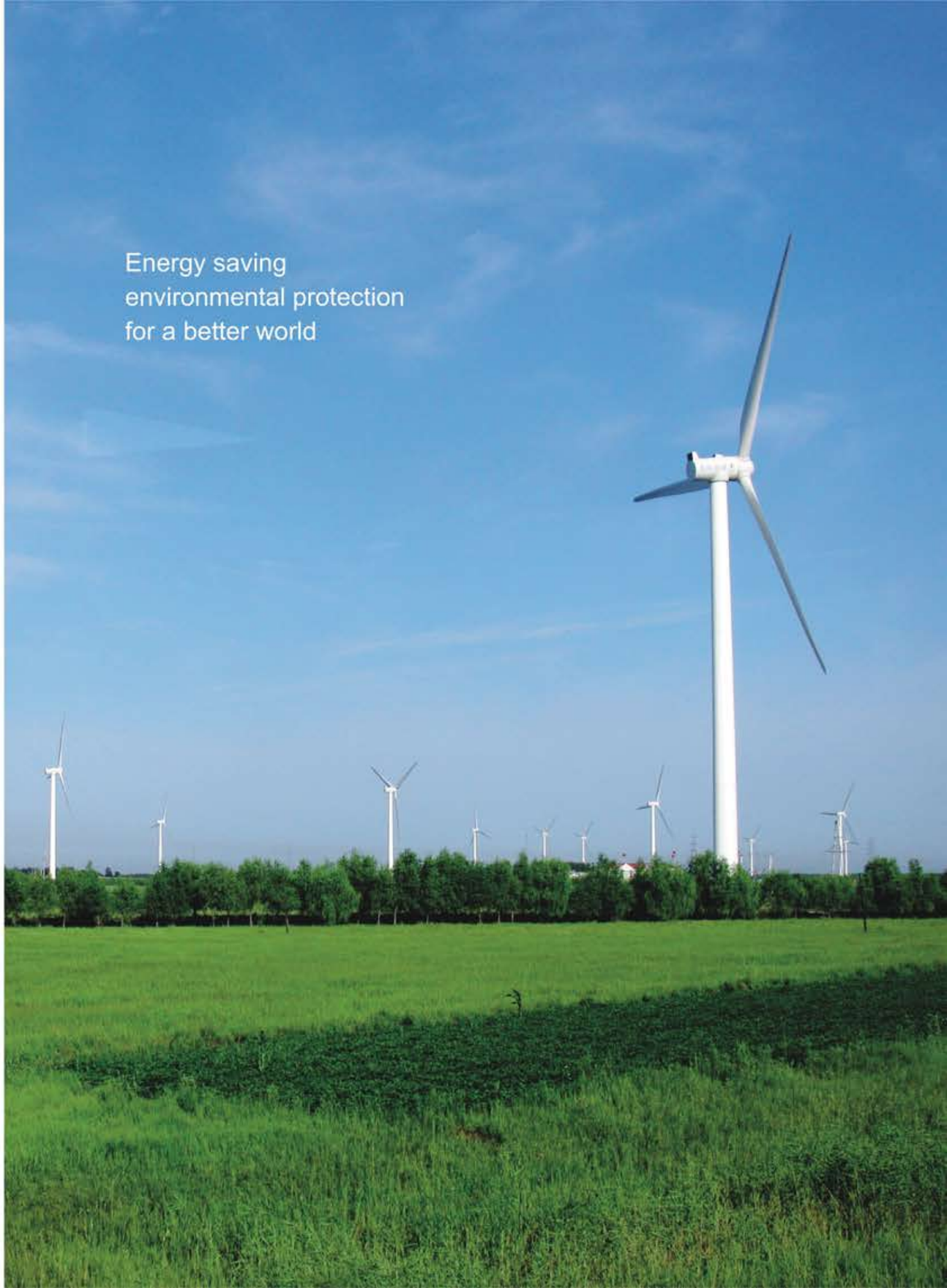

CERTIFICATE OF COMPLIANCE

Certificate Number	MH63693
Report Reference	MH63693-20200528
Issue Date	2020-JUNE-05
Issued to:	GUANG DONG JOOYN NEW MATERIAL TECHNOLOGY CO.,LTD. No.17, Guinan Industrial Park, Wuguishan Town Zhongshan, Guangdong 528458 CHINA
This certificate confirms that representative samples of	DIELECTRIC MEDIUMS Dielectric Medium, "RAPO Natural Ester".
	Have been investigated by UL in accordance with the Standard(s) indicated on this Certificate.
Standard(s) for Safety:	UL 340, Comparative Flammability of Liquids
Additional Information:	See the UL Online Certifications Directory at https://iq.ulprospector.com for additional information.

This *Certificate of Compliance* does not provide authorization to apply the UL Mark. Only the UL Follow-Up Services Procedure provides authorization to apply the UL Mark.

Only those products bearing the UL Mark should be considered as being UL Certified and covered under UL's Follow-Up Services.

Look for the UL Certification Mark on the product.

Bruce Mahrenholz, Director North American Certification Program

UL LLC

Any information and documentation involving UL Mark services are provided on behalf of UL LLC (UL) or any authorized licensee of UL. For questions, please contact a local UL Customer Service Representative at http://ul.com/aboutul/locations/

Material Safety Data Sheet

1、Identification of the Substance/Mixture and of the Company

1.1 Product Identifier

Material Name: RAPO® Natural Ester

CAS No: 68956-68-3

1.2 Relevant identified uses of the substance or mixture and uses advised against

Product Use: Dielectric coolant fluid.

Uses advised against: None.

1.3 Details of the supplier of the substance or mixture

Company: Guangdong JOOYN new Material Technology Co., Ltd.

Address: No.17 Guinan Industrial Park, Wuguishan Town, Zhongshan City

Telephone: 0760-88209990

Emergency Telephone: 0760-88206886

Email: zhuoyuan@jooyn.cn

2、Hazards Identification

This product is not classified as hazardous in accordance with Regulation (EU) No. 453/2010.

2.1 Classification of the substance or mixture

Regulation (EC) No 1272/2008 (CLP): Not classified.

Regulation 67/548/EEC or 1999/45/EC: Not belong to hazardous according to EC.

2.2 Label elements

Regulation (EC) No 1272/2008 (CLP): No symbol or signal word required.

Regulation 67/548/EEC or 1999/45/EC: No symbol or signal word required.

2.3 Other hazards

None.

3、Composition/Information on Ingredients

3.1 Substance

CAS No.: 68956-68-3.

Description: Mix natural triglycerides(Vegetable Oil). **Percent:** ＞98.5

4、First Aid Measures

4.1 Description of first aid measures

Inhalation: None envisaged due to the low vapor pressure of the substance.

Skin: Wash with soap and water. Obtain medical attention if irritation develops.

Eyes: Irrigate with copious amounts of water. Obtain medical attention if irritation develops.

Ingestion: Do not induce vomiting, obtain medical attention.

4.2 Most important symptoms and effects, both acute and delayed

No adverse effects expected.

4.3 Indication of any immediate medical attention and special treatment needed

No special treatment required.

5、Fire Fighting Measures

5.1 Extinguishing media

Carbon dioxide, dry powder, foam or water fog. Do not use water jets.

5.2 Special hazards arising from the substance or mixture

None.

5.3 Advice for fire fighters

Self-contained breathing apparatus may be required.

6、Accidental Release Measures

6.1 Personal precautions, protective equipment and emergency procedures

Spilt product constitutes a slip hazard. Avoid contact with skin and eyes.

6.2 Environmental precautions

Avoid contaminating any lakes, streams, ponds, groundwater or soil. Avoid flushing into drains. In the event of a large spillage contain product as thoroughly as possible and dispose of in accordance with local regulations.

6.3 Methods and material for containment and cleaning up

Soak up spilt material with absorbent granules for disposal.

7、Handling and Storage

7.1 Precautions for safe handling

Avoid eye and prolonged skin contact.

7.2 Conditions for safe storage

Sealed in a dry and shading environment.

7.3 Specific end use(s)

Exposure to air should be minimised. Opened containers should be properly resealed.

8、Exposure Controls/Personal Protection

8.1 Control Parameters

No relevant control parameters.

8.2 Exposure Controls

Eye washes should be available for emergency use.

Respiratory protection: Not required for normal use.

Skin protection: Wear coveralls.

Hand protection: Wash hands after use. For prolonged or repeated skin contact gloves are recommended.

Eye protection: If splashes are likely to occur wear safety glasses.

9、Physical and Chemical Properties

9.1 Information on basic physical and chemical properties

Appearance: Light yellow clear liquid.

Odour: No.

pH: Neutral.

Freezing point: -24 ℃.

Initial boiling point and boiling range: >300 ℃.

Flash point: 322 ℃ (open cup).

Flammability (solid, gas): Not available.

Upper/lower flammability or explosive limits: The maximum sample quantity 0.6% at 50℃, non-combustible and non-explosive.

Vapor pressure: Not available.

Vapor density: Not available.

Relative density: 0.92 $g.cm^{-3}$ at 20 ℃.

Water solubility: <1mg/l.

Solubility: Not applicable.

Partition coefficient: Not available.

Auto-ignition temperature: 406℃.

Decomposition temperature: Not available.

Viscosity: 33~36mm^2/s at 40 ℃.

Explosive properties: Non-explosive.

Oxidizing properties: Non-oxidizing.

9.2 Other information

Not applicable.

10 Chemical Stability and Reactivity

10.1 Reactivity

Stable under normal conditions of use.

10.2 Chemical stability

Stable under normal conditions of use.

10.3 Possibility of hazardous reactions

Hazardous polymerization does not occur.

10.4 Conditions to avoid

Temperatures >250 ℃.

10.5 Incompatible materials

Strong oxidizing agents.

10.6 Hazardous decomposition products

No data available.

11、Toxicological Information

Likely routes of exposure: Skin and eyes are the most likely routes for exposure. Accidental ingestion may occur. Inhalation is not expected to be a relevant route of exposure. The basic ingredient of this product is vegetable oil, so it is non-toxic.

Acute oral toxicity: None toxicity.

Test methods	Test object	Dosage/（mg/kg）	Lethal rate/%
OECD GUIDELINE FOR TESTING OF CHEMICALS	3 Mices	5000 (maximum dose)	0

Acute dermal toxicity: None toxicity.

Acute inhalation toxicity: Low volatility makes inhalation unlikely.

Skin corrosion/irritation: No effect.

Eye corrosion/irritation: No effect.

Respiratory or skin sensitisation: No effect.

Aspiration hazard: Not considered an aspiration hazard.

Carcinogenicity/mutagenicity: Not considered a mutagenic hazard or carcinogen.

12、Ecological Information

When used and/or disposed of as indicated no adverse environmental effects are foreseen. Ecotoxicological effects based on knowledge of similar substances.

12.1 Toxicity

The substances do not pose a hazard to aquatic organisms.

Test methods	Test object	Dosage/(mg/kg)	Lethal rate/%
OECD 203	10 carp/crucian	25 （maximum solubility）	0

12.2 Persistence and degradability

Readily biodegradable. Biodegradation degree of 20 days is 98%.

12.3 Bioaccumulative potential

No potential for bioaccumulation.

12.4 Mobility in soil

Product has low mobility in soil.

12.5 Results of PBT and vPvB assessment

The product does not meet criteria for toxicity which requires further assessment. It is not considered PBT or vPvB.

12.6 Other adverse effects

No other adverse effects envisaged.

13、Disposal Considerations

Waste treatment methods Product and packaging must be disposed of in accordance with local and national regulations. Unused product may be returned for reclamation.

14、Transport Information

Not classified as hazardous under air (ICAO/IATA), sea (IMDG), road (ADR) or rail (RID) regulations.

14.1 UN number

Not relevant.

14.2 UN proper shipping name

Not relevant.

14.3 Transport hazard class

Not relevant.

14.4 Packing group

Not relevant.

14.5 Environmental hazards

Not relevant.

14.6 Special precautions for user

Not relevant.

15、Regulatory Information

15.1 Safety, health and environmental regulations/legislation specific for the substance or mixture

The product is not regulated to Registration, Evaluation, Authorization and Restriction (REACH) of chemicals in the European Union.

15.2 Chemical safety assessment

A chemical safety assessment has been performed for this substance.

16、Other Information

Compiled according to regulation 1907/EC/2006.

16.1 Changes from last issue

Not obvious change.

Certification

Manufacturer: Larson Electronics LLC
Address: 9419 US-HWY 175
Kemp, Texas 75143

Declare the following equipment conforms to the standard(s) as listed:

Model: MT-PML & MT-UPM Series
Description: Overhead & Pad Mounted Distribution Transformers

The MT-PML & MT-UPM series complies with the below standards set forth by the listed Association's requirements. Purchased and manufactured components are evaluated to Larson Electronics LLC Quality Control Management system per ISO 9001:2015. This certification applies to all specimens manufactured in accordance to the manufacture's drawings and options configured per the specification data sheet.

Evaluated Standards:

- **ASTM A240/A240M (2020a):** Standard Specification for Chromium and Chromium-Nickel Stainless Steel Plate, Sheet, and Strip for Pressure Vessels and for General Applications
- **ASTM D117 (2018)**: Standard Guide for Sampling, Test Methods, and Specifications for Electrical Insulating Liquids
- **ASTM D1535 (2014; R2018):** Standard Practice for Specifying Color by the Munsell System
- **ASTM D3487 (2016; E2017):** Standard Specification for Mineral Insulating Oil Used in Electrical Apparatus
- **ASTM D6871 (2017):** Standard Specification for Natural (Vegetable Oil) Ester Fluids Used in Electrical Apparatus
- **ASTM D877/D877M (2019):** Standard Test Method for Dielectric Breakdown Voltage of Insulating Liquids Using Disk Electrodes
- **ASTM D92 (2012a):** Standard Test Method for Flash and Fire Points by Cleveland Open Cup Tester
- **ASTM D97 (2017b):** Standard Test Method for Pour Point of Petroleum Products
- **D4059-00 (2018):** Standard Specifications for Analysis of Polychlorinated Biphenyls in Mineral Insulating Oils By Gas Chromatography.
- **EPA 712-C-98-075 (1998):** Fate, Transport and Transformation Test Guidelines - OPPTS 835.3100- "Aerobic Aquatic Biodegradation"
- **EPA 821-R-02-012 (2002):** Methods for Measuring the Acute Toxicity of Effluents and Receiving Waters to Freshwater and Marine Organisms

- **ANSI / IEEE C2:** National Electric Safety Code
- **ANSI / IEEE C12.1 (2014; E2016)**: Electric Meters - Code for Electricity Metering
- **ANSI / IEEE C12.10 (2011):** Physical Aspects of Watthour Meters - Safety Standards
- **ANSI / IEEE C12.7 (2014):** Requirements for Watthour Meter Sockets
- **ANSI / IEEE C57.106-1991 (R1998):** Guide for Acceptance and Maintenance of Insulating Oil in Equipment.
- **ANSI / IEEE C2 (2017; E2017; INT 2017):** National Electrical Safety Code
  ANSI / IEEE C37.47 (2011): Standard for High Voltage Distribution Class Current-Limiting Type Fuses and Fuse Disconnecting Switches
- **ANSI / IEEE C57.12.00 (2015):** General Requirements for Liquid-Immersed Distribution, Power, and Regulating Transformers
- **ANSI / IEEE C57.12.20 (2017):** Overhead-Type Distribution Transformers 500 kVA and Smaller; High Voltage, 34 500 V and Below; Low Voltage, 7970/13 800Y V and Below
- **ANSI / IEEE C57.12.21 (2000):** Pad-Mounted, Compartmental-Type, Self-Cooled, Single-Phase Distribution Transformers With High-Voltage Bushings: High Voltage (34 500 GrdY/19 920 V and Below) and Low Voltage (240/120 V, 167 kVA and Smaller)
- **ANSI / IEEE C57.12.25 (1990):** Requirements for Pad-Mounted Compartmental-Type Single-Phase Distribution Transformers with Separable Insulated High-Voltage Connectors, High-Voltage, 34500 Grd. Y/19920 Volts and Below; Low Voltage, 240/120; 167 KVA and Smaller.
- **ANSI / IEEE C57.12.28 (2014):** Standard for Pad-Mounted Equipment - Enclosure Integrity
- **ANSI / IEEE C57.12.29 (2014):** Standard for Pad-Mounted Equipment - Enclosure Integrity for Coastal Environments
- **ANSI / IEEE C57.12.31 (2010):** Standard for Pole-Mounted Equipment - Enclosure Integrity
- **ANSI / IEEE C57.12.34 (2015):** Standard Requirements for Pad-Mounted, Compartmental-Type, Self-Cooled, Three-Phase Distribution Transformers, 10 MVA and Smaller; High Voltage, 34.5 kV Nominal System Voltage and Below; Low Voltage, 15 kV Nominal System Voltage and Below
- **ANSI / IEEE C57.12.35 (2013):** Standard Bar Coding for Distribution Transformers and Step-Voltage Regulators
- **ANSI / IEEE C57.12.38 (2014):** Standard for Pad-Mounted-Type, Self-Cooled, Single-Phase Distribution Transformers; High Voltage, 34 500 GrdY/19 920 V and Below, Low Voltage, 240/120 V; 167 kVA and Smaller
- **ANSI / IEEE C57.12.70 (2020):** Terminal Markings And Connections For Distribution And Power Transformers
- **ANSI / IEEE C57.12.80 (2010):** Standard Terminology for Power and Distribution Transformers
- **ANSI / IEEE C57.12.90 (2015; C2017):** Test Code for Liquid-Immersed Distribution, Power, and Regulating Transformers
- **ANSI / IEEE C57.12.110 (2018):** Recommended Practice for Establishing Liquid Immersed and Dry-Type Power and Distribution Transformer Capability when Supplying Nonsinusoidal Load Currents
- **ANSI / IEEE C57.13 (2016):** Requirements for Instrument Transformers
- **ANSI / IEEE C57.91 (2011):** Guide for Loading Mineral-Oil-Immersed Transformers
- **ANSI / IEEE C57.98 (2011):** Guide for Transformer Impulse Tests
- **ANSI / IEEE C57.106 (2015):** Guide for Acceptance and Maintenance of Insulating Oil in Equipment
- **ANSI / IEEE C57.109 (2018):** Guide for Liquid-Immersed Transformer Through-Fault-Current Duration
- **ANSI / IEEE C57.147 (2018):** Guide for Acceptance and Maintenance of Natural Ester Fluids in Transformers
- **ANSI / IEEE C57.154 (2012):** Standard for the Design, Testing, and Application of Liquid-Immersed Distribution, Power, and Regulating Transformers Using High-Temperature Insulation Systems and Operating at Elevated Temperatures
- **ANSI / IEEE C62.11 (2020):** Standard for Metal-Oxide Surge Arresters for Alternating Current Power Circuits (>1kV)

LARSON ELECTRONICS LLC • 9419 E US HWY 175 • KEMP, TX 75143
p: 1-800-369-6671 • intl: 903-498-3363 • f: 903-498-3364 • sales@larsonelectronics.com

- **ANSI / IEEE C62.22 (2009):** Guide For The Application Of Metal-Oxide Surge Arresters For Alternating-Current Systems
- **ANSI / IEEE 386 (2016):** Separable Insulated Connector Systems for Power Distribution Systems Rated 2.5 kV through 35 kV
- **CSA C2.1:06 (R2022):** Standard for Single-phase and three-phase liquid-filled distribution transformers
- **CAN / CSA C50-14 (R2018):** Mineral insulating oil, electrical, for transformers and switches
- **CSA C88:1 (R2018):** Power Transformer And Reactor Bushings
- **CSA C88:16 (R2021):** Power transformers and reactors
- **CSA C227.1:** Single Phase Pad Mounted Distribution Transformers
- **CAN / CSA C227.2:** Three-Phase, Live-Front, Pad-Mounted Distribution Transformers
- **CSA C227.3:06 (R2022):** Low-profile, single-phase, pad-mounted distribution transformers with separable insulated high-voltage connectors
- **CSA C227.4 (R2021):** Three-phase, pad-mounted distribution transformers with separable insulated high-voltage connectors
- **CSA C227.5-08 (R2018):** Three-Phase Live-Front Pad-Mounted Distribution Transformers
- **CSA C301.2:06 (R2022):** Standard for Three-phase submersible distribution transformers
- **CAN / CSA C802.1-13 (R2018):** Minimum efficiency values for liquid-filled distribution transformers
- **CSA C802.3-15 (R2020):** Minimum efficiency values for power transformers
- **NARA 10 CFR Part 431:** Energy Efficiency Program for Certain Commercial and Industrial Equipment
- **NEMA 260-1996 (R2019):** Safety Labels For Pad-Mounted Switchgear And Transformers Sited In Public Areas
- **NEMA C12.10 (2011):** Physical Aspects of Watthour Meters - Safety Standards
- **ANSI / NEMA Z535 (2011):** Safety color chart
- **ANSI / NEMA Z535.1 (2022):** Safety colors
- **ANSI / NEMA Z535.2 (2011):** Environmental and facility safety signs
- **ANSI / NEMA Z535.3 (2022):** Criteria for safety symbols
- **ANSI / NEMA Z535.4 (2011, R2017):** Product safety signs and labels
- **ANSI / NEMA Z535.5 (2022):** Safety tags and barricade tapes (for temporary hazards)
- **ANSI / NEMA Z535.6 (2011, R2017):** Product safety information in product manuals, instructions, and other collateral materials
- **NETA ATS (2021):** Standard for Acceptance Testing Specifications for Electrical Power Equipment and Systems
- **TR-1 (2013):** Transformers, Regulators and Reactors

Signed for and on behalf of: Larson Electronics, LLC
Place of issue: Kemp, TX

Signature: James Thomas

Name: James Thomas
Position: Operations Manager

Certification

Manufacturer: Larson Electronics LLC
Address: 9419 US-HWY 175
Kemp, Texas 75143

Declare the following equipment conforms to the standard(s) as listed:

Model: MT-PML, MT-UPM
Description: Liquid Filled Distribution Transformers

Evaluated Listings:

FCC: Radio Frequency Emission & Authorization Status

The MT-PML and MT-UPM Series of industrial liquid filled power distribution transformers complies with Federal Communications Commission requirements for Radio Frequency Emission & Authorization Status. This product is not capable of emitting rf energy and does not require FCC authorization. This certification applies to all specimens manufactured in accordance to the manufacture's drawings.

Signed for and on behalf of: Larson Electronics, LLC
Place of issue: Kemp, TX

Signature: James Thomas

Name: James Thomas
Position: Operations Manager

Frequently Asked Questions (FAQ)

Q. What type of transformers does Larson Electronics offer?

A. Larson Electronics offered dry type transformers and liquid filled transformers. For liquid filled transformers, Larson Electronics' offers overhead distribution transformers (utility pole mount), pad mounted distribution transformers (mounts to a concrete pad), pad mounted power transformers, underground submersible distribution transformers, and substation transformers.

Q. What are the main benefits of a liquid filled transformer?

A. Liquid filled transformers have higher energy efficiency, durability, short circuit strength, low sound level, lower maintenance costs, and longer useful life expectancy compared to dry type transformers.

Q. What types of transformer liquids does Larson Electronics use?

A. Larson Electronics offered mineral oil fluid (ONAN) and biodegradable fluid (KNAN). On request we can provide brand name FR3 fluid or other brand name fluids for additional cost and lead time. All fluids offered by Larson Electronics are non-PCB containing fluids.

Q. What is the difference between mineral oil (ONAN) and biodegradable fluid (KNAN)?

A. Mineral oil has a flash point of 147-165°C. Biodegradable insulation fluids have a higher flash point up to 350°C. Using biodegradable fluids reduce the risk of potential fire due to the transformer overheating. Utilizing biodegradable fluids extends the lifespan on the transformer due to better insulation, higher flash point, better moisture resistance, and higher maximum voltage breakdown points over mineral oils.

Q. What is the difference between FR3 fluid and biodegradable fluid?

A. Envirotemp FR3 is a brand name of biodegradable ester oils made by Cargill. Cargill is not the only manufacturer of biodegradable ester fluids used for cooling liquid filled transformers. Larson Electronics stocks RAPO biodegradable fluid that exceeds testing for ASTM D6871. Cargill Envirotemp FR3 can be used in substitution of the standard biodegradable fluid. This substitution will increase cost and lead times.

Q. Do Larson Electronics transformers contain PCB?

A. All dry-type and liquid filled transformers manufactured by Larson Electronics are PCB (polychlorinated biphenyl) free at the time of shipment. Mixtures of polychlorinated biphenyls (PCB's) were banned commercially for use as transformers cooling fluids in 1977 due to being toxic, bio-accumulative, not at all biodegradable, and difficult to dispose of safely. None of Larson Electronics transformers contain PCB and only use PCB-free fluids.

Q. What are the transformer ratings?

A. IEEE Std C57.12.20 (Overhead Type), IEEE Std C57.12.34 (Three-Phase Pad-Mounted Compartmental), IEEE Std C57.12.38 (Single-Phase Pad-Mounted), IEEE Std C57.12.36 (Distribution Substation Transformers). For more detailed list of standards, please see the ASTM Certificate 1 link.

Q. Is this transformer UL Listed? Is this transformer CSA Listed?

A. By default, no. The majority of medium voltage transformer installations do not require certification by a Nationally Recognized Testing Laboratory (NRTL) unless being installed inside a building. Medium voltage equipment is built to and complies to ANSI, ASTM, DOE, IEEE, and NETA standards. UL is one of multiple NRTLs per OSHA certification for testing

facilities for USA standards. CSA is one of multiple NRTLs per Canada certification standards. For an additional fee, we can submit your order for NRTL testing after completion of build. This testing service is per order, requires payment of testing fees, and will increase lead time.

Q. What is the lifespan of a transformer?

A. The average lifespan of a liquid filled transformer is 25 years. Many transformers will survive past the 25 year mark and are still in service for up to 35 years.

Q. What is the difference between Loop Feed and Radial Feed?

A. Radial feed Transformers will have three high voltage bushings (H1, H2, and H3). There is one bushing for each phase to allow for the incoming high voltage cables. On Wye and Grounded Wye connected Transformers, there will also be an H0 bushing. Loop feed Transformers will have six high voltage bushings (H1A, H2A, H3A, H1B, H2B, and H3B). There are two bushings for each phase. This allows the customer to connect all of their Transformers in a loop configuration. It will also allow the customer to bring two feeds to the Transformer. A four position switch can be used to switch between the A feed and the B feed.

Q. What is the difference between Dead Front and Live Front?

A. Live-front: The voltage-carrying parts are exposed. Live-front terminations have high voltage connectors, arresters, or fuses are exposed to the operator after cabinet has been opened. Dead-front: Often referred to as dead-front bushings. Safety is enhanced as there are no current-carrying parts exposed to the operator. For overhead distribution transformers and underground submersible transformers, live front is common. For pad mount transformers, the primary is typically dead front and the secondary is live front. Protection barriers can be added to live front pad mounted transformers.

Q. What is the difference between copper and aluminum windings inside the transformer?

A. Transformers wound with aluminum or copper wire have similar losses and performance. The choice of using copper or aluminum windings depends upon the application and the individual preferences. The type of winding material does not affect the transformer's reliability. A transformer's life is defined by the life of its insulation system.

Q. How many BTU's of heat does a transformer generate?

A. The heat a transformer generates is dependent upon the transformer losses. To determine air conditioning requirements multiply the sum of the full load losses (obtained from factory or test report) of all transformers in the room by 3.41 to obtain the BTUs/hour. For example: A transformer with losses of 2000 watts will generate 6820 BTUs/hour.

Q. Do you have to ground this transformer?

A. In most cases the enclosure of the transformer is grounded for safety reasons. However, a transformer will function properly without being grounded. Be sure to research all grounding requirements for your specific application against the NETA and NEC as well as any local electrical codes.

Q. What types of transformer protection are available?

A. For over-current protection, Larson Electronics offers Fuses, breakers and interrupters. For over-voltage protection, Larson Electronics offers arresters. Larson Electronics can provide both Primary and Secondary protection equipment.

Q. What is required for mounting this transformer?

A. For mounting requirements, please see the ASTM Certificate 2 link.

Q. Does my primary and secondary voltage matter for a transformer?

A. Yes, this matters greatly. For primary voltage, most transformers will be equipped with a tap changer for small primary voltage changes due to voltage drop for losses experienced in the transmission line. Some transformers will be equipped with dual voltage primaries with a voltage selector switch to choose which voltage to operate the transformer on. In both cases, these are designed to provide a steady output voltage. It is very important to confirm what voltage your primary voltage being delivered from the utility provider and what the required electrical voltage for the building or house is. You cannot only provide the KVA size, or the abbreviated primary voltage as there is not standardized voltage across the country and each region can be different. Once manufacturing has started, these cannot be changed.

Q. Where is the detailed dimensional drawing for this unit?

A. We can provide a feature drawing that shows accessories and estimated form factor. Due to the variety of options and varying voltages, an exact dimensional drawing for the specific unit you have ordered is not available until after purchase and engineering has completed the drawing for your sales order. We do not offer completed detailed engineered drawings before purchase. The feature drawings are detailed enough for concrete pad designs and preliminary engineering site designs.

Q. What is the warranty of this transformer?

A. 12 months from point of connecting electrical service to the transformer or 18 months from point of ordering, whichever comes first.

Q. Can this transformer be customized?

A. Yes, Larson Electronics allows for customization of all transformers. Please send customization requests to sales@larsonelectronics.com. If you have an engineered specification or engineered drawings, please provide those at the time of request.