Larson Electronics LLC
9419 E US HWY 175, Kemp, TX 75143
Phone: 800.369.6671

www.LarsonElectronics.com
Email: sales@LarsonElectronics.com
Fax: 903.765.7664

SPLED-EPL-LED-50W-RT-STL-C1D2-M1

50W Solar Explosion Proof LED Street Light - C1D2 Solar Panel, (1) 176aH LFP Battery, CC - 10' Cord, Pole Mount

Product ID: 285574

Image: SPLED-EPL-LED-50W-RT-STL-C1D2-M1

Larson Electronics LLC manufactures a wide variety of products, including custom built to spec designs. The pictures displayed for this unit are a general representation of form factor for the product line and may not accurately represent this exact configuration in every detail due to custom builds and changes between similar products in our standard catalog. The specifics for this configuration are listed in the specification table and supporting documentation (CAD files, Dimensional Drawing, Name Plate Diagram, Wiring Diagram, etc.). This means that specific details (receptacles, plugs, wires, connections, mounting brackets, external finishes, etc.) may not be accurately represented in images vs specifications. Please review specifications and do not order based solely on images.

SPLED-EPL-LED-50W-RT-STL-C1D2-M1 - C1D1 LED Street Light

Solar Panel Specs:

Listing: NRTL Listed for United States and Canada
Solar Cells: Crystalline Silicon
Panel Dimensions: 4.25"D x 14.5"W x 28.5"H
Cells Orientation: 72 Cells
Weight: -
Voltage: 24V (Nominal)
Maximum System Voltage: 600V
Watts: 190W
Current: 5A
Module Efficiency: 15.2%
Tolerance: +/- 5%
Limiting Reverse Current: 5.5A
Maximum Fuse Rating: 20A
Solar Panel Materials: Silver Anodized Aluminum (Frame), Polyester (Back), EVA (Encapsulant)
Cover: High Transmission 1/8" Glass
Mount: Pole Mount
Battery: (1) 176 aH Lithium Iron Phosphate - 100% Usable
Charge Controller: 16 aH - Class I, Division 2
Charge Controller Box: Class I, Division 2
Cord: 10' 16/2 SOOW Cord Between Control Box and LED Light
Connections: (4) Terminal Screw Connection Blocks
Wiring: 1/2"

Ratings/Approvals

Solar Panel Ratings:

Class I, Division 2

LED Light Ratings:

Class I, Divisions 1 & 2, Groups C,D
Class II, Divisions 1 & 2, Groups E,F,G
Class III, Divisions 1 & 2
NRTL Certified to UL 844 Ed. 13
NRTL Certified to UL 1598
NRTL Certified to C22.2 No. 137 Rev 2009
NRTL Certified to C22.2 No. 250.0
NRTL Certified to C22.2 No. 30-M-1986 Rev 2012
T5 Temperature Rating
Paint Spray Booth Approved

IEC 60529 Tested

IP67 Rated Waterproof
LEL Approved
Single LED Driver
80% Lumen Retention after 60,000 Hours

Larson Electronics LLC
9419 E US HWY 175, Kemp, TX 75143
Phone: 800.369.6671

www.LarsonElectronics.com
Email: sales@LarsonElectronics.com
Fax: 903.765.7664

LED Specs:
Listing: NRTL Listed for United States and Canada
Dimensions: 7.313" x 7.313" x 2" (Lamp Head Only)
Weight: -
Voltage: 11-25 Volts AC/DC
Total Watts: 50W
Total Lumens: 7,000
Luminous Efficacy: 140 Lm/W
Lamp Life: 60,000+ Hours
Color Temp: 5600K, 4500K, 3000K
Color Rendering Index: >75 CRI
Beam Angle: 60° or 125°
Lighting Configuration: Flood Pattern
Power Efficiency: >95%
Power Factor: 0.992
Ambient Operating Temp Range: -50° C to +65°C
Operating Temp Rating: T5
Housing Material: Copper Free Cast Aluminum
Housing Finish: Epoxy Powder Coated - Grey
Lens Material: Hardened Borosilicate Glass
Gasket Material: Silicone
Mounting: Pole Mount
Cord: 10' 16/2 SOOW Cord Between Control Box and LED Light

Special Orders - Special Requirements
Contact us for special requirements
Intl: 1-903-270-1187
Toll Free: 1-800-369-6671
Fax: 1-903-765-7664
E-mail: sales@larsonelectronics.com

The Larson Electronics SPLED-EPL-LED-50W-RT-STL-C1D2-M1 Solar Explosion Proof LED Street Light provides operators with a powerful and energy efficient alternative to traditional hazardous location luminaries. Equipped with a 190-watt Class I, Division 2 rated solar panel, LED technology and compact design makes this lamp an excellent replacement upgrade option for bulky and older incandescent, metal halide and high pressure sodium lights. A 176 aH lithium iron phosphate battery is available for solar energy storage and power for the Class I, Division 1 and 2 rated explosion proof LED light.

This solar explosion proof light fixture provides 7,000 lumens of high quality light while drawing only 50 watts. The copper free aluminum alloy body is powder coated for added durability and an attractive aesthetic appearance. Special heat dissipating design in conjunction with LED technology helps this fixture to achieve an excellent 60,000 hour rated lifespan with 80% lumen retention. Light weight and a low profile make this unit an attractive alternative to larger and heavier older fixtures and requires less hardware to install. The SPLED-EPL-LED-50W-RT-STL-C1D2-M1 explosion proof LED light also offers operators convenience in the form of field serviceability.

LED Benefits: Unlike gas burning and arc type lamps that have glass bulbs, LEDs have no filaments or fragile housings to break during operation and/or transportation. Instead of heating a small filament or using a combination of gases to produce light, light emitting diodes (LEDs) use semi-conductive materials that illuminate when electric current is applied, providing instant illumination with no warm up or cool down time before re-striking. Because there is no warm up period, this light can be cycled on and off with no reduction in lamp life.

LED lights run at significantly cooler temperatures than traditional metal halide and high pressure sodium lights and contain no harmful gases, vapors, or mercury, making them both safer and more energy efficient. No extra energy is wasted in cooling enclosed work areas due to external heat emissions from bulb type lights, and the operator risks associated with traditional lighting methods, such as accidental burns and exposure to hazardous substances

contained in the glass bulbs, are eliminated. In addition, LEDs are also safer for the environment as they are 100% recyclable, which eliminates the need for costly special disposal services required with traditional gas burning and arc type lamps.

LED Drivers: Even in LED fixtures, heat is the single largest factor in premature light failure and color shifting. As a result, many manufacturers reduce the output of their LEDs in order to reduce the amount of heat produced. Rather than lower light output or quality, Larson Electronics addresses this problem with the addition of an electronic LED driver. This internal driver provides the ability to automatically monitor and adjust input current to maintain the correct LED voltage levels regardless of input levels across a specific range. This not only reduces the energy dissipation, effectively lowering the operating temperature of the fixture, but also prevents AC over-voltage and short circuit loading making this fixture virtually maintenance free. Because the electronic driver allows the SPLED-EPL-LED-50W-RT-STL-C1D2-M1 to run at a cooler internal temperature and regulates the electrical current, energy efficiency and LED service hours are maximized while at the same time reducing operating costs and downtime incurred from the frequent servicing intervals required with other hotter running lights.

This LED light produces 7,000 lumens with a color temperature of 5600K and a color rendering index of 75 which produces colors and details much more accurately than high pressure sodium or mercury vapor luminaries. We also offer a 3000K warm white and 4500K natural white color temperature options (longer lead times may apply for non-standard temperatures).

Energy Consumption Comparison

	Metal Halide	LED
Wattage	175 watts	50 watts
Amp Draw @ 120V AC	1.69 amps	0.42 amps
Amp Draw @ 220V AC	0.92 amps	0.23 amps
Amp Draw @ 240V AC	0.85 amps	0.21 amps
Amp Draw @ 277V AC	0.73 amps	0.18 amps
Amp Draw @ 12V DC	16.77 amps	4.17 amps
Amp Draw @ 24V DC	8.39 amps	2.08 amps
Lamp Life Expectancy	20,000 hours	60,000+ hours
Operation cost per year (12hs/day @ 12c/kWh)	$241.78	$26.30

Each LED light fixture has the potential to save $150.00+ per year in electricity alone, not including maintenance costs, operational downtime, reduced productivity, HVAC loads, or carbon footprint. When retrofitting an entire facility with 100s of light fixtures, the return on investment of LED over metal halide becomes evident.

Solar Panel: The 190-watt solar panel operates on 24V (nominal) with a module efficiency rate of 15.2 percent. At maximum power, the unit offers 38V and a current of 5A. Featuring a Class C application class, the module comes with a 20A maximum fuse rating.

Battery: An included 176 aH lithium iron phosphate battery can be used to store solar energy and power the LED light. This battery is 100% usable. A Class I, Division 2 rated charge control box holds a 16 aH Class I, Division 2 charge controller and other components.

Cord: A 10' 16/2 SOOW cord is available between the control box and LED light.

Mounting: This explosion proof system is compatible with pole mounting installations.

Applications: Hazardous locations, flammable work sites, oil and gas, petrol refineries, grain storage, food processing, inspections, general illumination, street lighting and more.

At Larson Electronics, we do more than meet your lighting needs. We also provide replacement, retrofit, and upgrade parts as well as industrial grade power accessories. Our craftsmen can custom build any lighting system and/or accessories to fit the unique demands of your operation. A commitment to honesty, quality, and dependability has made Larson Electronics a leader in the lighting and electronics business since 1973. Contact us today at 800-369-6671 or message sales@larsonelectronics.com for more information about our custom options tailored to meet your specific industry needs.

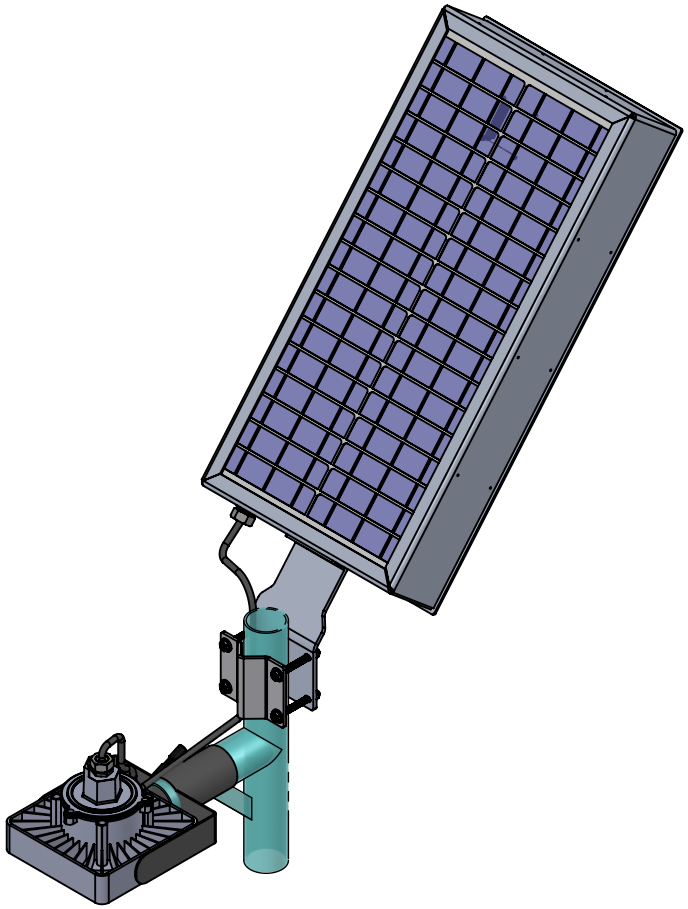

LARSON ELECTRONICS®

PART NUMBER:

SPLED-EPL-LED-50W-RT-STL-C1D2-M1

SIZE		REV
A		1

DIMENSIONS ARE IN INCHES				
DO NOT SCALE DRAWING	DATE	4/6/2026	SCALE: NTS	SHEET 1 OF 2

PROPRIETARY AND CONFIDENTIAL

THE INFORMATION CONTAINED IN THIS DRAWING IS THE SOLE PROPERTY OF LARSON ELECTRONICS LLC. ANY REPRODUCTION IN PART OR AS A WHOLE WITHOUT THE WRITTEN PERMISSION OF LARSON ELECTRONICS LLC IS PROHIBITED.

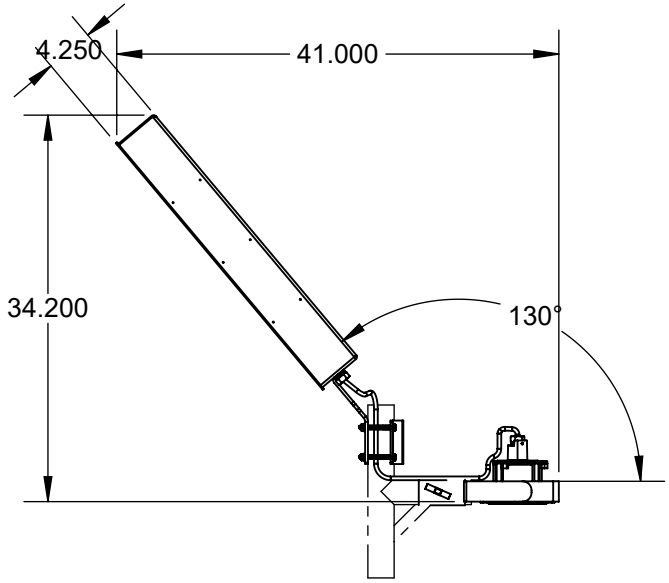

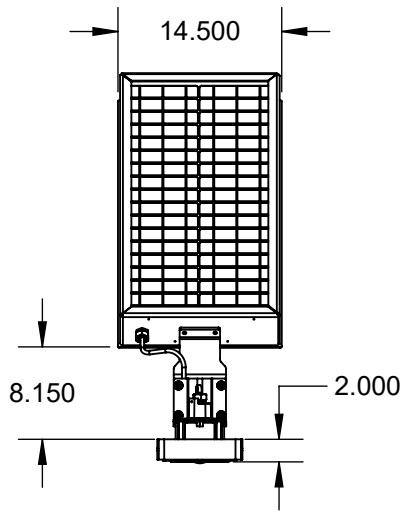

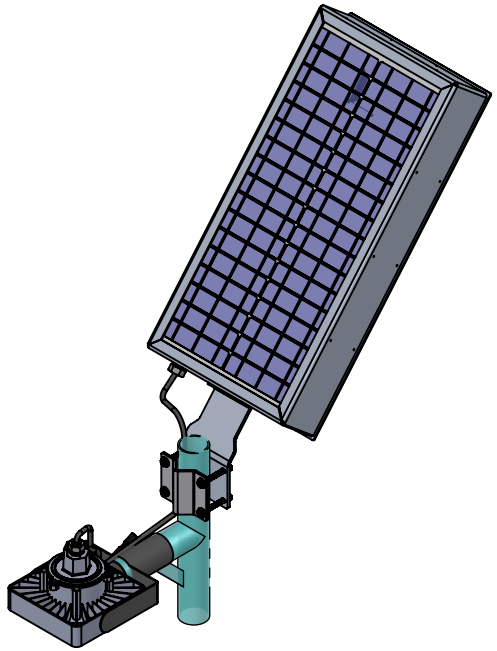

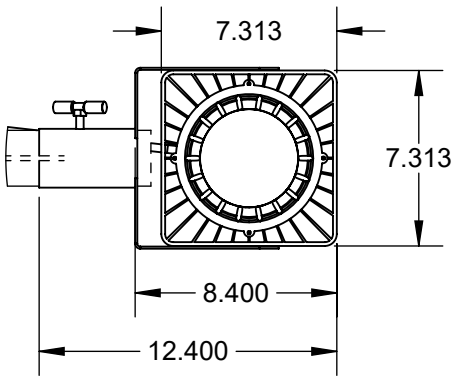

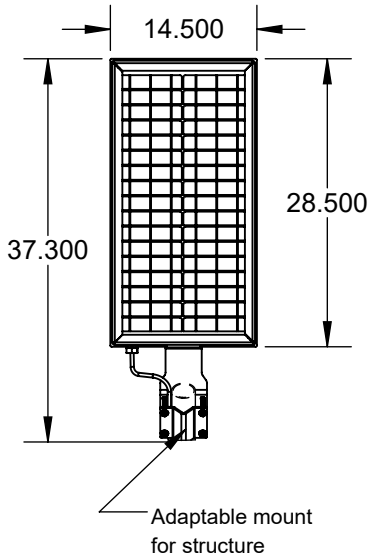

LARSON ELECTRONICS®

PART NUMBER:

SPLED-EPL-LED-50W-RT-STL-C1D2-M1

SIZE		REV
A		1

DIMENSIONS ARE IN INCHES				
DO NOT SCALE DRAWING	DATE	4/6/2026	SCALE: NTS	SHEET 2 OF 2

PROPRIETARY AND CONFIDENTIAL

THE INFORMATION CONTAINED IN THIS DRAWING IS THE SOLE PROPERTY OF LARSON ELECTRONICS LLC. ANY REPRODUCTION IN PART OR AS A WHOLE WITHOUT THE WRITTEN PERMISSION OF LARSON ELECTRONICS LLC IS PROHIBITED.

Larson Electronics LLC
9419 E US HWY 175, Kemp, TX 75143
Phone: 800.369.6671

www.LarsonElectronics.com
Email: sales@LarsonElectronics.com
Fax: 903.765.7664

Larson Electronics LLC
9419 E US HWY 175, Kemp, TX 75143
Phone: 800.369.6671

www.LarsonElectronics.com
Email: sales@LarsonElectronics.com
Fax: 903.765.7664

Frequently Asked Questions (FAQ)

There are no Faqs