Larson Electronics LLC
9419 E US HWY 175, Kemp, TX 75143
Phone: 800.369.6671

www.LarsonElectronics.com
Email: sales@LarsonElectronics.com
Fax: 903.498.3364

EPL-48-100LED-100C-EPP

Explosion Proof Low Profile Linear LED Light - Class I Div 1 - 4 Feet - 120-277V AC - 100 Foot Cord w/ Explosion Proof Cord Cap

Product ID: 285565

Larson Electronics LLC manufactures a wide variety of products, including custom built to spec designs. The pictures displayed for this unit are a general representation of form factor for the product line and may not accurately represent this exact configuration in every detail due to custom builds and changes between similar products in our standard catalog. The specifics for this configuration are listed in the specification table and supporting documentation (CAD files, Dimensional Drawing, Name Plate Diagram, Wiring Diagram, etc.). This means that specific details (receptacles, plugs, wires, connections, mounting brackets, external finishes, etc.) may not be accurately represented in images vs specifications. Please review specifications and do not order based solely on images.

EPL-48-100LED-100C-EPP Explosion Proof Linear
Wiring Hub: 100' Cord w/ 3/4 Inch Threaded Wiring Hub
Lamp Type: LED
Dimensions: 4.83"-W x 47.46"-L x 6.15"-H
Weight: 26 lb
Voltage: Universal 120-277 V AC, 50/60 Hz
Cord Cap Options: 5-15P, 5-20P, or 6-20P
Total Watts: 68 Watts
Lumens: 7,250
Luminous Efficacy: 106 Lm/W
LED Lamp Life Expectancy: 100,000+ Hours
Color Temp: 5000K
Beam Angle: 150°
Ambient Operating Temp Range: -40°C to 65°C
Operating Temp Rating: T4A Rated
Minimum Operating Temp: -40°C
Maximum Case Temp: 65°C
Mounting: Surface Standard - Pendant Optional

Ratings
Class I Division 1 Groups C & D
CSA 22.2 No. 137-M81
NRTl Certified to UL 844
NRTl Certified to UL 1598 Marine Type
NRTl Certified to UL 8750
NRTL Listed for United States & Canada
IP66 Rated
NEMA 4X

Special Orders - Special Requirements
Contact us for special requirements
Toll Free: 1-800-369-6671
Intl: 1-903-270-1187
Fax: 1-903-498-3364
E-mail: sales@larsonelectronics.com

Made in the USA

The EPL-48-100LED-100C-EPP from Larson Electronics is an Explosion Proof LED Light Fixture that is NRTL Listed for United States and Canada and rated Class I Division 1 for areas where flammable chemical/petrochemical vapors exist or have the potential to exist. This explosion proof LED light has a T4A temperature rating and is designed for low profile mounting to make the maximum use of available space.

The EPL-48-100LED-100C-EPP is comprised of solid state design LEDs, making this

explosion proof led fixture highly resistant to shock and vibrations and cooler running than comparable incandescent and HID light fixtures. This 68 Watt LED fixture draws less than one amp on a 120-277 Volt AC power system while producing 7,250 lumens of bright white light, producing efficiency that reduces power consumption and operating costs without compromising light output or quality.

Click Photo to Enlarge

Click Photo to Enlarge

Click Photo to Enlarge

This explosion proof linear LED fixture contains no ballast box normally associated with fluorescent fixtures, which reduces overall weight and creates a slimmer unit profile. The solid state LEDs have a 100,000+ hour service life, which results in extreme efficiency and greatly reduced maintenance costs. The solid state design of the LED lamps give this fixture superior resistance to damage from vibration, extremes in temperature and a lamp service life over twice that of standard T5 fixtures.

LED Benefits: Unlike gas burning and arc type lamps that have glass bulbs, LEDs have no filaments or fragile housings to break during operation and/or transportation. Instead of heating a small filament or using a combination of gases to produce light, light emitting diodes (LEDs) use semi-conductive materials that illuminate when electric current is applied, providing instant illumination with no warm up or cool down time before re-striking. Because there is no warm up period, this light can be cycled on and off with no reduction in lamp life.

LED lights run at significantly cooler temperatures than traditional metal halide and high pressure sodium lights and contain no harmful gases, vapors, or mercury, making them both safer and more energy efficient. No extra energy is wasted in cooling enclosed work areas due to external heat emissions from bulb type lights, and the operator risks associated with traditional lighting methods, such as accidental burns and exposure to hazardous substances contained in the glass bulbs, are eliminated. In addition, LEDs are also safer for the environment as they are 100% recyclable, which eliminates the need for costly special disposal services required with traditional gas burning and arc type lamps.

This light is multi-voltage capable and can be operated with 100-277 V AC, 50/60 Hz without any need for a special ballast. The housing is specially designed to dissipate heat which increases the efficiency and lifespan of the LED luminaries. The LED lamp produces 7,250 lumens with a color temperature of 5000K and a color rendering index of 75, which produces colors and details much more accurately than high pressure sodium or mercury vapor luminaries. The EPL-48-100LED-100C-EPP is available in surface mounting and pendant mounting options and ideal for installation in locations where space is at a premium.

Click Photos to Enlarge

5-15 Straight Blade Plug

5-20 Straight Blade Plug

6-20 Straight Blade Plug

Wiring & Plug: This explosion proof LED light is equipped with 100 feet of 16/3 chemical and abrasion resistant SOOW cord that is fitted with an explosion proof cord cap for easy connection to explosion proof outlets. Plug options include a 5-15 15 amp

straight blade plug for use with 120 V explosion proof outlets, a 5-20 20 amp straight blade plug for use with 120 V explosion proof outlets, or a 6-20 20 amp straight blade plug for use with 220-240 V explosion proof outlets. ***PLEASE NOTE** voltage ratings on plugs and outlets are MAXIMUM voltage. For low voltage applications, proper voltage must be applied to the outlet or damage to the light fixture will occur.*
At Larson Electronics, we do more than meet your lighting needs. We also provide replacement, retrofit, and upgrade parts as well as industrial grade power accessories. Our craftsmen can custom build any lighting system and/or accessories to fit the unique demands of your operation. A commitment to honesty, quality, and dependability has made Larson Electronics a leader in the lighting and electronics business since 1973. Contact us today at 800-369-6671 or message sales@larsonelectronics.com for more information about our custom options tailored to meet your specific industry needs.

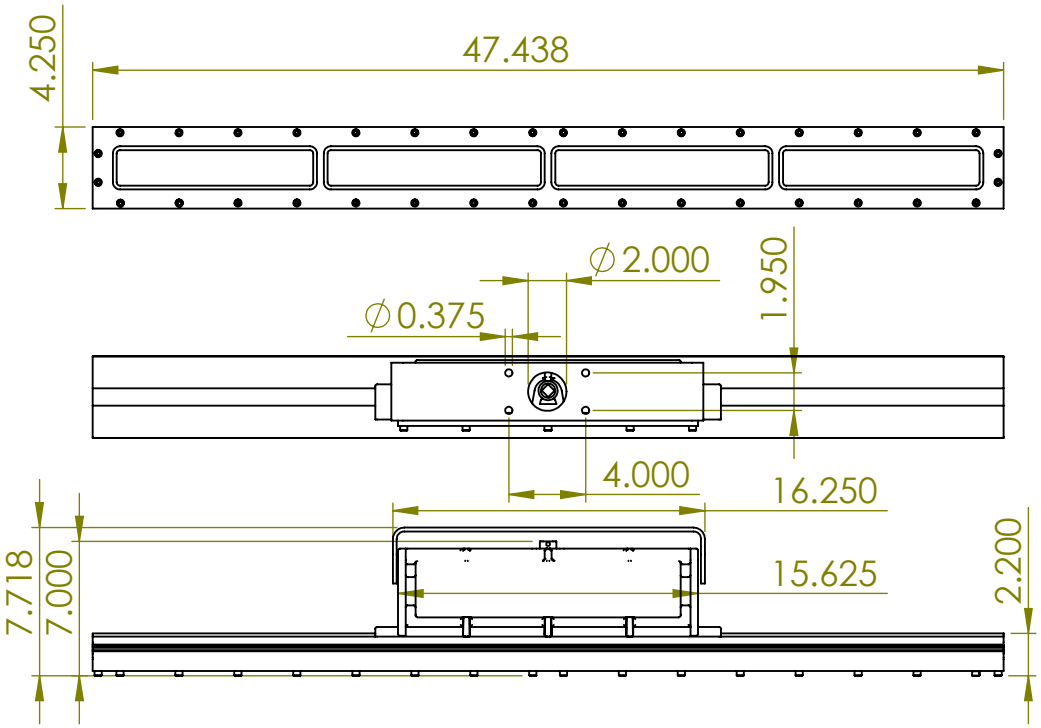

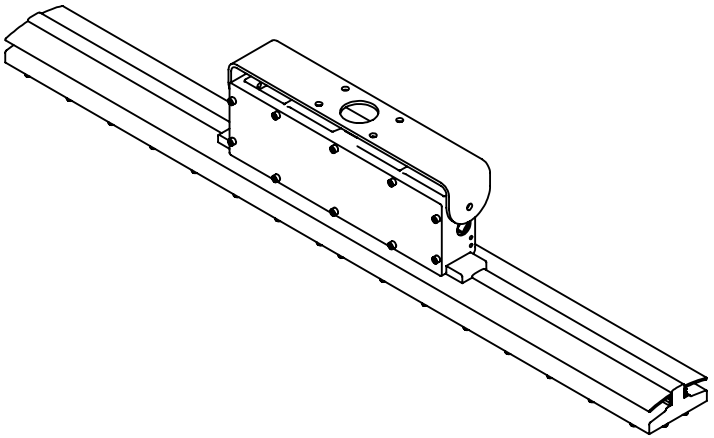

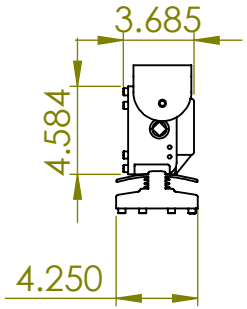

Larson Electronics

		UNLESS OTHERWISE SPECIFIED:		NAME	DATE
		DIMENSIONS ARE IN INCHES TOLERANCES: FRACTIONAL ± ANGULAR: MACH ± BEND ± TWO PLACE DECIMAL ± THREE PLACE DECIMAL ±	DRAWN		
			CHECKED		
			ENG APPR.		
			MFG APPR.		
		INTERPRET GEOMETRIC TOLERANCING PER:	Q.A.		
		MATERIAL	COMMENTS:		
NEXT ASSY	USED ON	FINISH			
APPLICATION		DO NOT SCALE DRAWING			

TITLE:

EPL-48-100LED-SFC

SIZE	DWG. NO.	REV
A		
SCALE: 1:2		SHEET 1 OF 1

PROPRIETARY AND CONFIDENTIAL

THE INFORMATION CONTAINED IN THIS DRAWING IS THE SOLE PROPERTY OF <INSERT COMPANY NAME HERE>. ANY REPRODUCTION IN PART OR AS A WHOLE WITHOUT THE WRITTEN PERMISSION OF <INSERT COMPANY NAME HERE> IS PROHIBITED.

5 4 3 2 1

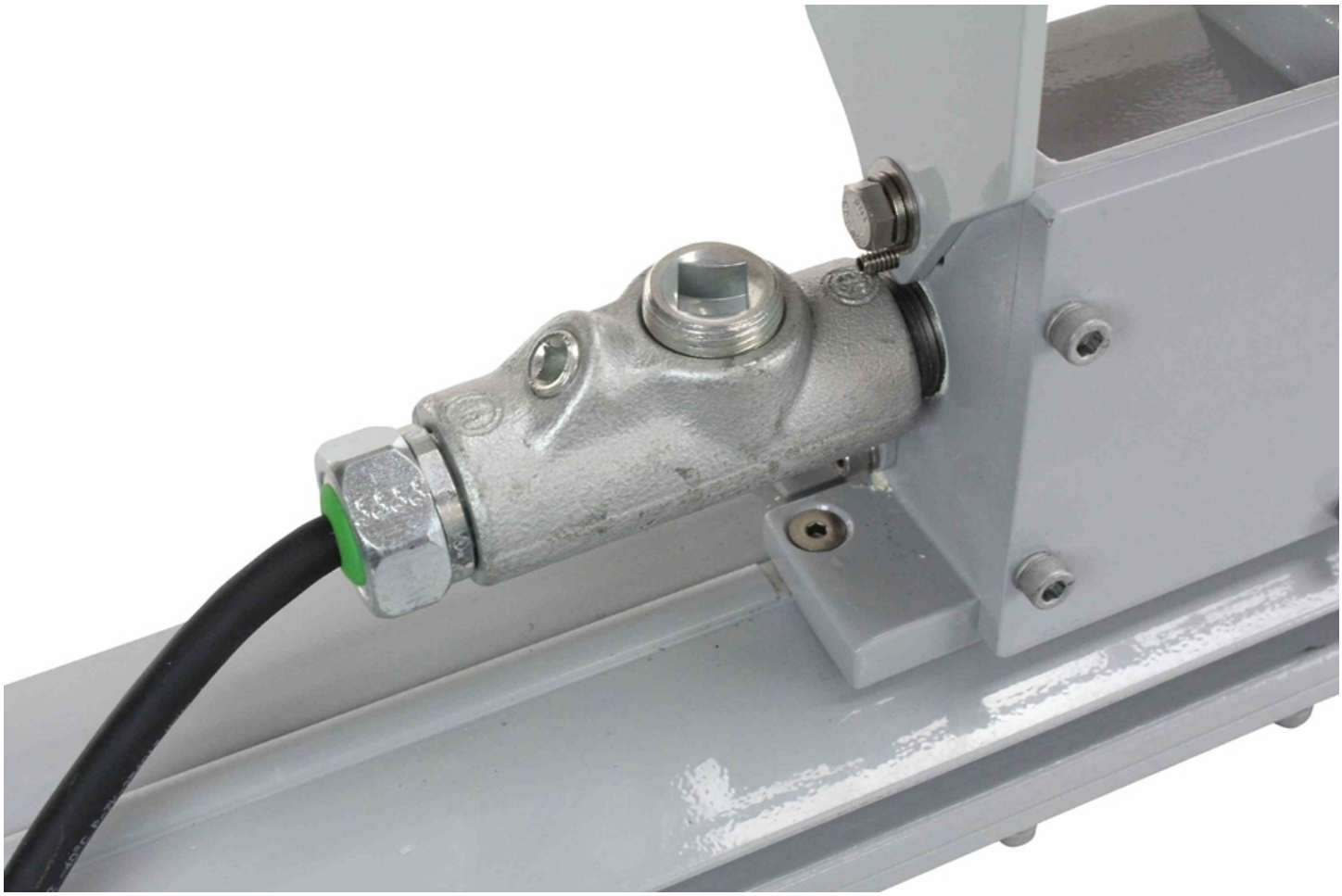

Frequently Asked Questions (FAQ)