Larson Electronics LLC
9419 E US HWY 175, Kemp, TX 75143
Phone: 800.369.6671

www.LarsonElectronics.com
Email: sales@LarsonElectronics.com
Fax: 903.765.7664

MPD-DS-FS-FDS-3P-4W-600V-3000A-EF-BM-N3R-TD

Fused Disconnect Switch, 3000 Amp, 600V 3PH AC, 3-Pole 4-Wire, (3) Class L Time Delay Fuses, NEMA 3R

Product ID: 285067

Image: MPD-DS-FS-FDS-3P-4W-600V-3000A-EF-BM-N3R-TD

Larson Electronics LLC manufactures a wide variety of products, including custom built to spec designs. The pictures displayed for this unit are a general representation of form factor for the product line and may not accurately represent this exact configuration in every detail due to custom builds and changes between similar products in our standard catalog. The specifics for this configuration are listed in the specification table and supporting documentation (CAD files, Dimensional Drawing, Name Plate Diagram, Wiring Diagram, etc.). This means that specific details (receptacles, plugs, wires, connections, mounting brackets, external finishes, etc.) may not be accurately represented in images vs specifications. Please review specifications and do not order based solely on images.

MPD-DS-FS-FDS-3P-4W-600V-3000A-EF-BM-N3R-TD Disconnect Switch - Fused Disconnect

Unit Type: Service Entrance Fused Disconnect Switch
Line-In: N/A (customer provided)
Line-In Cord Cap: N/A (customer provided)
Line-In Connections: Terminal Lugs, Accepts 750MCM-1/0
Line-In Orientation: Bottom Feed
Voltage (V): 600V AC Delta or Wye
Phase (PH): 3-Phase
Frequency (Hz): 60 Hz (60-Cycles)
Protection Method: Fused, Class L Type Fuse
Protection Type: Time Delay Fuse
Protection Fuses: (3) Fuses, Included
Protection Ampacity: 3000A
Mains Rating (Amps): 3000A
Interrupting Rating: 200 kA @ 600V AC
Disconnect Means: Manual via Handle
Neutral Connection: Insulated Groundable Neutral Kit with Bonding Strap
Line-Out: N/A (customer provided)
Line-Out Cord Cap: N/A (customer provided)
Line-Out Connection: Terminal Lugs, Accepts 750MCM-1/0
Line-Out Orientation: Bottom Feed
Form Factor: Rectangular, Slim-profile Enclosure w/ Lockable Door
Door: (1) Left Hinged Door w/ Pad Lockable Handle
Enclosure Material: 11GA Sheet Steel
Enclosure Finish: ANSI 49 Grey

Ratings

NRTL Listed Service Equipment
NRTL Listed to UL 891 Dead Front Switch Boards
NEMA 3R Rated for Indoor and Outdoor Use

Made in the USA

Special Orders - Special Requirements

Larson Electronics LLC
9419 E US HWY 175, Kemp, TX 75143
Phone: 800.369.6671

www.LarsonElectronics.com
Email: sales@LarsonElectronics.com
Fax: 903.765.7664

Enclosure Type: NEMA 3R Ventilated
Dimensions: 43"-W x 36"-D x 90"-H
Weight: 800 lbs
Shipping Dimensions: 58"-W x 44"-L x 98"-H
Shipping Weight: 850 lbs
Larson Electronics manufactures a wide variety of custom power distribution systems. The pictures displayed for this unit are a general representation of form factor and may not accurately represent this exact configuration in every detail due to being custom builds. The specifics for this configuration are listed in the specification table and one-line diagram.

Contact us for special requirements
Toll Free: 1-800-369-6671
Intl: 1-903-270-1187
Fax: 1-903-765-7664
E-mail: sales@larsonelectronics.com

All grounding shall comply with state and local codes and meet the minimum requirements of the National Electronic Code section 250

Made in the USA

The Larson Electronics MPD-DS-FS-FDS-3P-4W-600V-3000A-EF-BM-N3R-TD Power Distribution Disconnect Switch is designed for reliable, safe and convenient power distribution at industrial work sites. This fused disconnect includes three 3000-amp 600V rated Class L fuses. Designed for floor mounting installations, the bottom feed disconnect switch is protected by a NEMA 3R rated, steel enclosure with a ventilated design.

PLEASE NOTE: ANY FREE SHIPPING OFFERS DO NOT APPLY TO POWER DISTRIBUTION PANELS, TRANSFORMERS, OR SUBSTATIONS*

The MPD-DS-FS-FDS-3P-4W-600V-3000A-EF-BM-N3R-TD service entrance disconnect switch provides a safe and reliable way for operators in industrial settings to tap into and utilize power sources independently of the work area. Compatible with three-phase 600V AC Delta or Wye, the disconnect switch features a manual operating handle. This bottom feed disconnect carries a 200 kA at 600V AC interrupt rating. The switchgear comes with and accepts three 3000-amp 600V rated Class L time delay fuses. An insulated groundable neutral kit with bond strap is included for neutral connections.

Operation: The dead front disconnect switch features a locking door. The door provides access to a permanently attached operating handle, which is used for manually disconnecting or connecting power. A dead front cover protects operators from the fuses for safety. Operators can inspect the fuses through the dead front via a vented cover. Removing the dead front allows access to the fuses.

Time Delay vs. Fast Acting Fuses Two of the most common types of fuses found in power distribution equipment are time delay and fast acting fuses.

> **Time Delay:** Time delay fuses are tripped once overcurrent heat builds up enough to melt the fuse element over a period of time. That period of time varies between different time delay fuses depending on the application. Time delay fuses decrease the chances of false tripping. During startup, many components require a large current for a very short amount of time. In other words, a time delay fuse disconnects the circuit only when the overcurrent persists in the line.
>
> **Fast Acting:** Fast acting fuses are tripped immediately upon sensing an overcurrent or short circuit in the line. They are ideal for electronics, components, or systems that cannot withstand sudden changes in current. A fast acting fuse will not withstand a temporary overload such as one that occurs during the startup process.

Enclosure Design: The disconnect switch is protected by an 11GA sheet steel enclosure with ANSI 49 grey finish. A ventilated design promotes natural cooling and improves performance. The enclosure is NEMA 3R rated for protection against water, moisture and debris. This rating

allows the fused disconnect to be used in indoor and outdoor areas.

Certification: This disconnect switch is NRTL listed to UL 891 dead front switchboards and NRTL listed for service equipment.

Mount: Operators can mount the service entrance disconnect on floors and flat surfaces.

Customization: The MPD-DS-FS-FDS-3P-4W-600V-3000A-EF-BM-N3R-TD can be customized to meet specific operating and power requirements. Example of customizations include:

• Making the fused disconnect portable and certified to NRTL UL 1640 for portable equipment

• Adding single pole camlock connectors for quick connections

• Adding heaters for cold environments

• Aiding alarm relays for trip notification down stream

• Adding powering meters

Applications: This switchgear is suitable for indoor/outdoor use and applications including, but not limited to, construction sites, plant maintenance, plant turnarounds, hazardous location operations, shows, exhibits, and shipyard operations.

At Larson Electronics, we do more than meet your lighting needs. We also provide replacement, retrofit, and upgrade parts as well as industrial grade power accessories. Our craftsmen can custom build any lighting system and/or accessories to fit the unique demands of your operation. A commitment to honesty, quality, and dependability has made Larson Electronics a leader in the lighting and electronics business since 1973. Contact us today at 800-369-6671 or message sales@larsonelectronics.com for more information about our custom options tailored to meet your specific industry needs.

REV	DESCRIPTION	DATE
A	PRODUCTION RELEASE	12/19/2024

MPD-DS-FS-FDS-3P-4W-600V -3000A-EF-BM-N3R-TD

LARSON ELECTRONICS®

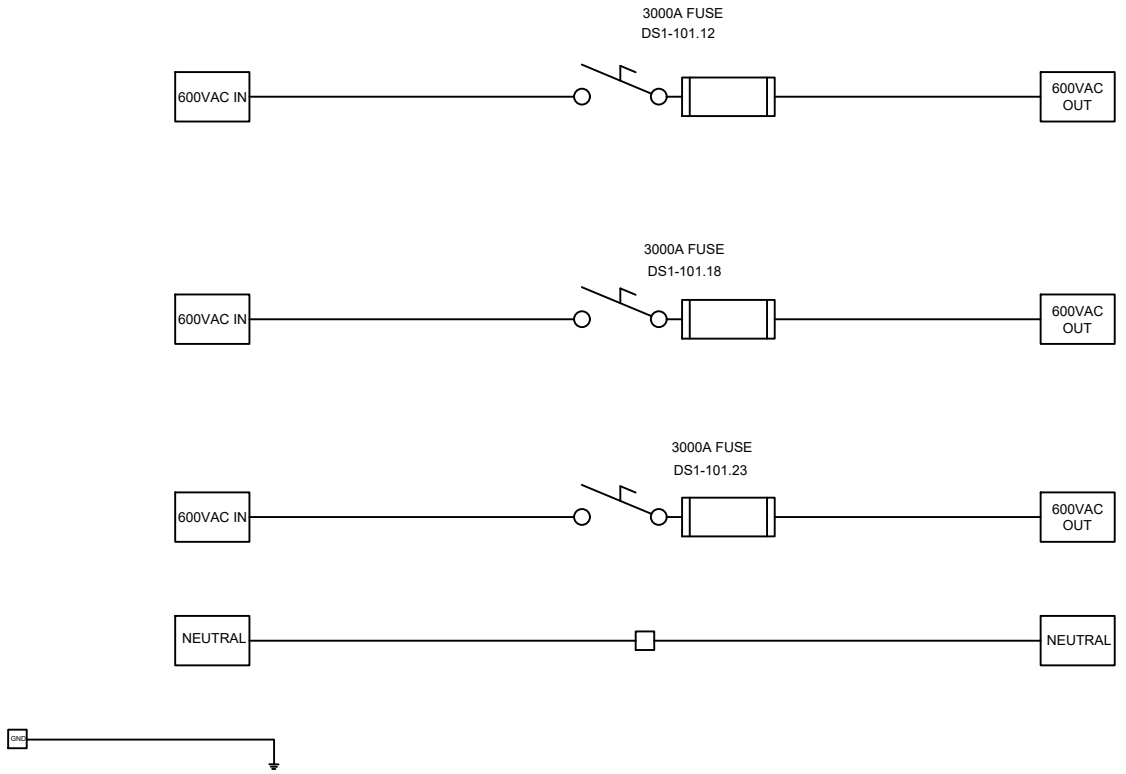

TAGS	QTY	CATALOG	DESCRIPTION
DS1-101.12 DS1-101.18 DS1-101.23	3	UNV00019858	3000A CL FUSE AT 600VAC CALSS L.

LARSON ELECTRONICS
9419 E US HWY 175,
KEMP, TX 75143

TITLE	MPD-DS-FS-FDS-3P-4W-600V -3000A-EF-BM-N3R-TD		
DRAWN BY	A.HIRSH	DATE	12/19/2024	REV	A
CHECKED BY	S.DESAI	SHEET #	1 OF 1	DRAWING #	101

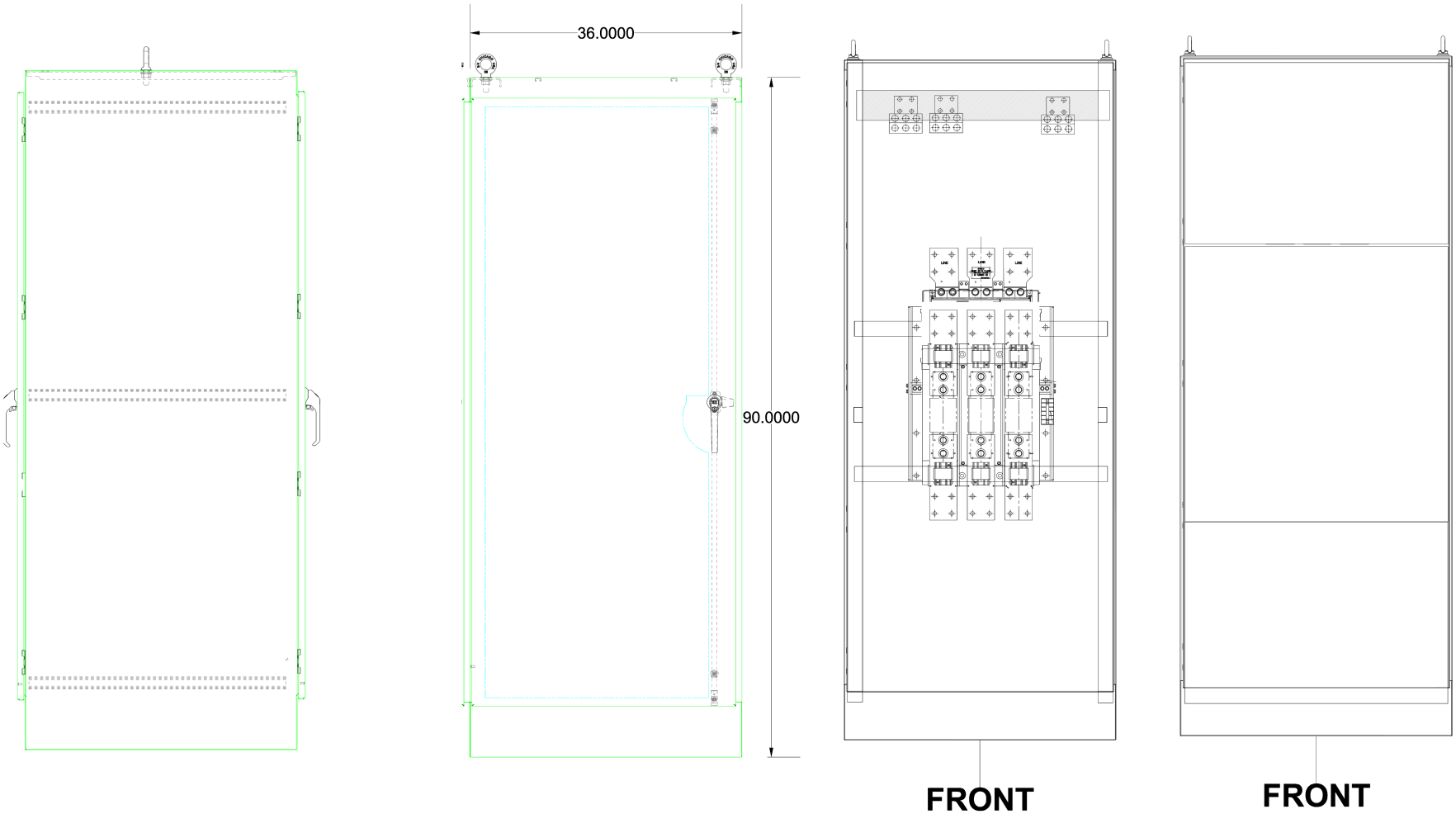

TITLE:

MPD-DS-FS-FDS-3P-4W-600V-3000A-EF-BM-N3R

PROPRIETARY AND CONFIDENTIAL
THE INFORMATION CONTAINED IN THIS DRAWING IS THE SOLE PROPERTY OF LARSON ELECTRONICS LLC. ANY REPRODUCTION IN PART OR AS A WHOLE WITHOUT THE WRITTEN PERMISSION OF LARSON ELECTRONICS LLC IS PROHIBITED.

LARSON ELECTRONICS

		NAME
DIMENSIONS ARE IN INCHES	DRAWN	
MATERIAL	CHECKED	JEREMY BLANKENSHIP
DO NOT SCALE DRAWING		

SIZE	DWG. NO.	REV
A		

SHEET 1 OF 1

5 4 3 2 1

Larson Electronics LLC
9419 E US HWY 175, Kemp, TX 75143
Phone: 800.369.6671

www.LarsonElectronics.com
Email: sales@LarsonElectronics.com
Fax: 903.765.7664

Larson Electronics LLC
9419 E US HWY 175, Kemp, TX 75143
Phone: 800.369.6671

www.LarsonElectronics.com
Email: sales@LarsonElectronics.com
Fax: 903.765.7664

Larson Electronics LLC
9419 E US HWY 175, Kemp, TX 75143
Phone: 800.369.6671

www.LarsonElectronics.com
Email: sales@LarsonElectronics.com
Fax: 903.765.7664

Larson Electronics LLC
9419 E US HWY 175, Kemp, TX 75143
Phone: 800.369.6671

www.LarsonElectronics.com
Email: sales@LarsonElectronics.com
Fax: 903.765.7664

Certification

Manufacturer: Larson Electronics LLC
Address: 9419 US-HWY 175
Kemp, Texas 75143

Declare the following equipment conforms to the standard(s) as listed:

Model: MPD-DS Series
Description: Disconnect Switch Panels

The MPD-DS series of Disconnect Switch Panels are comprised of a NEC (National Electrical Code, United States) and CEC (Canadian Electrical Code, Canada) Listed fuse assemblies, non fused assemblies, and circuit breakers from various manufacturers. These components are manufactured to NEC and CEC requirements. Larson Electronics LLC builds the control panel and housing assembly. This assembly is built to NEC and CEC standards under UL 508A and CSA C22.2 No 14.

Signed for and on behalf of: Larson Electronics, LLC
Place of issue: Kemp, TX

Signature: James Thomas

Name: James Thomas
Position: Operations Manager

Material Safety Data Sheet

To Whom It May Concern,

Larson Electronics LLC MPD-DS Series industrial line of Disconnect Switch Panels are considered "ARTICLES" under 29 CFR 1910-1200, the OSHA Hazard Communication Standard, and do not require a Material Safety Data Sheet (MSDS).

Articles are specifically exempt from the regulations of this standard. OSHA defines an article as follows:

1910-1200(c) – Article means a manufactured item other than a fluid or particle:

i. Which is formed to a specific shape or design during manufacture;
ii. Which has end use function(s) dependent in whole or in part upon its shape or design during end use; and
iii. Which under normal conditions does not release more than very small quantities.

Regards,

Ray Smith
Larson Electronics, LLC.

LARSON ELECTRONICS LLC • 9419 E US HWY 175 • KEMP, TX 75143
p: 1-800-369-6671 • intl: 903-498-3363 • f: 903-498-3364 • sales@larsonelectronics.com

Intertek

<- Back

Product Description

Title:	INDUSTRIAL CONTROL PANELS
Company:	LARSON ELECTRONICS LLC - Kemp, TX USA
Product Information:	Industrial Control Panels For General Use.
Evaluated to the following:	A representative sample of the listed devices have been tested, investigated and found to comply with the requirements of the Standard(s) for Industrial Control Panels (UL-508A) and are identified with the ETL Listed Mark.

<- Back

Contact Us

Americas+1-888-347-5478
(or +1-312-906-7801)
Email
dirlist@intertek.com

Intertek Home
Product Directories

Inspector Center

Get up-to-date information on everything from our Accreditations to our Certifications and Marks. Learn more...

News

Intertek Unveils New Design for Product Safety and Quality Certification Marks. Learn more...

© 2010 Intertek All Rights Reserved.
All other product or service names are the property of their respective owners.

intertek
Total Quality. Assured.

<- Back

Product Description

Title:	INDUSTRIAL CONTROL EQUIPMENT
Company:	LARSON ELECTRONICS LLC - Kemp, TX USA
Product Information:	Industrial Control Panels For General Use. Power Distribution System, Model Nos. MGL, MPD, MGS series; Followed by AAK-PBB.FFF-SCC.GGG-EEXCCC.DDD; Where AA = 2,3,5,7,9,15,20,25,30,45,50,75; BB = 1P, 3P; FFF = 480,240,208,120; CC = 1P,3P; GGG = 480,240,208,120; EE = # of outlets; CCC = voltage; DDD = outlet amperage.
Evaluated to the following:	A representative sample of the listed devices have been tested, investigated and found to comply with the requirements of the Standard(s) for Industrial Control Equipment (CAN/CSA-C22.2 No. 14) and are identified with the cETL Listed Mark.

<- Back

Contact Us

ETL listed products that are in doubt or for products that do not appear in the directory, please request a verification of certification.
Americas+1-888-347-5478 (or +1-847-660-7407)
Email etldirectory@intertek.com

Intertek Home
Product Directories
DLP on mobile devices

Inspector Center

Get up-to-date information on everything from our Accreditations to our Certifications and Marks. Learn more...

News

Intertek Unveils New Design for Product Safety and Quality Certification Marks. Learn more...

© 2010 Intertek All Rights Reserved.
All other product or service names are the property of their respective owners.

Certification

Manufacturer: Larson Electronics LLC
Address: 9419 US-HWY 175
Kemp, Texas 75143

Declare the following equipment conforms to the standard(s) as listed:

Model: MPD-DS Series
Description: Disconnect Switch Panels

The MPD-DS series complies with the below standards set forth by the listed Association's requirements. Purchased and manufactured components are evaluated to Larson Electronics LLC Quality Control Management system per ISO 9001:2015. This certification applies to all specimens manufactured in accordance to the manufacture's drawings.

Evaluated Standards:

AISC: Structural steel skid design
NFPA 70: National Electrical Code
ASTM A36: Standard Specification for Carbon Structural Steel
ASTM A123: Standard Specification for Zinc (Hot-Dip Galvanized) Coatings on Iron and Steel Products
ASTM A153: Standard Specification for Zinc Coating (Hot-Dip) on Iron and Steel Hardware
ASTM A489: Standard Specification for Carbon Steel Lifting Eyes
ASTM A502: Standard Specification for Rivets, Steel, Structural
ASTM A563: Standard Specification for Carbon and Alloy Steel Nuts
ASTM A500: Standard Specification for Cold-Formed Welded and Seamless Carbon Steel Structural Tubing in Rounds and Shapes
ASTM B172: Standard Specification for Rope-Lay-Stranded Copper Conductors Having Bunch-Stranded Members, for Electrical Conductors
ASTM D7803: Standard Practice for Preparation of Zinc (Hot-Dip Galvanized) Coated Iron and Steel Product and Hardware Surfaces for Powder Coating
SAE J429: Mechanical and Material Requirements for Externally Threaded Fasteners
AWS D1.1: Structural Welding – Steel
ICEA S-58-679: Standard for Control, Instrumentation and Thermocouple Extension Conductor Identification
ICEA S-75-381: Portable and Power Feeder Cables for Use in Mines and Similar Applications
NEMA OFP 1-2017: Protection of Receptacle Outlets in Wet Locations According to the National Electrical Code

NEMA PB 1-2011: Panelboards
NEMA WD 1-1999 (R2015): General Color Requirements for Wiring Devices
ANSI C80.1-2015: American National Standard for Electric Rigid Steel Conduit
ANSI C119.4-2016: American National Standard for Electric Connectors
ANSI Z535.4-2011: American National Standard for Product Safety Signs and Labels
ANSI/IEC 60529-2004 (R2011): American National Standard for Degrees of Protection Provided by Enclosures (IP Code)

Signed for and on behalf of: Larson Electronics, LLC
Place of issue: Kemp, TX

Signature: James Thomas

Name: James Thomas
Position: Operations Manager

LARSON ELECTRONICS LLC • 9419 E US HWY 175 • KEMP, TX 75143
p: 1-800-369-6671 • intl: 903-498-3363 • f: 903-498-3364 • sales@larsonelectronics.com

Certification

Manufacturer: Larson Electronics LLC
Address: 9419 US-HWY 175
Kemp, Texas 75143

Declare the following equipment conforms to the standard(s) as listed:

Model: MPD-DS Series
Description: Disconnect Switch Panels

Evaluated Listings:

CE: DIRECTIVE 2014/35/EU - LOW VOLTAGE DIRECTIVE
CE: DIRECTIVE 2014/30/EU - EMC DIRECTIVE
CE: Regulation (EC) No 1907/2006 - REACH REGULATION
CE: DIRECTIVE 2015/863/EU - ROHS DIRECTIVE

The MPD-DS series complies with the essential protection requirements of the European Parliament of the Council Directive for Low Voltage Directive, EMC Directive, REACH Regulation, and RoHS Directive. This certification applies to all specimens manufactured in accordance to the manufacture's drawings.

Signed for and on behalf of: Larson Electronics, LLC
Place of issue: Kemp, TX

Signature: James Thomas

Name: James Thomas
Position: Operations Manager

Certification

Manufacturer: Larson Electronics LLC
Address: 9419 US-HWY 175
Kemp, Texas 75143

Declare the following equipment conforms to the standard(s) as listed:

Model: MPD-DS Series
Description: Disconnect Switch Panels

Evaluated Listings:

CE: Regulation (EC) No 1907/2006 - REACH REGULATION
CE: DIRECTIVE 2015/863/EU - ROHS DIRECTIVE

This is to certify that products offered by Larson Electronics LLC comply with the Reduction of Hazardous Substances (RoHS) directives. Directive 2002/95/EC became effective on 1 July 2006. It restricts the use of six substances in the manufacture of electrical and electronic equipment. This directive was revised in June 2011 and is now referred to as directive 2011/65/EU. Directive 2015/863/EU amending Annex II to Directive 2011/65/EU announced plans to add four substances from 22 July 2019.

We hereby certify that the equipment specified above conforms to the Directive(s) by containing less of the restricted substances than the stated limits.

Signed for and on behalf of: Larson Electronics, LLC
Place of issue: Kemp, TX

Signature: James Thomas

Name: James Thomas
Position: Operations Manager

Certification

Manufacturer: Larson Electronics LLC
Address: 9419 US-HWY 175
Kemp, Texas 75143

Declare the following equipment conforms to the standard(s) as listed:

Model: MPD-DS Series
Description: Disconnect Switch Panels

Evaluated Listings:

CE: Regulation (EC) No 1907/2006 - REACH REGULATION

This letter establishes the opinion of Larson Electronics LLC regarding the status, under the current European Union ("EU") Regulations on Registration, Evaluation, Authorization, and Restriction of Chemical Substances ("REACH").

REACH does not apply to manufactured products which are referred to as "completed articles". Substances (chemicals) are subject to REACH registration, NOT products.

In addition, Articles are exempt from the REACH requirements if (a) the Article does not contain a substance of very high concern or candidate substance in an amount exceeding 0.1% weight by weight, and (b) if substances present in the Article in excess of 1 ton per year per importer are not expected nor intended to be released.

Based on communication with our raw material suppliers, we conclude that to the best of our knowledge our products requiring REACH compliance do not contain any of the currently listed SVHC in concentrations of 0.1% or above.

Accordingly, we foresee no registration or pre-registration requirement for the products we supply.

Signed for and on behalf of: Larson Electronics, LLC
Place of issue: Kemp, TX

Signature: James Thomas

Name: James Thomas
Position: Operations Manager

Certification

Manufacturer: Larson Electronics LLC
Address: 9419 US-HWY 175
Kemp, Texas 75143

Declare the following equipment conforms to the standard(s) as listed:

Model: MPD-DS Series
Description: Disconnect Switch Panels

Evaluated Listings:

FCC: Radio Frequency Emission & Authorization Status

The MPD-DS Series complies with Federal Communications Commission requirements for Radio Frequency Emission & Authorization Status. This product is not capable of emitting rf energy and does not require FCC authorization. This certification applies to all specimens manufactured in accordance to the manufacture's drawings.

Signed for and on behalf of: Larson Electronics, LLC
Place of issue: Kemp, TX

Signature: James Thomas

Name: James Thomas
Position: Operations Manager

Larson Electronics LLC
9419 E US HWY 175, Kemp, TX 75143
Phone: 800.369.6671

www.LarsonElectronics.com
Email: sales@LarsonElectronics.com
Fax: 903.765.7664

Frequently Asked Questions (FAQ)

There are no Faqs