Larson Electronics LLC
9419 E US HWY 175, Kemp, TX 75143
Phone: 800.369.6671

www.LarsonElectronics.com
Email: sales@LarsonElectronics.com
Fax: 903.765.7664

MPD-CS1-CS.50AF-SZ0-Z-1.C04-1.L09-1.L08-4.N10-M1

Portable Spider Box - 125/250V Input - (1) 50A CS6369 FT, (6) Receptacles

Product ID: 282029



Image: MPD-CS1-CS.50AF-SZ0-Z-1.C04-1.L09-1.L08-4.N10-M1

Larson Electronics LLC manufactures a wide variety of products, including custom built to spec designs. The pictures displayed for this unit are a general representation of form factor for the product line and may not accurately represent this exact configuration in every detail due to custom builds and changes between similar products in our standard catalog. The specifics for this configuration are listed in the specification table and supporting documentation (CAD files, Dimensional Drawing, Name Plate Diagram, Wiring Diagram, etc.). This means that specific details (receptacles, plugs, wires, connections, mounting brackets, external finishes, etc.) may not be accurately represented in images vs specifications. Please review specifications and do not order based solely on images.

MPD-CS2-CS-SZ0SZ-ZZ-1.C04-1.L09.L08-4.N10-M1 Spider Box
Input: 50A CS6375 Inlet
Primary Voltage: 125/250V AC
Output: 50A CS6369 Feed Through
Secondary Voltage: 125V and 250V
Secondary Receptacles: (1) 30A 250V (L6-30R), (1) 20A 250V (L6-20R), (4) 20A 125V (5-20R) GFCI Receptacles
Secondary Protection: Ground Fault Circuit Interrupter
GFI Trip Level: 4-6 mA
Housing Material: 16-gauge Steel
Mounting: Portable/Base Stand
Dimensions: 11" x 21" x 14.5"
Weight: 29 lbs
Color: Yellow
Larson Electronics manufacture a wide variety of custom power distribution systems. The pictures displayed for this unit are a general representation of form factor and may not accurately represent this exact configuration in every detail due to being custom builds. The specifics for this configuration are listed in the specification table and one-line diagram.

Ratings/Approvals
NRTL Listed to UL 1640
NEMA 3R Weatherproof
Overload Protection
Short Circuit Protection

Special Orders - Special Requirements
Contact us for special requirements
Toll Free: 1-800-369-6671
Intl: 1-903-270-1187
Fax: 1-903-765-7664
E-mail:sales@larsonelectronics.com

All grounding shall comply with state and local codes and meet the minimum requirements of the National Electronic Code section 250

This unit is Made In USA - Manufactured in Texas

The Larson Electronics MPD-CS2-CS-SZ0SZ-ZZ-1.C04-1.L09.L08-4.N10-M1 is a portable spider box for indoor, outdoor and rugged applications. This unit allows operators to use 125/250V power via a CS6375 electrical inlet. The device supports one feed through

receptacle for 125/250V equipment, as well as six output receptacles. For robust protection, the spider box is NEMA 3R rated and protected by impact/flame resistant weatherproof covers.

This portable spider box uses a 50-amp, 125/250V CS6375 inlet for bringing power into the unit, while the outlet is a 50-amp, 125/250V CS6369 feed through for powering 125/250V tools and machines. The device supports one feed through receptacle for 125/250V equipment, one 30-amp 250V L6-30R receptacle, one 20-amp 250V L6-20R receptacle and four 20-amp 125V 5-20R twist-lock GFCI receptacles. GFI trip level is set to 4-6 mA with a maximum trip time of 25 mS. The MPD-CS2-CS-SZ0SZ-ZZ-1.C04-1.L09.L08-4.N10-M1 spider box features short circuit, overload, open neutral and reverse phasing protection. Should circuit overload occur, the unit will automatically shut down to protect the spider box from damage.

The housing on the MPD-CS2-CS-SZ0SZ-ZZ-1.C04-1.L09.L08-4.N10-M1 is constructed of 16-gauge steel with a NEMA 3R enclosure rating. This device is approved for wet locations and features heavy-duty impact/flame resistant weatherproof covers. Two angled legs at the base of the unit and low center of gravity ensures this spider box does not tip over in the field.

Certification: Larson Electronics is a UL 1640 panel shop and certified to build portable power distribution systems. All units are built in accordance to NFPA 70 (National Electric Code). All equipment is NEMA 3R rated for indoor and outdoor use and provide a degree of protection against dirt, water, and ice. NEMA 4 and NEMA 4x equipment can be equipped upon request.

Applications: Indoor or outdoor applications including but not limited to, construction sites, plant maintenance, plant turnarounds, shows, exhibits and shipyard operations. These units are popularly used in applications where external power sources are often necessary. We also offer class rated transformers for use within explosion proof and hazardous location environments.

Larson Electronics is a manufacturer and we can build portable power distribution systems to your specifications. Although we carry several models of portable power distribution systems in stock, we can deliver custom ordered units almost as quickly as our prebuilt units. If this model does not meet your needs, please contact us at 1-800-369-6671 or sales@larsonelectronics.com to discuss your specific requirements.

REV	DESCRIPTION	DATE
A	QUOTE	10/22/2026

MPD-CS1-CS.50AF-SZ0-Z-1.C04-1.L09-1.L08-4.N10-M1

LARSON ELECTRONICS®

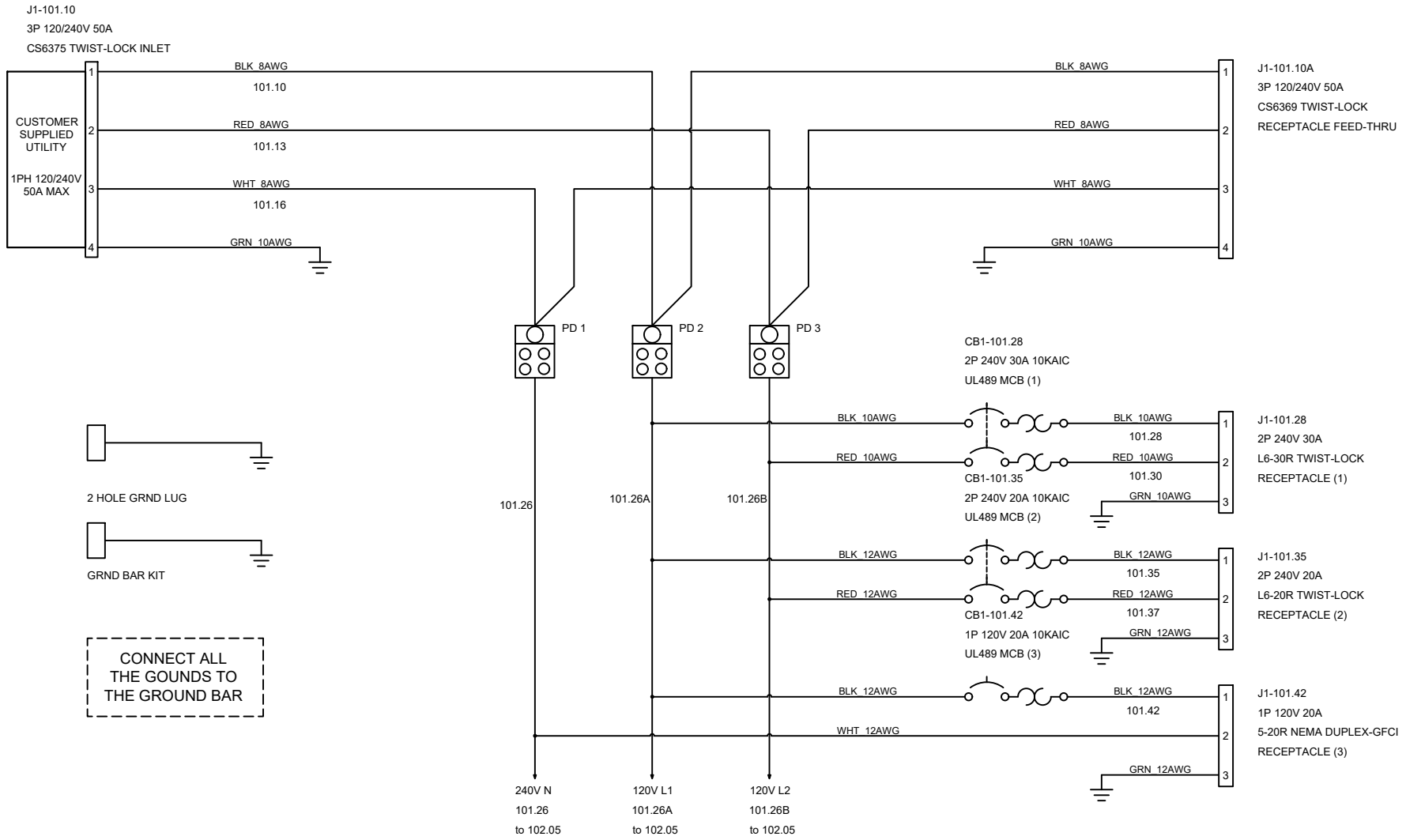

LARSON ELECTRONICS
9419 E US HWY 175,
KEMP, TX 75143

TITLE			
MPD-CS1-CS.50AF-SZ0-Z-1.C04-1.L09-1.L08-4.N10-M1			
DRAWN BY	DATE	REV	
L.Calib	10-22-2026	A	
CHECKED BY	SHEET #	DRAWING #	
	1 OF 2	101	

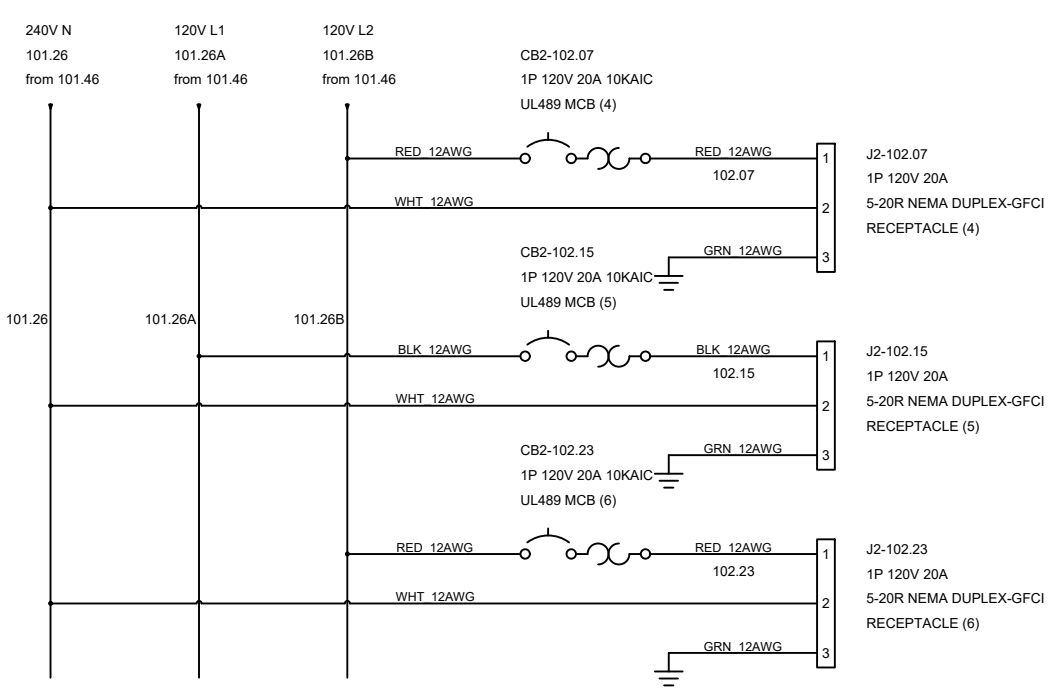

TAGS	QTY	CATALOG	DESCRIPTION
J1-101.10A	1	UNV00008818	CS6369 50A 250V 3P RECEPTACLE
J1-101.35	1	UNV00007125	2P 250V 20A L6-20R LOCKING RECEPTACLE
J1-101.28	1	UNV00016830	L6-30R COVER AND RECEPTACLE
2 HOLE GRND LUG	1	UNV00007136	2 HOLE GROUND LUG
J1-101.42 J2-102.07 J2-102.15 J2-102.23	4	UNV00014533	5-20R 1P 20A 125V GFCI RECEPTACLE
J1-101.10	1	UNV00013600	3P 4W 50A 125/250V LOCK RING CS6375 FLANGED INLET
CB1-101.42 CB2-102.07 CB2-102.15 CB2-102.23	4	UNV00017491	1P 125V 20A 10KA UL489 DIN RAIL MOUNT BREAKER
CB1-101.28	1	UNV00017628	2P 240V 30A UL489 CIRCUIT BREAKER
CB1-101.35	1	UNV00017853	2P 250V 20A UL489 DIN RAIL CIRCUIT BREAKER
PD 1 PD 2 PD 3	3	UNV00015084	POWER DISTRIBUTION BLOCK 175 A 600V 1-4 OPENING
GRND BAR KIT	1	UNV00013942C	GROUND BAR KIT

LARSON ELECTRONICS
9419 E US HWY 175,
KEMP, TX 75143

TITLE			
MPD-CS1-CS.50AF-SZ0-Z-1.C04-1.L09-1.L08-4.N10-M1			
DRAWN BY	L.Calib	DATE	10-22-2026
REV	A		
CHECKED BY		SHEET #	2 OF 2
DRAWING #	102		

Larson Electronics LLC
9419 E US HWY 175, Kemp, TX 75143
Phone: 800.369.6671

www.LarsonElectronics.com
Email: sales@LarsonElectronics.com
Fax: 903.765.7664



Larson Electronics LLC
9419 E US HWY 175, Kemp, TX 75143
Phone: 800.369.6671

www.LarsonElectronics.com
Email: sales@LarsonElectronics.com
Fax: 903.765.7664



Larson Electronics LLC
9419 E US HWY 175, Kemp, TX 75143
Phone: 800.369.6671

www.LarsonElectronics.com
Email: sales@LarsonElectronics.com
Fax: 903.765.7664

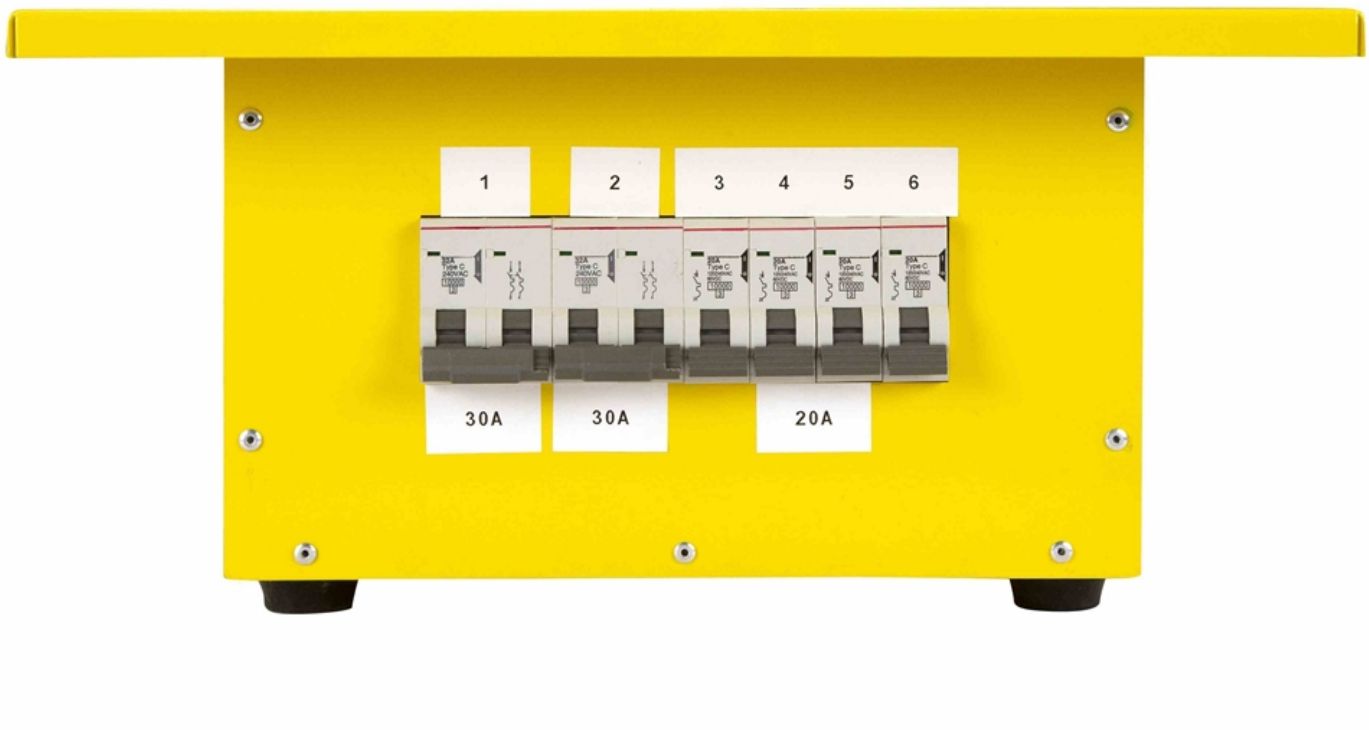

Larson Electronics LLC
9419 E US HWY 175, Kemp, TX 75143
Phone: 800.369.6671

www.LarsonElectronics.com
Email: sales@LarsonElectronics.com
Fax: 903.765.7664



Larson Electronics LLC
9419 E US HWY 175, Kemp, TX 75143
Phone: 800.369.6671

www.LarsonElectronics.com
Email: sales@LarsonElectronics.com
Fax: 903.765.7664

Frequently Asked Questions (FAQ)

There are no Faqs