Larson Electronics LLC
9419 E US HWY 175, Kemp, TX 75143
Phone: 800.369.6671

www.LarsonElectronics.com
Email: sales@LarsonElectronics.com
Fax: 903.498.3364

SPLT-1.2K-400AL-ISDG-BC-R1

Portable Solar Trailer - 7.5' Trailer - (4) Panels, Batteries/BC - Backup Generator

Product ID: 281156



Larson Electronics LLC manufactures a wide variety of products, including custom built to spec designs. The pictures displayed for this unit are a general representation of form factor for the product line and may not accurately represent this exact configuration in every detail due to custom builds and changes between similar products in our standard catalog. The specifics for this configuration are listed in the specification table and supporting documentation (CAD files, Dimensional Drawing, Name Plate Diagram, Wiring Diagram, etc.). This means that specific details (receptacles, plugs, wires, connections, mounting brackets, external finishes, etc.) may not be accurately represented in images vs specifications. Please review specifications and do not order based solely on images.

SPLT-1.2K-400AL-ISDG-BC-R1 Trailer Mounted Solar System

Solar Specs

Panes: (4) 300 Watt panels
Method of Deployment: Slider
System Voltage: 24 Volts
Battery Bank: (10) 40aH Lithium Iron Phosphate Batteries
Battery Capacity: 400aH Total / 400aH Usable

Quick Summary

Trailer Lighting Complies w/ DOT Regulations
(4) Solar Panels
Backup Generator
Battery Charger

Backup Generator Specs

Fuel Type: Diesel
Capacity: 5 kW
Auto Start: At Low Battery Levels
Battery Charger: Included
Battery Charger Connection: Generator

Trailer Specs

Materials: Steel
Trailer Dimensions: 7.5`L` x 7`W Trailer Bed - 10.75` Total Length
Hitch: 2" Ball Coupler
Wiring: 7-Pin Flat
Axle: 3,500lb
Suspension: 3,500 Lb 4-Leaf Double Eye Springs
Leveling Jacks: (4) 1,000 Manual Crank Leveling Jacks
Wheels: (2) 15" 5x4.5 Steel Rims

Tires: ST205/75/D15 H188
Weight: +-600 lbs
Shipping: Common Freight
Shipping Dimensions: 8`-L x 8`-W x 12`-H
Shipping Weight: +-600 lbs
Options: Length- Mounting-Fixtures/ Call Us for Special Requirements

Special Orders - Special Requirements
Contact us for special requirements
Toll Free: 1-800-369-6671
Intl: 1-903-270-1187
Fax: 1-903-498-3364
E-mail: sales@larsonelectronics.com

Made in the USA
The Larson Electronics SPLT-1.2K-400AL-ISDG-BC-R1 Portable Solar Trailer provides a safe and effective way for operators to power equipment in remote, outdoor locations. This solar unit features four 300-watt solar panels, 400 aH capacity battery bank, battery charger and 5 kW backup generator. The entire assembly is mounted onto a 7.5` trailer, allowing operators to transport this solar system from location to location.
PLEASE NOTE: ANY FREE SHIPPING OFFERS DO NOT APPLY TO LIGHT MASTS OR LIGHT TOWERS
The SPLT-1.2K-400AL-ISDG-BC-R1 is a temporary solar-powered system for outdoor and remote locations. This unit consists of four 300-watt solar panels, lithium iron phosphate battery bank, backup diesel generator and battery charger. All components are mounted on a single-axle trailer. This system does not come with monitoring plans.
Operation:

- (4) 300W solar panels
- (10) 40aH lithium iron phosphate batteries - 400aH total battery bank/400aH usable
- Battery charger
- Backup diesel generator
- All system components secured to a DOT-approved trailer
- Trailer comes with (4) leveling jacks and vin#

PA System: This unit does not have a PA system. We can add a one-way or two-way system upon request and with additional costs.
Router/Wireless 4G Hotspot: The system does not have a router. We can add a router for wireless connectivity at an additional cost.
GPS Tracking: The SPLT-1.2K-400AL-ISDG-BC-R1 is not equipped with GPS tracking. We can add the feature at an additional cost.
LED Strobe: The SPLT-1.2K-400AL-ISDG-BC-R1 does not come with a security LED strobe light. We can add a blue, red or white LED strobe light at an additional cost (combination of colors is also possible).



Click Photo to Enlarge

Solar Panel Assembly: This unit has four 300-watt solar panels, generating a total maximum output of 1.2 KW. The panels are mounted securely on a sliding assembly. During deployment, the top solar panels slide out to form a four-panel array for maximum exposure to sunlight. The panels are wired to the solar charger control box which manages the charging system. When in use, the four solar panels are angled at 45° to capture the intensity of the sun for optimized light intake.
Batteries: The solar unit contains a battery bank that consists of ten, 40 aH lithium iron phosphate batteries for a 400 aH battery bank (400 aH usable).

Compared to conventional SLA batteries, these units are 100% usable and lighter in weight. Over time, this results in lower operating and maintenance costs. An included battery level indicator that provides real-time power monitoring for the battery bank.

Battery Charger: This system comes with a battery charger, which can be plugged into a local wall outlet during use, such as prior to deployment or when local power is available at the remote site. We can add a 220V or 240V battery charger to power additional equipment from the solar trailer at an additional cost (portable battery chargers are also available).

Inverter: This unit does not come with an inverter. We can add an inverter to power additional equipment from the solar trailer at an additional cost.

Backup Generator: A 5 kW diesel generator is available on the system, which serves as backup power when sunlight is insufficient. We offer models with LPG/LNG or gas backup gensets (may come with additional costs). An auto start feature automatically activates the backup generator when the battery bank reaches below 30% capacity. For systems with battery chargers and backup generators, the battery charger is connected to the genset by default. It is possible to unplug the battery charger from the generator for local charging.

Component Control Center: All the electrical components are encapsulated in a NEMA 3R job box that is bolted to the trailer. Since most of these components are not rated for high heat, our component cooling system circulates air within the job box at 1400 CFM when the ambient temperature exceeds 90 degrees Fahrenheit. The job box that contains the component control system includes locks for security purposes.

Trailer Assembly: The entire assembly is mounted to a 7.5` by 7`, single axle trailer via six 1/2" anchor bolts. The two wheel trailer is equipped with 3,500 lbs axle and leaf springs with 15" trailer tires. A standard 2" ball coupling, two standard safety chains, and 7-pin flat trailer plug allow for easy hookup and towing. The trailer tongue can be removed for long term deployment. A rugged and waterproof job box is included, safely secured to the trailer. All trailer lighting complies with DOT/FMVSS regulations.

Outriggers vs Leveling Jacks: The solar-powered system features manual-crank leveling jacks. Outriggers help expand the surface area for large equipment or loads. This differs from leveling jacks that are used to stabilize or level systems. Leveling jacks can be mounted to outrigger legs (or the side of the trailer).

Applications: Live events, law enforcement, military, commercial, industrial facilities, remote locations and more.

At Larson Electronics, we do more than meet your lighting needs. We also provide replacement, retrofit, and upgrade parts as well as industrial grade power accessories. Our craftsmen can custom build any lighting system and/or accessories to fit the unique demands of your operation. A commitment to honesty, quality, and dependability has made Larson Electronics a leader in the lighting and electronics business since 1973. Contact us today at 800-369-6671 or message sales@larsonelectronics.com for more information about our custom options tailored to meet your specific industry needs.

REV	DESCRIPTION	DATE
A	PRODUCTION RELEASE	03/09/2022

SPLT-1.2K-400AL-ISDG-BC-R1

LARSON ELECTRONICS®

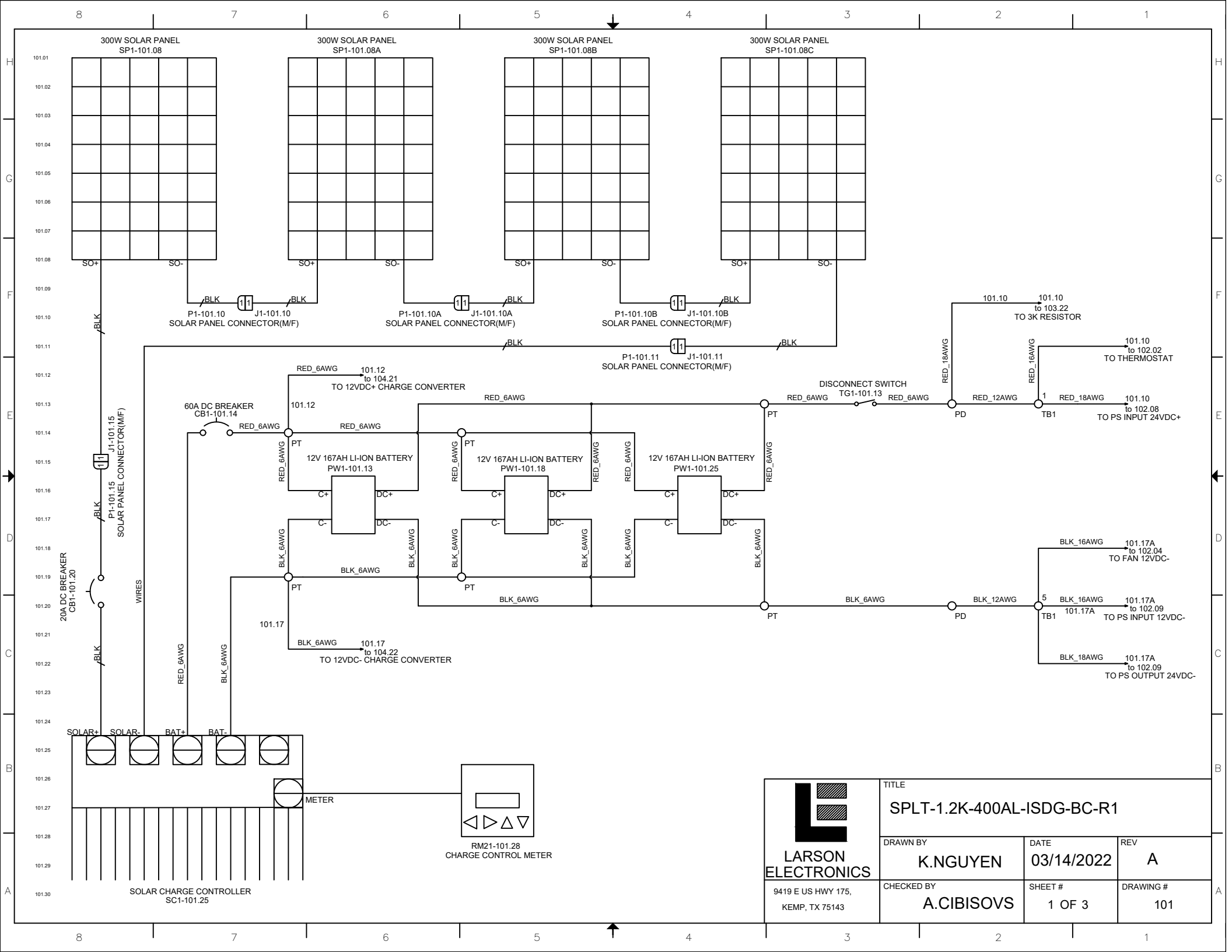

LARSON ELECTRONICS
9419 E US HWY 175,
KEMP, TX 75143

TITLE			
SPLT-1.2K-400AL-ISDG-BC-R1			
DRAWN BY	DATE	REV	
K.NGUYEN	03/14/2022	A	
CHECKED BY	SHEET #	DRAWING #	
A.CIBISOVS	1 OF 3	101	

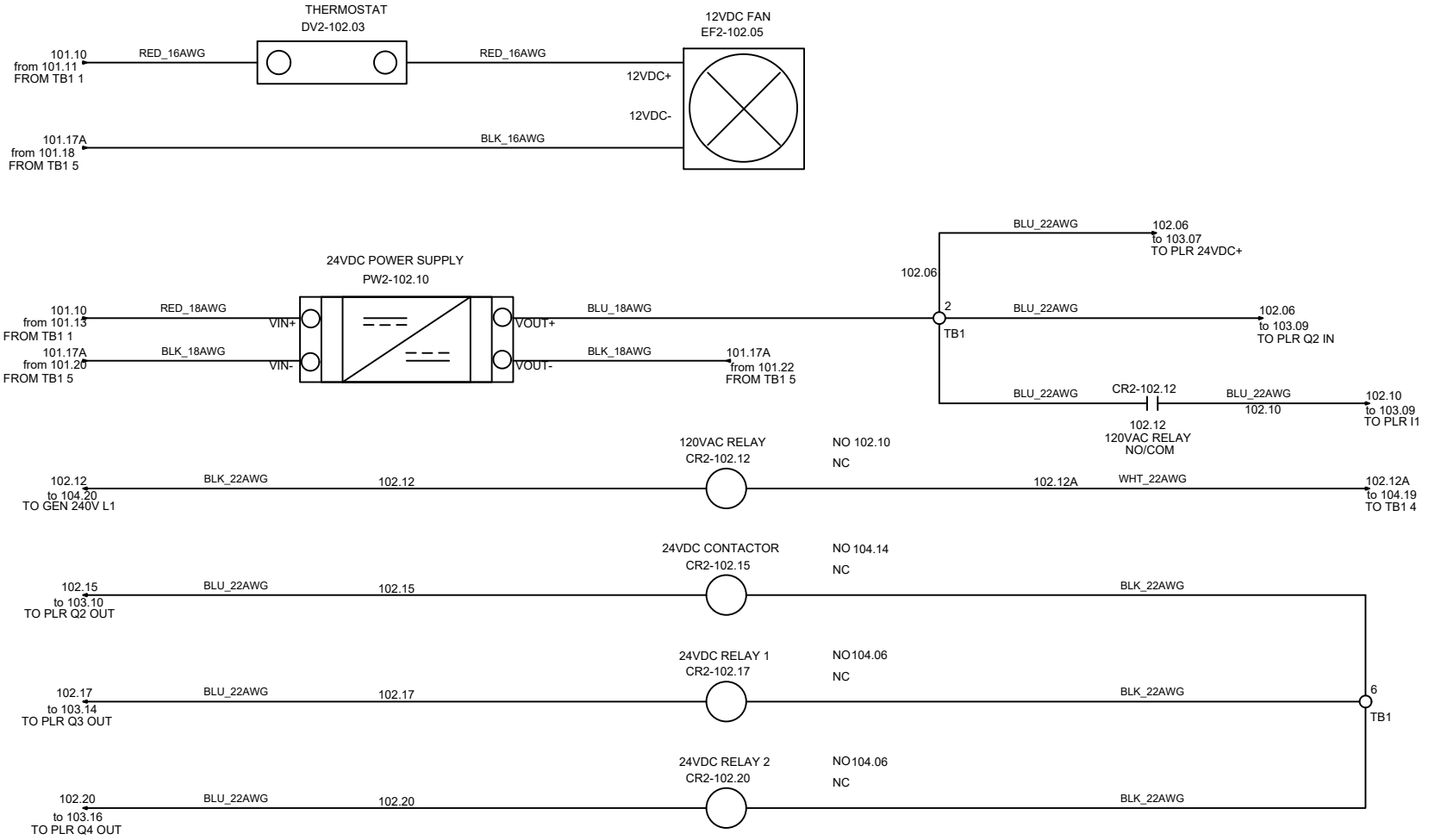

LARSON ELECTRONICS
9419 E US HWY 175,
KEMP, TX 75143

TITLE			
SPLT-1.2K-400AL-ISDG-BC-R1			
DRAWN BY	DATE	REV	
K.NGUYEN	03/14/2022	1	
CHECKED BY	SHEET #	DRAWING #	
A.CIBISOVS	2 OF 5	102	



LARSON ELECTRONICS
9419 E US HWY 175,
KEMP, TX 75143

TITLE			
SPLT-1.2K-400AL-ISDG-BC-R1			
DRAWN BY	DATE	REV	
K.NGUYEN	03/14/2022	A	
CHECKED BY	SHEET #	DRAWING #	
A.CIBISOVS	3 OF 5	103	

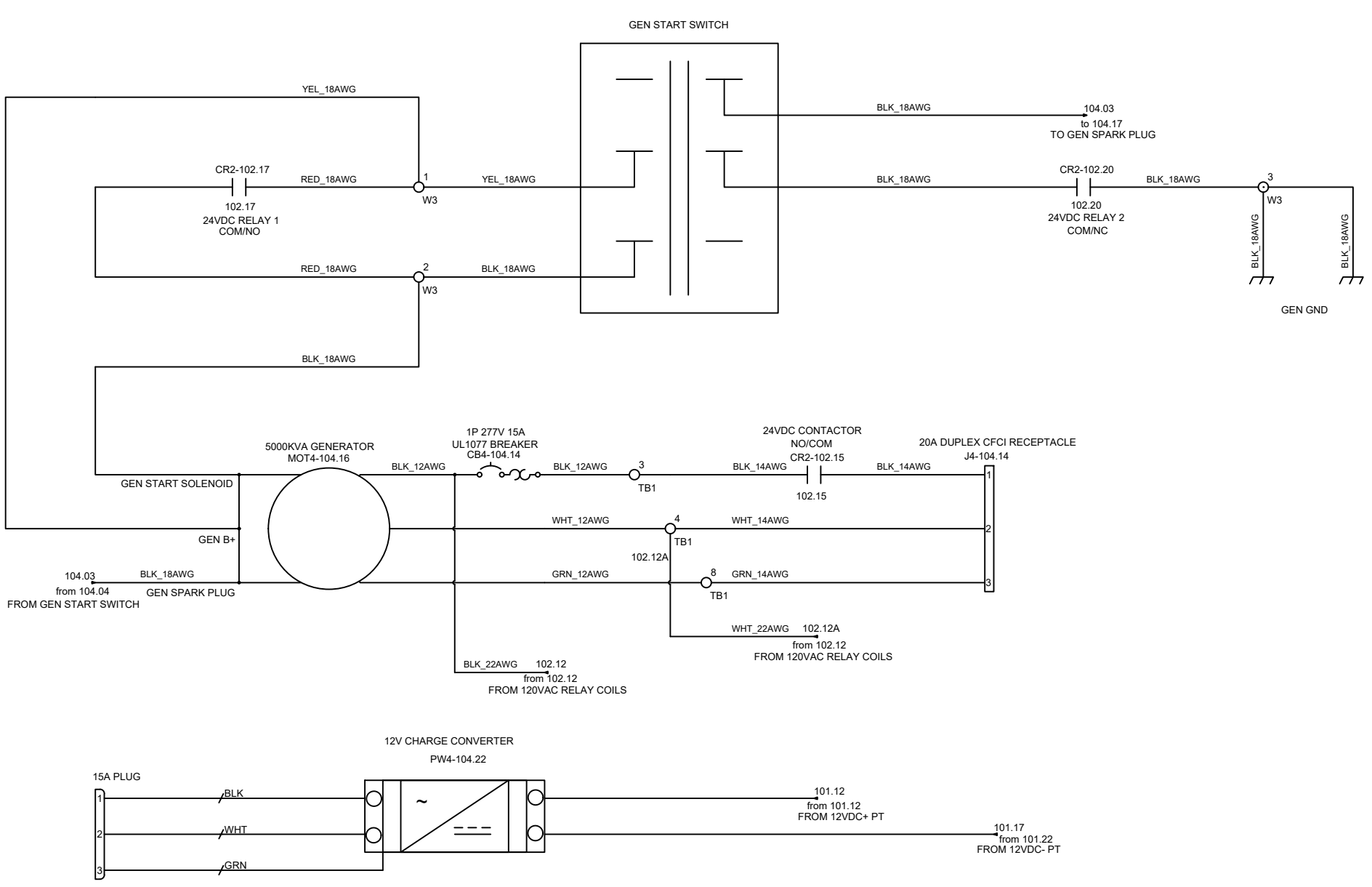

LARSON ELECTRONICS 9419 E US HWY 175, KEMP, TX 75143	TITLE: SPLT-1.2K-400AL-ISDG-BC-R1		
	DRAWN BY: K.NGUYEN	DATE: 03/14/2022	REV: A
	CHECKED BY: A.CIBISOVS	SHEET #: 4 OF 5	DRAWING #: 104

TB1													
Device1	Pin1	Wire1	Type1	T1	Number	T2	Manufacturer	Catalog	Type2	Wire2	Pin2	Device2	Jumper
DV2-102.03		101.10	RED_16AWG		1		PHOENIX CONTACT	UNV0001397 4	RED_12AWG	101.10	101.10	PD	
PW2-102.10	VIN+	101.10	RED_18AWG										
PLR3-103.16	VIN+	102.06	BLU_20AWG		2		PHOENIX CONTACT	UNV0001397 4	BLU_18AWG	102.06	VOUT+	PW2-102.10	
PLR3-103.16	Q2 IN	102.06	BLU_20AWG						BLU_20AWG	102.06		CR2-102.12	
CB4-104.14			BLK_12AWG		3		PHOENIX CONTACT	UNV0001397 4	BLK_14AWG			CR2-102.15	
CR2-102.12		102.12A	WHT_20AWG		4		UTILITY ELECTRICAL CO LD	UNV0001195 4	WHT_12AWG	102.12A		MOT4-104.16	
J4-104.14	2	102.12A	WHT_14AWG										
EF2-102.05		101.17A	BLK_16AWG		5		PHOENIX CONTACT	UNV0001397 5	BLK_12AWG	101.17A	101.17A	PD	
PW2-102.10	VIN-	101.17A	BLK_18AWG						BLK_18AWG	101.17A	VOUT-	PW2-102.10	
CR2-102.15			BLK_20AWG		6		PHOENIX CONTACT	UNV0001397 5	BLK_20AWG			CR2-102.17	
CR2-102.20			BLK_20AWG										
PLR3-103.16	VIN-		BLK_20AWG		7		PHOENIX CONTACT	UNV0001397 5	BLK_18AWG			R3-103.11	
MOT4-104.16			GRN_12AWG		8		PHOENIX CONTACT	UNV0001398 9	GRN_14AWG		3	J4-104.14	

LARSON ELECTRONICS
9419 E US HWY 175,
KEMP, TX 75143

TITLE			
SPLT-1.2K-400AL-ISDG-BC-R1			
DRAWN BY	DATE	REV	
K.NGUYEN	03/14/2022	A	
CHECKED BY	SHEET #	DRAWING #	
A.CIBISOVS	5 OF 6	105	

TAGS	QTY	CATALOG	DESCRIPTION
J4-104.14	1	UNV00002760	5-20R DUPLEX RECEPTACLE 125V 20A GFCI
P1-101.10 P1-101.10A P1-101.10B P1-101.11 P1-101.15	5	UNV00001349	SOLAR CONNECTOR MALE
J1-101.10 J1-101.10A J1-101.10B J1-101.11 J1-101.15	5	UNV00001350	SOLAR CONNECTOR FEMALE
CB1-101.20	1	UNV00001347	CIRCUIT BREAKER, 20A 150VDC, 1-POLE, DIN MOUNT,
CB1-101.14	1	UNV00001791	60AMP 12-48VDC BREAKER
CB4-104.14	1	UNV00015143	15A 1P 277 UL 1077 BREAKER
CR2-102.12	1	UNV00010791	GENERAL PURPOSE RELAYS9A MINI POWER SPDT-NO, 30A
CR2-102.17 CR2-102.20	2	UNV00009121	24VDC GENERAL PURPOSE RELAY SPDT
CR2-102.15	1	WDP30-1L-24	24VAC @ COILS CONTACTOR 32A SHUNT TRIP
EF2-102.05	1	UNV00015879	12VDC ELECTRIC COOLING FAN 1400CFM
RM21-101.28	1	UNV00001332	CHARGE CONTROL REMOTE DIGITAL METER
SC1-101.25	1	UNV00014371	TRISTAR 45A 12-48V SOLAR CHARGE CONTROLLER
SP1-101.08 SP1-101.08A SP1-101.08B SP1-101.08C	4	UNV00005453	300W SOLAR PANEL
PLR3-103.16	1	UNV00007648	24VDC PLR W/ ANALOG INPUT
DV2-102.03	1	UNV00009886	THERMOSTAT
MOT4-104.16	1	UNV00014160	5000KVA DIESEL POWERED GENERATOR
PW2-102.10	1	UNV00014102	CONVERTER 12-24VDC 8A
PW4-104.22	1	UNV00014437	55A CHARGER CONVERTER POWER SUPPLY
PW1-101.13 PW1-101.18 PW1-101.25	3	UNV00011978	LITHIUM BATTERY 12V 176AH
R3-103.17	1	RESISTOR	3000 OHMS RESISTOR 1/4W
R3-103.11	1	RESISTOR	2800 OHMS RESISTOR 1/4W
TG1-101.13	1	UNV00014267	CONTROL SWITCH 300A 24VDC
PD	2	UNV00015084	POWER DISTRIBUTION BLOCK 175A 600V
TB1	3	UNV00013974	4 HOLE GREY TB
TB1	4	UNV00013975	4 HOLE BLUE TB
TB1	1	UNV00013976	RED JUMPER FOR 2 HOLE TERM BLOCK
TB1	1	UNV00013989	2 HOLE GREEN TB
PT	6	UNV00008883	3 HOLE POLARIS 4-14AWG
W3	3	UNV00011954	3 HOLE WAGO

LARSON ELECTRONICS
9419 E US HWY 175,
KEMP, TX 75143

TITLE: SPLT-1.2K-400AL-ISDG-BC-R1

DRAWN BY	DATE	REV
K.NGUYEN	03/14/2022	A
CHECKED BY	SHEET #	DRAWING #
A.CIBISOVS	6 OF 6	106








LARSON
ELECTRONICS

Frequently Asked Questions (FAQ)