Larson Electronics LLC
9419 E US HWY 175, Kemp, TX 75143
Phone: 800.369.6671

www.LarsonElectronics.com
Email: sales@LarsonElectronics.com
Fax: 903.498.3364

EPJ-CBA-TE-50

Explosion Proof Junction Box, 1/2" NPT Hubs, (1) Ports, Type E Conduit Body, Coated Aluminum, C1D1 C2D1

Product ID: 281037



Larson Electronics LLC manufactures a wide variety of products, including custom built to spec designs. The pictures displayed for this unit are a general representation of form factor for the product line and may not accurately represent this exact configuration in every detail due to custom builds and changes between similar products in our standard catalog. The specifics for this configuration are listed in the specification table and supporting documentation (CAD files, Dimensional Drawing, Name Plate Diagram, Wiring Diagram, etc.). This means that specific details (receptacles, plugs, wires, connections, mounting brackets, external finishes, etc.) may not be accurately represented in images vs specifications. Please review specifications and do not order based solely on images.

EPJ-CBA-TE-50 Explosion Proof Junction Box - Type E Conduit Body
Listing: NRTL Listed to United States & Canada Standards
Conduit Body Style: Type E
Dimensions: 4.17" L x 3.03" H
Cover Opening: 3.27" (83 mm)
Weight: 1.5 lbs
Volume: 15 cu. in.
Ports: (1) - Dead End Configuration
Material: Die cast Copper-free Aluminum
Finish: Electrostatic Powder Epoxy/Polyester Coating
Gasket: Neoprene O-ring
Ground Screw: Green, Included
Hub Size: 1/2" NPT Threaded

Ratings
Class I, Divisions 1 & 2, Groups B, C, D
Class II, Division 1, Groups E, F, G
Class II, Division 2, Groups F, G
Class III, Divisions 1 & 2
NEMA 3, 4 X, 7 (C, D), 9 (E, F, G)
NRTL Listed to UL 886
NRTL Listed to UL 1203
NRTL Listed to CAN/CSA-C22.2 No. 30

Special Orders - Special Requirements
Contact us for special requirements
Toll Free: 1-800-369-6671
Intl: 1-903-270-1187
Fax: 1-903-498-3364
E-mail: sales@larsonelectronics.com

The Larson Electronics EPJ-CBA-TE-50 Explosion Proof Junction Box is designed for use in Class I, II and III rated facilities. This Type E conduit body contains one, 1/2" NPT threaded hub and top-located nubs on the cover for easy access with tools. Constructed of die-cast copper-free aluminum, a durable powder coated finish helps the junction box withstand corrosive substances, moisture and exposure to debris. This junction box comes with a neoprene O-ring gasket and a green ground screw.
The EPJ-CBA-TE-50 provides protection for conduits and access to electrical

components in combustible locations. This single port unit offers 15 cubic inches of volume and takes on a dead end configuration. The cover opening measures 3.27" (83 mm) and features top-located nubs for unscrewing with tools. The junction box is constructed of die-cast copper-free aluminum with an electrostatic powder epoxy/polyester coating for resistance to corrosion and rugged elements. Equipped with a neoprene O-ring gasket, the unit comes with a green ground screw. This explosion proof device is rain-tight and suitable for use in wet locations.

Hubs: This NEMA rated unit has one, 1/2" NPT threaded hub.

Applications: Petroleum refineries, chemical and petrochemical plants, storage areas, and other processing facilities where hazardous substances are handled or stored.

At Larson Electronics, we do more than meet your lighting needs. We also provide replacement, retrofit, and upgrade parts as well as industrial grade power accessories. Our craftsmen can custom build any lighting system and/or accessories to fit the unique demands of your operation. A commitment to honesty, quality, and dependability has made Larson Electronics a leader in the lighting and electronics business since 1973. Contact us today at 800-369-6671 or message sales@larsonelectronics.com for more information about our custom options tailored to meet your specific industry needs.

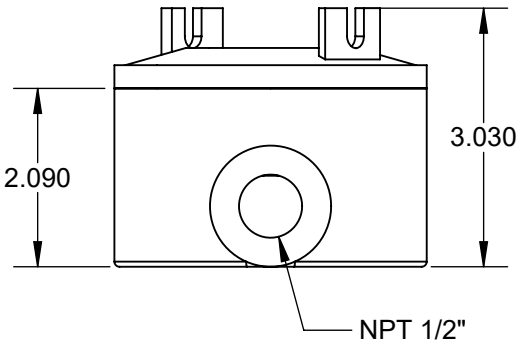

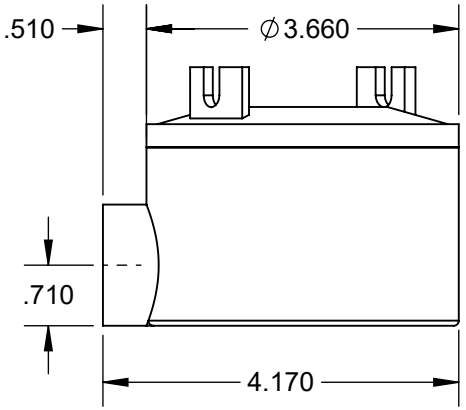

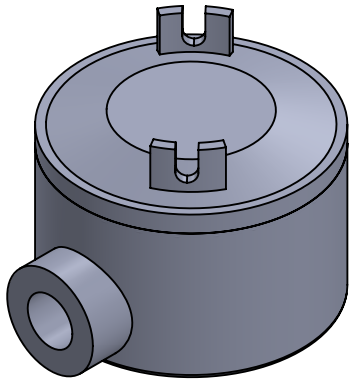

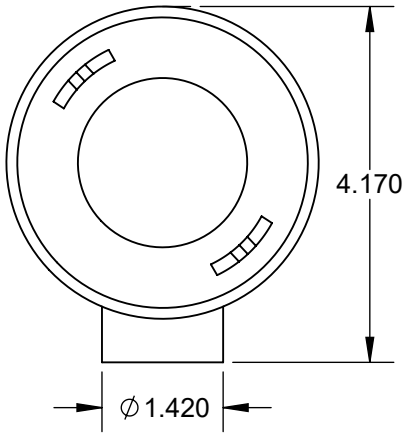

LARSON ELECTRONICS®

PART NUMBER:

EPJ-CBA-TE-50

SIZE		REV
A		1

DIMENSIONS ARE IN INCHES				
DO NOT SCALE DRAWING	DATE	5/10/2024	SCALE: NTS	SHEET 1 OF 1

PROPRIETARY AND CONFIDENTIAL

THE INFORMATION CONTAINED IN THIS DRAWING IS THE SOLE PROPERTY OF LARSON ELECTRONICS LLC. ANY REPRODUCTION IN PART OR AS A WHOLE WITHOUT THE WRITTEN PERMISSION OF LARSON ELECTRONICS LLC IS PROHIBITED.





Frequently Asked Questions (FAQ)