Larson Electronics LLC
9419 E US HWY 175, Kemp, TX 75143
Phone: 800.369.6671

www.LarsonElectronics.com
Email: sales@LarsonElectronics.com
Fax: 903.498.3364

ATRL-BLD-RND-TD-5L-CN-STRB-AMB

15W Round Dome Top LED Bollard Strobe Light - 120/277V AC - Amber Light Strobing Output - Wet Location Approved

Product ID: 280822



Larson Electronics LLC manufactures a wide variety of products, including custom built to spec designs. The pictures displayed for this unit are a general representation of form factor for the product line and may not accurately represent this exact configuration in every detail due to custom builds and changes between similar products in our standard catalog. The specifics for this configuration are listed in the specification table and supporting documentation (CAD files, Dimensional Drawing, Name Plate Diagram, Wiring Diagram, etc.). This means that specific details (receptacles, plugs, wires, connections, mounting brackets, external finishes, etc.) may not be accurately represented in images vs specifications. Please review specifications and do not order based solely on images.

ATRL-BLD-RND-TD-5L-CN-STRB-AMB Round Dome LED Strobing Bollard
Lamp Type: LED
Dimensions: 41-5/8"-H x 7"-Diameter
Weight: -
Voltage: 120-277 V AC @ 50/60 Hz
Total Watts: 15W
Lumens: 2,089 (Nominal) 1,384 (Delivered) @ 5000K
Luminous Efficacy: 92.26 Lm/W @ 5000K
Life Expectancy: 50,000+ hours
Light Color: Amber
Beam Angle: Cone
Color Rendering Index: 83 CRI
Operating Temp Range: -40ºC to +40ºC
Housing Material: Extruded Aluminum
Finish: Powder Coated Over Chromate Conversion Coating
Housing Color: Bronze, Black, or White
Lens Material: Clear Polycarbonate
Mount: Flush Surface Mounting With 8" Anchor Bolts

Ratings/Approvals
NRTL Listed for United States & Canada
Approved for Wet Locations
Electronic Driver
Round Curved Dome Bollard
Bright Strobe Pattern

Special Orders - Special Requirements
Contact us for special requirements

Toll Free: 1-800-369-6671
Intl: 1-903-270-1187
Fax: 1-903-498-3364
E-mail: sales@larsonelectronics.com

The ATRL-BLD-RND-TD-5L-CN-STRB-AMB from Larson Electronics is a Round Curved Dome Top Amber LED Strobing Bollard that is suitable for signaling and warning on outdoor walkways, steps, pathways, and parking lots. It also acts as physical protection and a visible barrier for vehicles. This IP65 rated round bollard delivers 1,384 lumens with a medium beam spread cone reflector. This aluminum vandal-resistant housed bollard features an electronic driver, which runs on 120-277 V AC

@ 50/60 Hz. This strobing bollard is listed for United States and Canada and approved for wet locations.

The ATRL-BLD-RND-TD-5L-CN-STRB-AMB produces 15 watts with a cone reflector that distributes the strobing light in an even downward spread and minimizes glare and light pollution, satisfying dark sky regulations. The addition of a clear polycarbonate lens helps this strobing LED bollard offer greater heat resistance, higher impact strength, and increased resistance to breakage. This durable strobing LED bollard operates on 120-277 V AC @ 50/60 Hz producing amber light which helps make environments appear brighter by significantly blocking blue light. This enhances contrast and depth perception which makes this bollard ideal for outdoors where overcast and foggy conditions may be present such as near bays and on beaches. Amber lighting is also great for wildlife-friendly applications because it does not scare away animals. The LED bulbs have a rated life span of 50,000 hours and a CRI of 83. For maximum control the bollard LED array includes an electronic driver, which is located in a sealed internal driver tray for security and easy maintenance.

This durable dome top bollard features housing constructed of extruded aluminum with a powder coating available in bronze, black, or white finishes, over a corrosion-resistant chromate conversion coating. The bollard has a flush mounting base and includes a mounting kit with 8" anchor bolts, which are drilled into the ground to secure the bollard down and provide vandal-resistance. It is IP65 rated, resistant to dust and protected against the corrosive effects of water jet wash-downs. The ATRL-BLD-RND-TD-5L-CN-STRB-AMB can operate in temperatures ranging from -40ºC to +40ºC.

Cone Reflectors: In cone-shaped reflectors the light source is located inside and beneath the cone. The light source is bounced off the top portion of the reflector, then projected outside of the cone in an outward but downward angle. This process helps to optimize the performance of the light by minimizing glare and light pollution while satisfying dark sky regulations which encourage the casting of little to no light upward in public areas.

LED Benefits: Unlike gas burning and arc type lamps that have glass bulbs, LEDs have no filaments or fragile housings to break during operation and/or transportation. Instead of heating a small filament or using a combination of gases to produce light, light emitting diodes (LEDs) use semi-conductive materials that illuminate when electric current is applied, providing instant illumination with no warm up or cool down time before re-striking. Because there is no warm up period, this light can be cycled on and off with no reduction in lamp life.

LED lights run at significantly cooler temperatures than traditional metal halide and high pressure sodium lights and contain no harmful gases, vapors, or mercury, making them both safer and more energy efficient. No extra energy is wasted in cooling enclosed work areas due to external heat emissions from bulb type lights, and the operator risks associated with traditional lighting methods, such as accidental burns and exposure to hazardous substances contained in the glass bulbs, are eliminated. In addition, LEDs are also safer for the environment as they are 100% recyclable, which eliminates the need for costly special disposal services required with traditional gas burning and arc type lamps.

Mounting: The ATRL-BLD-RND-TD-5L-CN-STRB-AMB includes a mounting kit with 8" vandal-resistant anchor bolts.

Applications: Warning and signaling bollard for parking lots, parking garages, walkways, buildings, perimeter lighting, commercial lighting, post lighting, directional lighting, outdoor illumination, upgrading (from CFLs to LEDs), background lighting, general area lighting, residential lighting, landscape lighting, and more.

At Larson Electronics, we do more than meet your lighting needs. We also provide replacement, retrofit, and upgrade parts as well as industrial grade power accessories. Our craftsmen can custom build any lighting system and/or accessories to fit the unique demands of your operation. A commitment to honesty, quality, and dependability has made Larson Electronics a leader in the lighting and electronics business since 1973. Contact us today at 800-369-6671 or message sales@larsonelectronics.com for more information about our custom

options tailored to meet your specific industry needs.

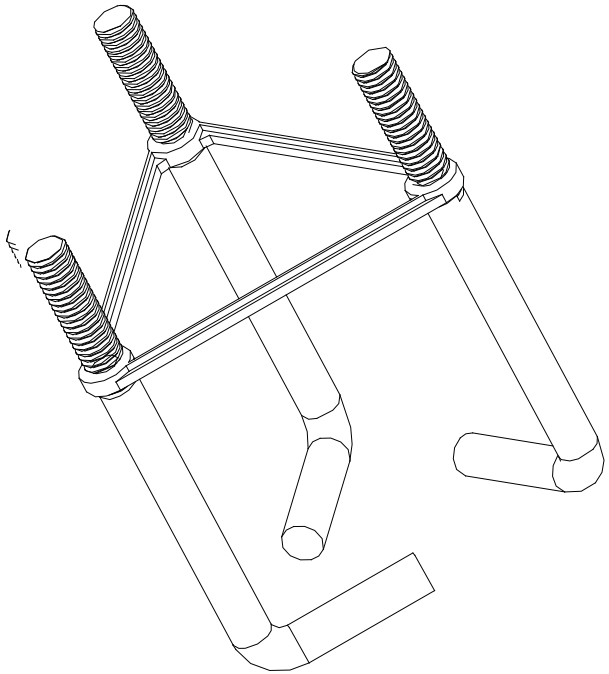

Standard Mounting Kit

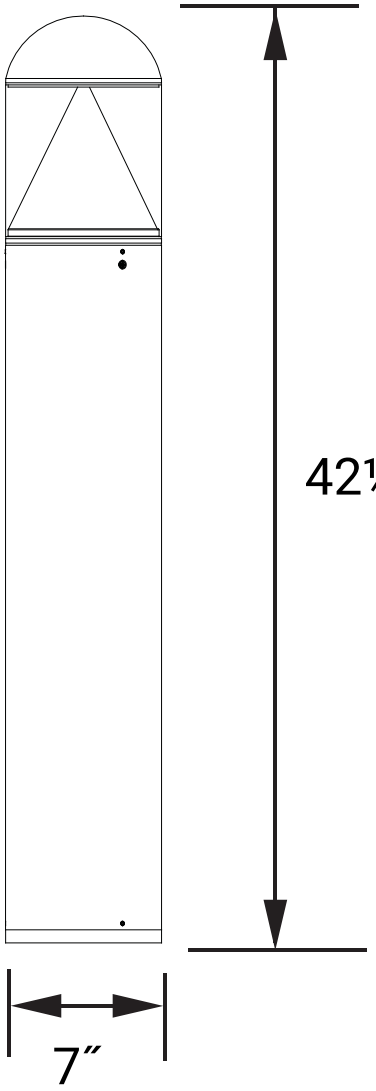

LARSON ELECTRONICS

TITLE:

ARTL-BLD-RND-TD-5L-CN

FINISH	Powder Coated		
			NAME
DIMENSIONS ARE IN INCHES - MM		DRAWN	CHRISTOPHER THAUER
MATERIAL		CHECKED	N/A
DO NOT SCALE DRAWING		DATE	9/7/2017

SIZE	DWG. NO.	REV
A		

SCALE: NTS | SHEET 1 OF 1

PROPRIETARY AND CONFIDENTIAL
THE INFORMATION CONTAINED IN THIS DRAWING IS THE SOLE PROPERTY OF LARSON ELECTRONICS LLC. ANY REPRODUCTION IN PART OR AS A WHOLE WITHOUT THE WRITTEN PERMISSION OF LARSON ELECTRONICS LLC IS PROHIBITED.

UNLESS OTHERWISE NOTED:

Angle	+/- .5 deg
.X	+/- .02
.XX	+/- .01
.XXX	+/- .005

5 4 3 2 1



Frequently Asked Questions (FAQ)