Larson Electronics LLC
9419 E US HWY 175, Kemp, TX 75143
Phone: 800.369.6671

www.LarsonElectronics.com
Email: sales@LarsonElectronics.com
Fax: 903.765.7664

EXP-MTSTR-DOL-3P-480V-30HP-40A

Explosion Proof Combination Motor Starter - Class I, II, III - 30HP, 480V Rated 3PH - NEMA 4, 4X

Product ID: 279825

Image: EXP-MTSTR-DOL-3P-480V-30HP-40A

Larson Electronics LLC manufactures a wide variety of products, including custom built to spec designs. The pictures displayed for this unit are a general representation of form factor for the product line and may not accurately represent this exact configuration in every detail due to custom builds and changes between similar products in our standard catalog. The specifics for this configuration are listed in the specification table and supporting documentation (CAD files, Dimensional Drawing, Name Plate Diagram, Wiring Diagram, etc.). This means that specific details (receptacles, plugs, wires, connections, mounting brackets, external finishes, etc.) may not be accurately represented in images vs specifications. Please review specifications and do not order based solely on images.

EXP-MTSTR-DOL-3P-480V-30HP-40A Explosion Proof Motor Starter

Unit Type: Explosion Proof Combination Motor Starter
Dimensions: 8.9"H x 5.775"W x 7.561"D
Weight: -
Capacity: 30 HP
Voltage: 480V Rated 50/60 Hz
Phase: 3PH
Coil Voltage: 240V 50Hz or 240V 60Hz (Rating Depends on Frequency)
FLA Rating: 20A to 60A
Disconnect Amp Trip: 100A
Reset Function: Manual or Automatic
Protection: Overload, Under Voltage, Phase Protection
Materials: Copper-free Aluminum, 316 SS (Hardware)
Mount: Wall or Surface
Hubs: 1.5" NPT, 3/4" NPT @ Top and Bottom; 1/2" NPT @ Drain Breather

Features/Ratings

Class I, Divisions 1&2, Groups B,C,D
Class I, Zones 1&2, Groups IIB,IIA
Class II, Divisions 1&2, Groups E,F,G
Class III, Divisions 1&2
NEMA 3, 4, 4X
Breaker Handle (Padlockable)
NEMA Starter Size 2

Special Orders - Special Requirements

Contact us for special requirements
Toll Free: 1-800-369-6671
Intl: 1-903-270-1187
Fax: 1-903-765-7664
E-mail: sales@larsonelectronics.com

The Larson Electronics EXP-MTSTR-DOL-3P-480V-30HP-40A Explosion Proof Combination Starter provides motor starting solutions for industrial equipment located in combustible environments. This 30 HP unit provides compatibility with 480V three-phase and is protected by a NEMA 4, 4X enclosure. The solid-state, explosion proof device features manual and automatic reset controls.

The EXP-MTSTR-DOL-3P-480V-30HP-40A can be used to start and preserve industrial motors in flammable facilities. This 30 HP unit is compatible with 480V three-phase 50/60 Hz.

The motor starter features a coil voltage of 110V 50Hz or 120 60Hz (rating depends on frequency) and a NEMA 2 starter size. Equipped with an FLA rating range of 20 amps to 60 amps, the explosion proof device features a 100-amp disconnect amp trip. Reset options include automatic or manual.

The explosion proof reduced voltage starter is protected by a NEMA 4, 4X rated enclosure. Cooling is provided by natural wind, making the unit suitable for both indoor and outdoor locations with adequate ventilation. The motor starter is housed in a copper-free aluminum enclosure with 316-grade stainless steel cover bolts. An accessible breaker handle can be padlocked in the ON or OFF position, in order to reduce tampering.

Mount: The EXP-MTSTR-DOL-3P-480V-30HP-40A can be securely mounted on walls or surfaces. This explosion proof unit contains 1.5" NPT and 3/4" NPT hubs located at the top and bottom of the enclosure. A 1/2" NPT hub is available for the drain breather.

Applications: Flammable environments, chemical processing, food manufacturing, industrial motors, overload protection, reduced voltage starter, equipment preservation, pumps, manufacturing belts, inrush control, power monitoring and more.

At Larson Electronics, we do more than meet your lighting needs. We also provide replacement, retrofit, and upgrade parts as well as industrial grade power accessories. Our craftsmen can custom build any lighting system and/or accessories to fit the unique demands of your operation. A commitment to honesty, quality, and dependability has made Larson Electronics a leader in the lighting and electronics business since 1973. Contact us today at 800-369-6671 or message sales@larsonelectronics.com for more information about our custom options tailored to meet your specific industry needs.

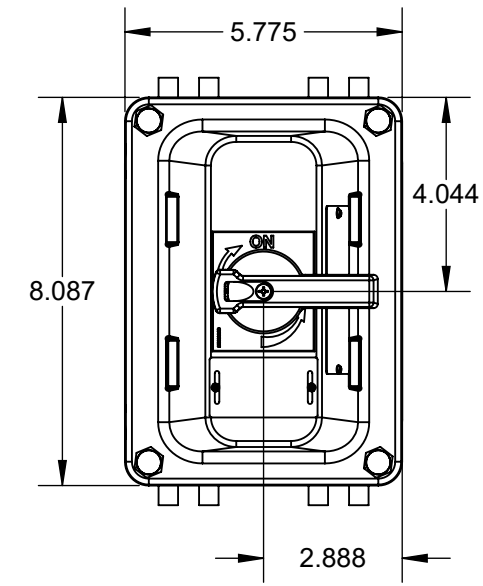

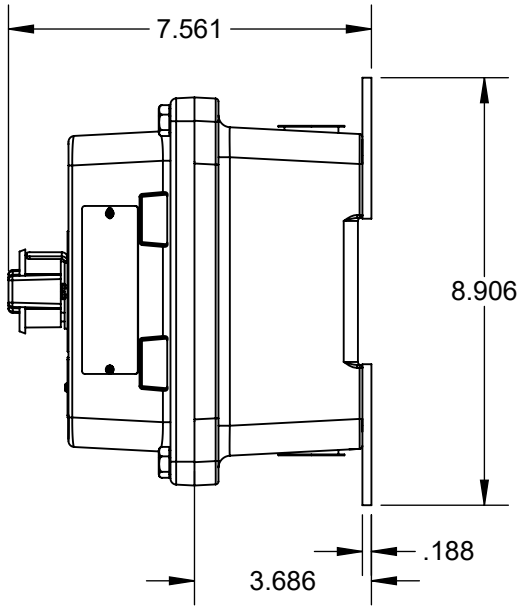

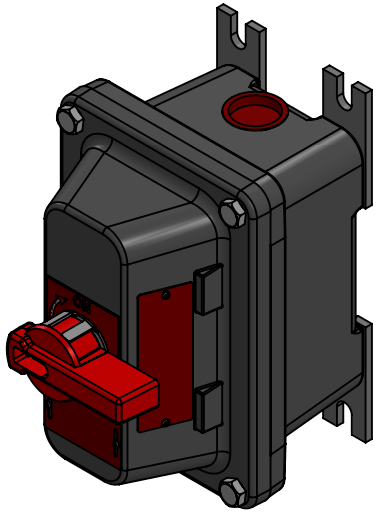

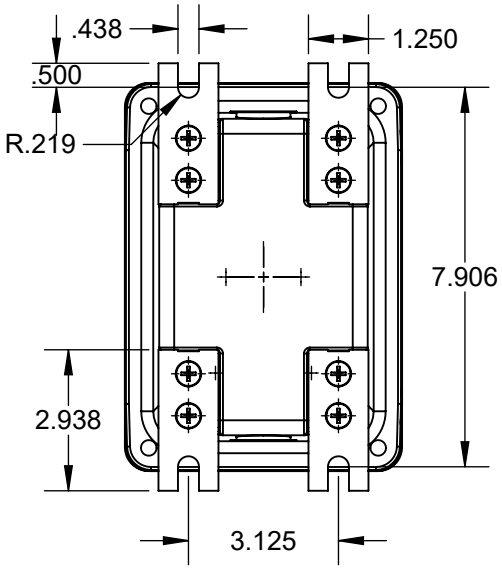

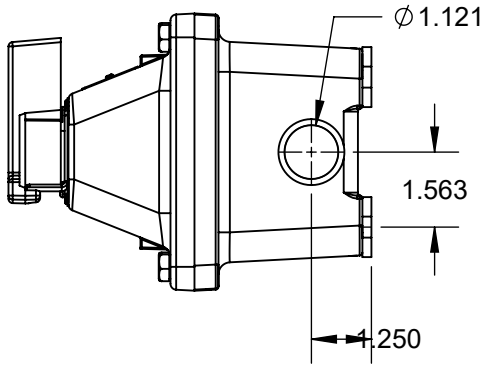

LARSON ELECTRONICS®

PART NUMBER:

EXP-MTSTR-DOL-3P-480V-30HP-40A

SIZE		REV
A		1

DIMENSIONS ARE IN INCHES				
DO NOT SCALE DRAWING	DATE	2/21/2025	SCALE: NTS	SHEET 1 OF 1

PROPRIETARY AND CONFIDENTIAL

THE INFORMATION CONTAINED IN THIS DRAWING IS THE SOLE PROPERTY OF LARSON ELECTRONICS LLC. ANY REPRODUCTION IN PART OR AS A WHOLE WITHOUT THE WRITTEN PERMISSION OF LARSON ELECTRONICS LLC IS PROHIBITED.

Larson Electronics LLC
9419 E US HWY 175, Kemp, TX 75143
Phone: 800.369.6671

www.LarsonElectronics.com
Email: sales@LarsonElectronics.com
Fax: 903.765.7664

Larson Electronics LLC
9419 E US HWY 175, Kemp, TX 75143
Phone: 800.369.6671

www.LarsonElectronics.com
Email: sales@LarsonElectronics.com
Fax: 903.765.7664

Larson Electronics LLC
9419 E US HWY 175, Kemp, TX 75143
Phone: 800.369.6671

www.LarsonElectronics.com
Email: sales@LarsonElectronics.com
Fax: 903.765.7664

Larson Electronics LLC
9419 E US HWY 175, Kemp, TX 75143
Phone: 800.369.6671

www.LarsonElectronics.com
Email: sales@LarsonElectronics.com
Fax: 903.765.7664

Larson Electronics LLC
9419 E US HWY 175, Kemp, TX 75143
Phone: 800.369.6671

www.LarsonElectronics.com
Email: sales@LarsonElectronics.com
Fax: 903.765.7664

Frequently Asked Questions (FAQ)

There are no Faqs