Larson Electronics LLC
9419 E US HWY 175, Kemp, TX 75143
Phone: 800.369.6671

www.LarsonElectronics.com
Email: sales@LarsonElectronics.com
Fax: 903.498.3364

EPL-TL-2XLE1-C-1227

Explosion Proof Two Color LED Light - C1D1/C2D1 Traffic Light - Signal Stack Light - ATEX Rated - 120-240V AC

Product ID: 278661



Larson Electronics LLC manufactures a wide variety of products, including custom built to spec designs. The pictures displayed for this unit are a general representation of form factor for the product line and may not accurately represent this exact configuration in every detail due to custom builds and changes between similar products in our standard catalog. The specifics for this configuration are listed in the specification table and supporting documentation (CAD files, Dimensional Drawing, Name Plate Diagram, Wiring Diagram, etc.). This means that specific details (receptacles, plugs, wires, connections, mounting brackets, external finishes, etc.) may not be accurately represented in images vs specifications. Please review specifications and do not order based solely on images.

EPL-TL-2XLE1-C-1227 Explosion Proof LED Traffic Light
Lamp Type: LED
Dimensions: 11"-L x 7.113"-W x 21.25"-H
Watts: 24W
Voltage:120-240 V AC
Lumens: 2,640 (1,320 lm per Lamp)
Luminous Efficacy: 110 Lm/W
LED Light Color: Green-Red, Red-White, Blue-White, Red-Amber or Blue-Green
LED Life Expectancy: 50,000 Hours
Lighting Configuration: Steady Burn, Strobe, or Strobe/Steady
Ambient Operating Temp Range: -40°C to +60°C
Housing Material: Aluminum
Lens Material: Polycarbonate
Mounting: Back Plate w/ Predrilled Aluminum Flat Surface Mounting Bracket
Wiring: 10' SOOW Cable w/ Flying Leads

Ratings/Approvals
NRTL Listed for United States, Canada, Europe, Asia
Class I, Div. 1 & 2, Groups A, B, C, D
Class I, Zones 1 & 2, Groups IIB+H2, IIA
Class II, Div. 1 & 2, Groups E, F ,G
Class III, Div. 1 & 2
NEMA Type 3, 4, 4X, 7 (B,C,D), 9 (E,F,G)
ATEX Ex II 2 G / D
IECEx db IIC Gb
IECEx tb IIC Db IP66

Special Orders - Special Requirements
Contact us for special requirements
Toll Free: 1-800-369-6671
Intl: 1-214-616-6180
Fax: 1-903-498-3364
E-mail: sales@larsonelectronics.com

Made in Texas

The EPL-TL-2XLE1-C-1227 from Larson Electronics is an Explosion Proof Two Color LED Light designed for illuminative signaling in flammable work sites. The ATEX-rated traffic light is equipped with two LED lamps with colored lenses, secured on a copper-free aluminum backplate. This 24-watt explosion proof system operates on 120-240 V AC.

The EPL-TL-2XLE1-C-1227 is a two-color LED signal light for combustible environments and ATEX-rated facilities. The explosion proof 24-watt unit consists

of two explosion proof LED lamps with colored lenses, which are mounted on an aluminum backplate. Each LED fixture produces 1,320 lumens of high-intensity LED light for illumination within hazardous areas and potentially explosive work environments. This explosion proof LED system operates on 120-240 V AC.
The standard lamp configuration is red and green LED lamps in a steady burn or strobing configuration. The EPL-TL-2XLE1-C-1227 is offered in the following color combinations: Green-Red, Red-White, Blue-White, Red-Amber or Blue-Green. We also offer a large assortment of lamp color options including red, green, blue, amber, purple, and white LED lamps. Please contact us for special lamp configurations. These stack lights can also be configured with audible horns.
Commonly used color codes for indicators:
- **Red:** Stop / Failure conditions, such as an emergency stop or machine fault
- **Yellow:** Caution / Warnings, such as over-temperature or over-pressure conditions
- **Green:** Go / Normal machine or process operation
- **Blue:** External help request / Operator/Supervisor required / Maintenance personnel assistance required
- **White:** User-defined conditions specific to application and environment

LED Benefits: Unlike gas burning and arc type lamps that have glass bulbs, LEDs have no filaments or fragile housings to break during operation and/or transportation. Instead of heating a small filament or using a combination of gases to produce light, light emitting diodes (LEDs) use semi-conductive materials that illuminate when electric current is applied, providing instant illumination with no warm up or cool down time before re-striking. Because there is no warm up period, this light can be cycled on and off with no reduction in lamp life.
LED lights run at significantly cooler temperatures than traditional metal halide and high pressure sodium lights and contain no harmful gases, vapors, or mercury, making them both safer and more energy efficient. No extra energy is wasted in cooling enclosed work areas due to external heat emissions from bulb type lights, and the operator risks associated with traditional lighting methods, such as accidental burns and exposure to hazardous substances contained in the glass bulbs, are eliminated. In addition, LEDs are also safer for the environment as they are 100% recyclable, which eliminates the need for costly special disposal services required with traditional gas burning and arc type lamps.
Heat Management: Heat is the single largest factor in premature LED failure and color shifting. These LED units contain advanced drivers which use pulse width modulation to control heat buildup rather than simple voltage regulators which are typically harsh on sensitive electronics and can contribute to early LED failure. These units automatically sense the temperature of each LED and adjust the energy frequency or "duty cycle" accordingly to maintain heat levels within acceptable ranges. This system in essence flashes current at an extremely fast on and off rate to each LED based upon the LED`s core temperature. This flash rate is too fast to detect with the human eye, but provides precise control of the current flowing to each LED and thus the heat it generates. This allows the LEDs to be driven at up to 100% capacity without overheating or visible loss of light output. The LEDs are always driven at the same voltage but the duty cycle, however, is changed to alter how long the LEDs are actually on or off. The end result is more light with less heat and longer LED life with an average 70% lumen maintenance after 50,000 hours.
Durability: The LED signal lamps are rated NEMA Type 3, 4, 4X, 7 (B,C,D) and 9 (E,F,G) and designed to withstand the rigors of demanding environmental and operating conditions while remaining lightweight and easy to use. The units can operate in temperatures of -40° Celsius to 60° Celsius, are waterproof to 3 meter and resist ingress of dust, dirt and humidity. The housings are formed from extruded aluminum and the lenses are unbreakable polycarbonate. The LEDs offer inherent LED resistance to shocks and vibrations.
Mounting/Wiring: Mounting is provided by a heavy gauge aluminum back plate fabricated from copper free aluminum with four predrilled holes designed to be bolted to walls, ceilings, and flat surfaces for permanent and secure attachment. The ATEX-rated LED traffic light comes with 10` of SOOW cable w/ flying leads for

completing electrical connections.
Applications: Flammable work sites, hazardous locations, safety lighting, traffic light, manufacturing facilities, chemical processing, signaling, warehouses, and more.
At Larson Electronics, we do more than meet your lighting needs. We also provide replacement, retrofit, and upgrade parts as well as industrial grade power accessories. Our craftsmen can custom build any lighting system and/or accessories to fit the unique demands of your operation. A commitment to honesty, quality, and dependability has made Larson Electronics a leader in the lighting and electronics business since 1973. Contact us today at 800-369-6671 or message sales@larsonelectronics.com for more information about our custom options tailored to meet your specific industry needs.

REV	DESCRIPTION	DATE
A	PRODUCTION RELEASE	4/17/2024

EPL-TL-2XLE1-C-1227-STB-GR

LARSON ELECTRONICS®

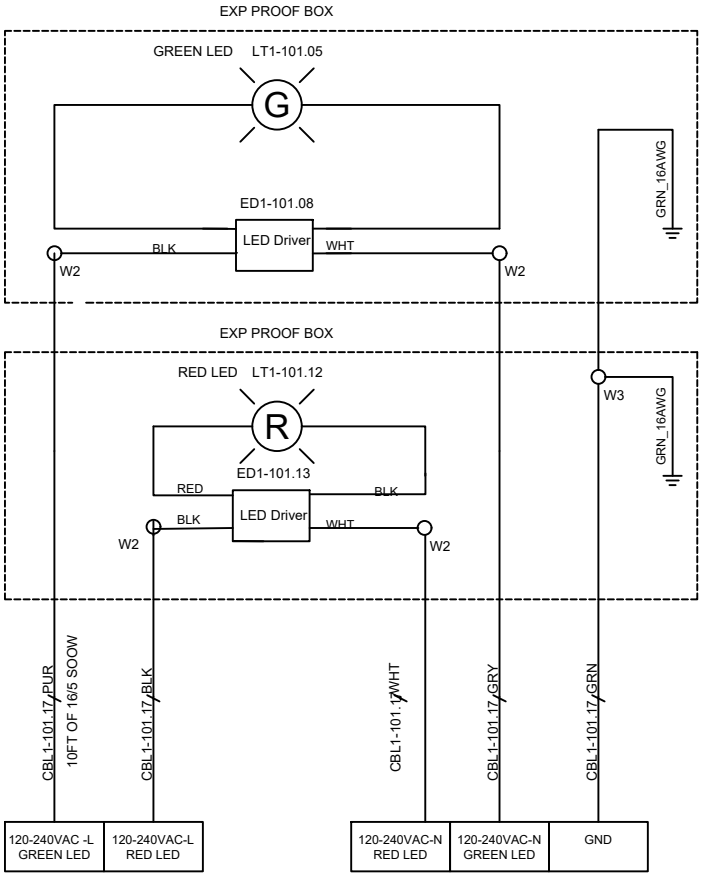

TAGS	QTY	CATALOG	DESCRIPTION
ED1-101.08 ED1-101.13	2	UNV00004244	26W LED DRIVER DIMMING 0-10..XXL-EMG-DCP-26W
LT1-101.07 LT1-101.12	2	UNV00004101	25W 9-32V SPOT LIGHT
W3	1	UNV00011954	3 HOLE WAGO
CBL1-101.17	10FT	UNV00005745	16/5 SOOW CABLE
W2	4	UNV00004254	2 HOLE WAGO

LARSON ELECTRONICS

9419 E US HWY 175,
KEMP, TX 75143

TITLE			
EPL-TL-2XLE1-C-1227-STB-GR			
DRAWN BY	DATE	REV	
A.HIRSH	4/17/2024	A	
CHECKED BY	SHEET #	DRAWING #	
J.Maldonado	1 OF 1	101	

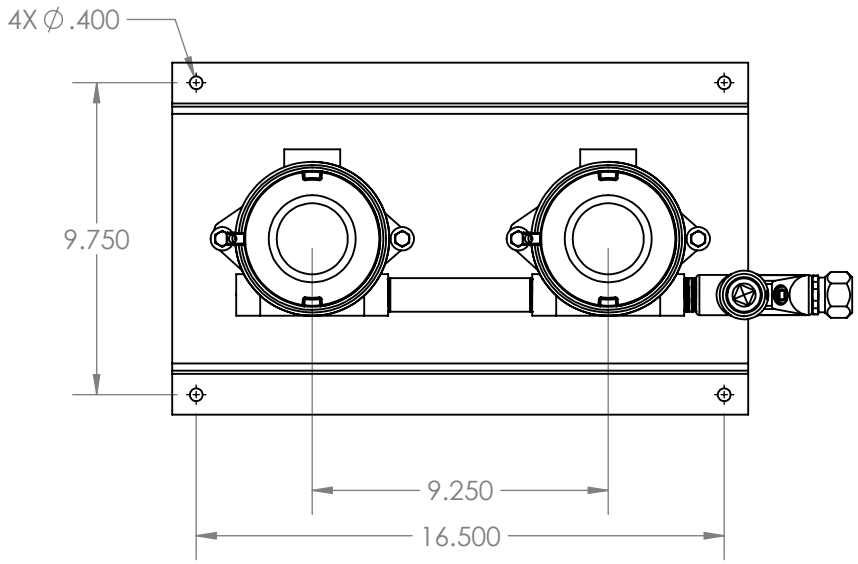

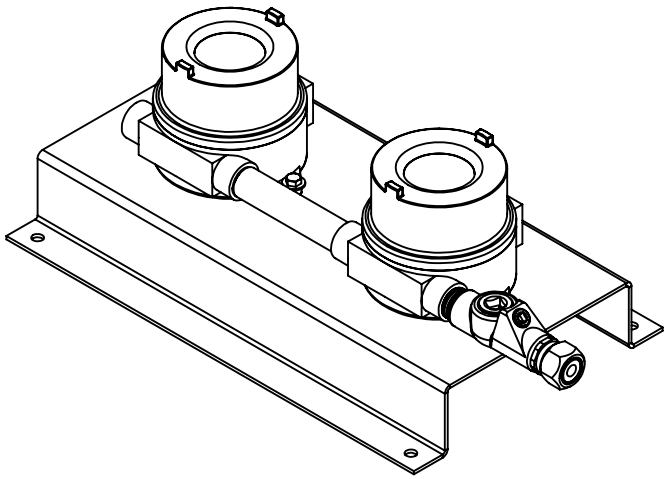

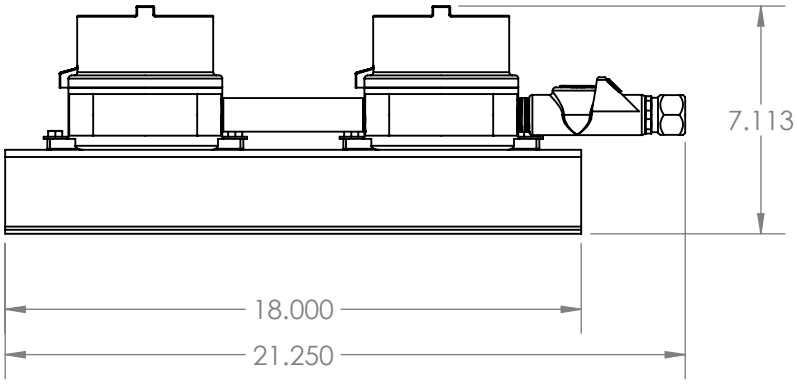

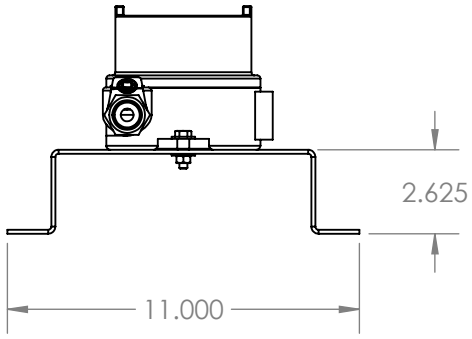

LARSON ELECTRONICS

TITLE:

EPL-TL-2XLE1-C-1227

PROPRIETARY AND CONFIDENTIAL
THE INFORMATION CONTAINED IN THIS DRAWING IS THE SOLE PROPERTY OF LARSON ELECTRONICS LLC. ANY REPRODUCTION IN PART OR AS A WHOLE WITHOUT THE WRITTEN PERMISSION OF LARSON ELECTRONICS LLC IS PROHIBITED.

UNLESS OTHERWISE NOTED:

Angle	+/- .5 deg
.X	+/- .02
.XX	+/- .01
.XXX	+/- .005

FINISH			
SURFACE AREA [sq. in]			NAME
DIMENSIONS ARE IN INCHES		DRAWN	CHRISTOPHER THAUER
MATERIAL		CHECKED	N/A
DO NOT SCALE DRAWING		DATE	12/14/2022

SIZE **A**	DWG. NO.	REV
SCALE: NTS		SHEET 1 OF 1


Serial
5047402
LARSON
ELECTRONICS
LARSONELECTRONICS.COM
877-474-2747

Frequently Asked Questions (FAQ)