Larson Electronics LLC
9419 E US HWY 175, Kemp, TX 75143
Phone: 800.369.6671

www.LarsonElectronics.com
Email: sales@LarsonElectronics.com
Fax: 903.765.7664

EPSLED-MJ-15W-LED-C-1224-PND

15W Explosion Proof Colored Strobe Light, C1D1, 12-24V AC/DC 50/60 Hz, 2,250 lms, Pendant Mount, Mason Jar / Jelly Jar Beacon

Product ID: 276689



Image: EPSLED-MJ-15W-LED-C-1224-PND

Larson Electronics LLC manufactures a wide variety of products, including custom built to spec designs. The pictures displayed for this unit are a general representation of form factor for the product line and may not accurately represent this exact configuration in every detail due to custom builds and changes between similar products in our standard catalog. The specifics for this configuration are listed in the specification table and supporting documentation (CAD files, Dimensional Drawing, Name Plate Diagram, Wiring Diagram, etc.). This means that specific details (receptacles, plugs, wires, connections, mounting brackets, external finishes, etc.) may not be accurately represented in images vs specifications. Please review specifications and do not order based solely on images.

EPSLED-MJ-15W-LED-C-1224-PND - Explosion Proof LED Beacon

Listing: NRTL Listed to United States, Canada
Lamp Technology: LED
Dimensions: 6.22"-OD x 12.3"-H
Weight: 10 lbs
Voltage: 11-25V AC/DC (Nominal 12V or 24V AC or DC)
Total Watts: 15W
Total Lumens: 2,250 lms
Luminous Efficacy: 150 Lm/w
Lamp Life: 75,000+ Hours
LED Color: Red, Green, Blue, Amber, Purple, White 5000K, White 4500K, White 4000K, White 3500K or White 3000K
Color Rendering Index: >80 CRI
Lamp Type: Integrated LED
Lamp Base: N/A
Replacement Lamp: -
Beam Angle: 360°
Lighting Configuration: Flood Pattern
NEMA Type (Lighting): 7H x 7V
IES Classification: Type VS
Longitudinal Classification: Very Short
Cutoff Classification: Non-Cutoff
CIE Type: Semi-Direct

Ratings/Approvals

Class I, Divisions 1 & 2, Groups C and D
Class II, Divisions 1 & 2, Groups E, F and G
Class III, Divisions 1 & 2
Certified to UL 844 Ed. 13
Certified to UL 1598
Certified to C22.2 No. 137 Rev 2009
Certified to C22.2 No. 250.0
Certified to C22.2 No. 30-M-1986 Rev 2012
IEC 60529 Tested

IP67 Rated Waterproof

LEL Approved
Replacement for Metal Halide, HPS, Mercury Vapor, Halogen, CFL and Incandescent Lamps
Pyramid Light Distribution
Field Serviceable

BUG Rating: B1-U4-G2

Power Efficiency: >95%

Power Factor: 0.959

Amps: 1.25A @ 12V, 0.625A @ 24V

Ambient Operating Temp Range: -50°C to +65°C

Operating Temp Rating: T5

Housing Material: Copper Free Cast Aluminum (non sparking)
Housing Finish: Epoxy Powder Coated - Gray
Lens Material: Hardened Borosilicate Glass-
Gasket Material: Silicone
Mounting: Pendant Mount - Other Mounts Available
Wiring: Internal Wiring Junction Box
Wiring Hub: (1) 3/4" NPT

Special Orders - Special Requirements
Contact us for special requirements
Toll Free: 1-800-369-6671
Intl: 1-903-270-1187
Fax: 1-903-765-7664
E-mail:sales@larsonelectronics.com

The Larson Electronics EPSLED-MJ-15W-LED-C-1224-PND Explosion Proof LED Strobe Light Beacon provides operators with a powerful warning or signaling solution in hazardous locations and rugged environments. This 15-watt LED unit offers 2,250 lumens, carries an IP67 waterproof rating and is available in a variety of lamp colors. Compatible with pendant mounting installations, the mason jar style fixture is field serviceable and features pyramid light distribution that closely resembles traditional bulbs.

The EPSLED-MJ-15W-LED-C-1224-PND is a Class I, Division 1 & 2 and Class II, Division 1 & 2 explosion proof strobe light that is designed for energy efficient and superior signaling in combustible environments. This 15-watt mason jar style fixture offers 2,250 lumens of high quality light. Color options for the LED light includes: red, green, blue, amber, purple, white 5000K, white 4500K, white 4000K, white 3500K or white 3000K. This compact fixture is a suitable replacement for metal halide, high pressure sodium, mercury vapor, halogen, CFL and incandescent lights. The LED unit features a pyramid configuration to ensure complete light distribution that closely represents light output of traditional bulbs (unlike other LED lights that utilize a flat board causing light to be pushed directly downwards). This solution promotes vertical lighting and reduces the limitations associated with directional lighting. We can add a metal reflector at an additional cost.

This lighting solution for explosive sites is IP67 rated, dust-proof and protected against high pressure jets and temporary submersion. The non-sparking housing is specially designed to dissipate heat which increases the efficiency and lifespan of the LEDs and electronic components.

LED Benefits: Unlike gas burning and arc type lamps that have glass bulbs, LEDs have no filaments or fragile housings to break during operation and/or transportation. Instead of heating a small filament or using a combination of gases to produce light, light emitting diodes (LEDs) use semi-conductive materials that illuminate when electric current is applied, providing instant illumination with no warm up or cool down time before re-striking. Because there is no warm up period, this light can be cycled on and off with no reduction in lamp life.

LED lights run at significantly cooler temperatures than traditional metal halide and high pressure sodium lights and contain no harmful gases, vapors, or mercury, making them both safer and more energy efficient. No extra energy is wasted in cooling enclosed work areas due to external heat emissions from bulb type lights, and the operator risks associated with

traditional lighting methods, such as accidental burns and exposure to hazardous substances contained in the glass bulbs, are eliminated. In addition, LEDs are also safer for the environment as they are 100% recyclable, which eliminates the need for costly special disposal services required with traditional gas burning and arc type lamps.

LED Drivers: Even in LED fixtures, heat is the single largest factor in premature light failure and color shifting. As a result, many manufacturers reduce the output of their LEDs in order to reduce the amount of heat produced. Rather than lower light output or quality, Larson Electronics addresses this problem with the addition of an electronic LED driver. This internal driver provides the ability to automatically monitor and adjust input current to maintain the correct LED voltage levels regardless of input levels across a specific range. This not only reduces the energy dissipation, effectively lowering the operating temperature of the fixture, but also prevents AC over-voltage and short circuit loading making this fixture virtually maintenance free. Because the electronic driver allows the EPSLED-MJ-15W-LED-C-1224-PND to run at a cooler internal temperature and regulates the electrical current, energy efficiency and LED service hours are maximized while at the same time reducing operating costs and downtime incurred from the frequent servicing intervals required with other hotter running lights.

Field Serviceability: This explosion proof LED light is field serviceable. All major internal components can be purchased from Larson Electronics and installed by a licensed electrician with basic tools. With most explosion proof fixtures, the fixture must be returned to the manufacturer for repair work, which presents downtime and long turn around times for repair work. Larson Electronics addresses this issue with the EPL-MJ series with field serviceability, allowing operators to perform service work without having to return the fixture to the manufacturer in the event of damage or failure.

Voltage: This light is universal voltage capable and can be operated with 11-25V AC/DC (Nominal 12V or 24V) without modifications. This light is capable on operating on Direct Current (DC) or Alternating Current (AC). For alternating current, this light can operate on 50 Hz or 60 Hz. No modification are needed for changing between AC and DC. The intelligent internal driver is capable of sensing the incoming 12V or 24V input voltage and making internal adjustments to allow it to operate on the 11-25V voltage range, and operating on AC or DC current.

Mount: This explosion proof mason jar style LED light fixture comes standard with pendant mounting features, which cater to installations that hang from the ceiling. Several mounting options including wall, ceiling, angled wall, angled stanchion and top hat/pan adapter mounts for replacing existing light fixtures can be ordered separately.

Suggested Applications: Hazardous locations, aircraft maintenance, oil drilling rigs, refineries, solvent and cleaning areas, chemical manufacturing, waste treatment plants, gas processing plants and more.

At Larson Electronics, we do more than meet your lighting needs. We also provide replacement, retrofit, and upgrade parts as well as industrial grade power accessories. Our craftsmen can custom build any lighting system and/or accessories to fit the unique demands of your operation. A commitment to honesty, quality, and dependability has made Larson

Electronics a leader in the lighting and electronics business since 1973. Contact us today at 800-369-6671 or message sales@larsonelectronics.com for more information about our custom options tailored to meet your specific industry needs.

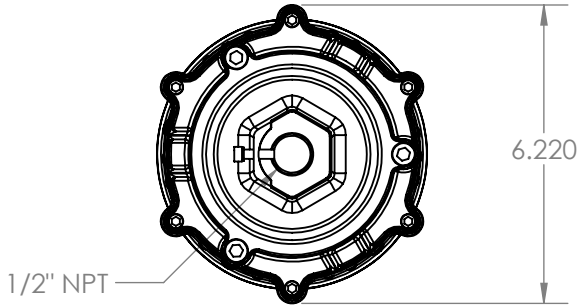

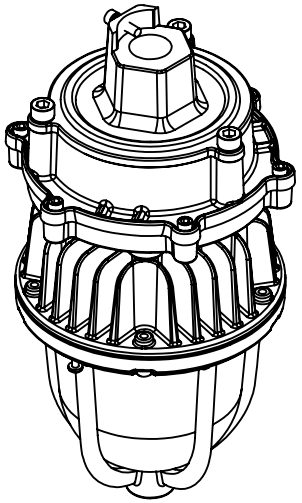

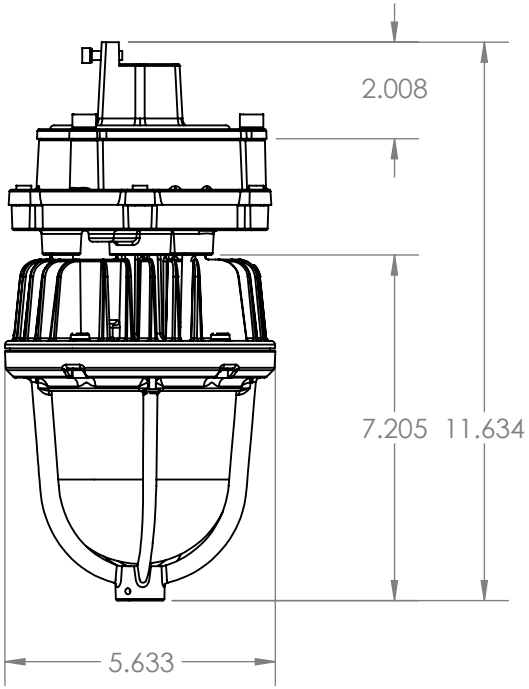

LARSON ELECTRONICS

TITLE:

EPSLED-MJ-15W-LED-C-1224-PND

FINISH			
SURFACE AREA [sq. in]			NAME
DIMENSIONS ARE IN INCHES		DRAWN	CHRISTOPHER THAUER
MATERIAL		CHECKED	N/A
DO NOT SCALE DRAWING		DATE	1/19/2023

SIZE	DWG. NO.	REV
A		

SCALE: NTS | SHEET 1 OF 1

PROPRIETARY AND CONFIDENTIAL
THE INFORMATION CONTAINED IN THIS DRAWING IS THE SOLE PROPERTY OF LARSON ELECTRONICS LLC. ANY REPRODUCTION IN PART OR AS A WHOLE WITHOUT THE WRITTEN PERMISSION OF LARSON ELECTRONICS LLC IS PROHIBITED.

UNLESS OTHERWISE NOTED:

Angle	+/- .5 deg
.X	+/- .02
.XX	+/- .01
.XXX	+/- .005

Larson Electronics LLC
9419 E US HWY 175, Kemp, TX 75143
Phone: 800.369.6671

www.LarsonElectronics.com
Email: sales@LarsonElectronics.com
Fax: 903.765.7664



Larson Electronics LLC
9419 E US HWY 175, Kemp, TX 75143
Phone: 800.369.6671

www.LarsonElectronics.com
Email: sales@LarsonElectronics.com
Fax: 903.765.7664

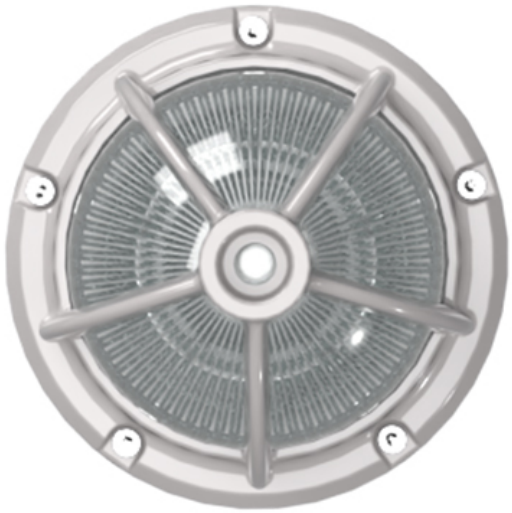

Larson Electronics LLC
9419 E US HWY 175, Kemp, TX 75143
Phone: 800.369.6671

www.LarsonElectronics.com
Email: sales@LarsonElectronics.com
Fax: 903.765.7664

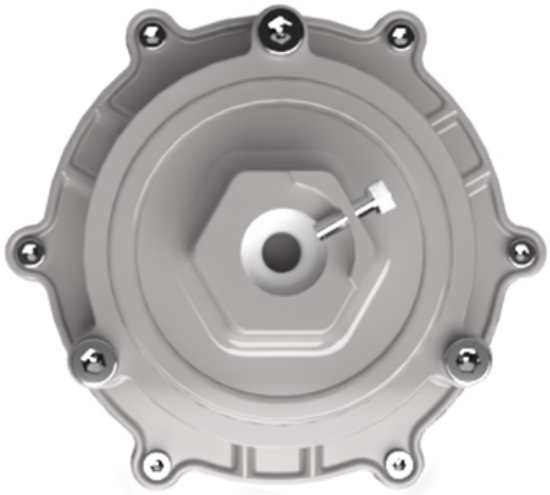

Larson Electronics LLC
9419 E US HWY 175, Kemp, TX 75143
Phone: 800.369.6671

www.LarsonElectronics.com
Email: sales@LarsonElectronics.com
Fax: 903.765.7664



Certification

Manufacturer: Larson Electronics LLC
Address: 9419 US-HWY 175
Kemp, Texas 75143

Declare the following equipment conforms to the standard(s) as listed:

Model: EPSLED-MJ-XXW-LED
Description: Explosion Proof LED Light

Evaluated Listings:

ETL: UL 844, UL 1598 – NEC / United States standards
ETL: CSA C22.2 No. 137, No. 250 – CEC / Canada standards

The EPSLED-MJ-XXW-LED is certified to NEC and CEC standards for hazardous locations for:

- NEC: Class I, Division 1, Groups C & D; Class I, Division 2, Groups A, B, C & D Class II, Divisions 1 & 2, Groups E, F, G
- CEC: Class I, Division 1, Groups C & D; Class I, Division 2, Groups A, B, C & D Class II, Divisions 1 & 2, Groups E, F, G

The EPSLED-MJ-XXW-LED comprised of a Larson Electronics LLC EPL-MJ-XXW-LED fixture with the light module set to strobe as default instead of steady burn. This assembly is built to NEC and CEC standards for hazardous locations and quality checked per ISO 9001:2015 standards.

Signed for and on behalf of: Larson Electronics, LLC
Place of issue: Kemp, TX

Signature: James Thomas

Name: James Thomas
Position: Operations Manager

LARSON ELECTRONICS LLC • 9419 E US HWY 175 • KEMP, TX 75143
p: 1-800-369-6671 • intl: 903-498-3363 • f: 903-498-3364 • sales@larsonelectronics.com

Material Safety Data Sheet

To Whom It May Concern,

Larson Electronics LLC EPSLED industrial line of LED lights without emergency backup for hazardous locations are considered "ARTICLES" under 29 CFR 1910-1200, the OSHA Hazard Communication Standard, and do not require a Material Safety Data Sheet (MSDS).

Articles are specifically exempt from the regulations of this standard. OSHA defines an article as follows:

1910-1200(c) – Article means a manufactured item other than a fluid or particle:

i. Which is formed to a specific shape or design during manufacture;
ii. Which has end use function(s) dependent in whole or in part upon its shape or design during end use; and
iii. Which under normal conditions does not release more than very small quantities.

The "hazardous location" and "explosion proof" are terminology for the environment where these products will be installed. This is not to be confused with "hazardous materials;" this product does not contain any hazardous materials.

Regards,

Ray Smith
Larson Electronics, LLC.

LARSON ELECTRONICS LLC • 9419 E US HWY 175 • KEMP, TX 75143
p: 1-800-369-6671 • intl: 903-498-3363 • f: 903-498-3364 • sales@larsonelectronics.com



<- Back

Product Description

Title: ELECTRIC LIGHTING FIXTURES FOR USE IN HAZARDOUS (CLASSIFIED) LOCATIONS

Company: LARSON ELECTRONICS LLC - Kemp, TX USA

Product Information: Trade Name(s): Magna Light., EPL.

LED Lighting suitable for used in Class I Division 1 Group C and D, Class I Division 2 Group A B C and D, Class II Division 1 Group E F and G, Class II Division 2 Group F and G and Class III hazardous locations, T6, -25°C to +40°C. , Model Nos. EPL-MJ-15W-1227, EPL-MJ-15W-3480, EPL-MJ-15W-1247, EPL-MJ-25W-1227, EPL-MJ-25W-3480, EPL-MJ-25W-1247, EPL-MJ-50W-1227, EPL-MJ-50W-3480, EPL-MJ-50W-1247, EPL-MJ-15-1227, EPL-MJ-25-1227, EPL-MJ-15WH-1227, EPL-MJ-25WH-1227.

Evaluated to the following: A representative sample of the listed devices have been tested, investigated and found to comply with the requirements of the Standard(s) for Electric Lighting Fixtures for Use in Hazardous (Classified) Locations (UL-844) and are identified with the ETL Listed Mark.

<- Back

Contact Us

ETL listed products that are in doubt or for products that do not appear in the directory, please request a verification of certification.
Americas+1-888-347-5478 (or +1-847-660-7407)
Email
etldirectory@intertek.com

Intertek Home
Product Directories
DLP on mobile devices

Inspector Center

Get up-to-date information on everything from our Accreditations to our Certifications and Marks. Learn more...

News

Intertek Unveils New Design for Product Safety and Quality Certification Marks. Learn more...

© 2010 Intertek All Rights Reserved.
All other product or service names are the property of their respective owners.



<- Back

Product Description

Title: LUMINAIRES

Company: LARSON ELECTRONICS LLC - Kemp, TX USA

Product Information: Trade Name(s): Magna Light, EPL.

Surface-mounted Luminaire, Model Nos. EPL-MJ-15W-1227, EPL-MJ-15W-3480, EPL-MJ-15W-1247, EPL-MJ-25W-1227, EPL-MJ-25W-3480, EPL-MJ-25W-1247, EPL-MJ-50W-1227, EPL-MJ-50W-3480, EPL-MJ-50W-1247, EPL-MJ-15-1227, EPL-MJ-25-1227, EPL-MJ-15WH-1227, EPL-MJ-25WH-1227.

Evaluated to the following: A representative sample of the listed devices have been tested, investigated and found to comply with the requirements of the Standard(s) for Luminaires (UL-1598) and are identified with the ETL Listed Mark.

<- Back

Contact Us

ETL listed products that are in doubt or for products that do not appear in the directory, please request a verification of certification.
Americas+1-888-347-5478 (or +1-847-660-7407)
Email
etldirectory@intertek.com

Intertek Home
Product Directories
DLP on mobile devices

Inspector Center

Get up-to-date information on everything from our Accreditations to our Certifications and Marks. Learn more...

News

Intertek Unveils New Design for Product Safety and Quality Certification Marks. Learn more...

© 2010 Intertek All Rights Reserved.
All other product or service names are the property of their respective owners.



<- Back

Product Description

Title: ELECTRIC LUMINAIRES FOR USE IN HAZARDOUS LOCATIONS

Company: LARSON ELECTRONICS LLC - Kemp, TX USA

Product Information: Trade Name(s): Magna Light.

LED Lighting suitable for used in Class I Division 1 Group C and D, Class I Division 2 Group A B C and D, Class II Division 1 Group E F and G, Class II Division 2 Group F and G and Class III hazardous locations, T6, -25°C to +40°C. , Model Nos. EPL-MJ-15W-1227, EPL-MJ-15W-3480, EPL-MJ-15W-1247, EPL-MJ-25W-1227, EPL-MJ-25W-3480, EPL-MJ-25W-1247, EPL-MJ-50W-1227, EPL-MJ-50W-3480, EPL-MJ-50W-1247, EPL-MJ-15-1227, EPL-MJ-25-1227, EPL-MJ-15WH-1227, EPL-MJ-25WH-1227.

Evaluated to the following: A representative sample of the listed devices have been tested, investigated and found to comply with the requirements of the Standard(s) for Electric Luminaries for Use in Hazardous Locations (CAN/CSA-C22.2 No. 137) and are identified with the cETL Listed Mark.

<- Back

Contact Us

ETL listed products that are in doubt or for products that do not appear in the directory, please request a verification of certification.
Americas+1-888-347-5478 (or +1-847-660-7407)
Email
etldirectory@intertek.com

Intertek Home
Product Directories
DLP on mobile devices

Inspector Center

Get up-to-date information on everything from our Accreditations to our Certifications and Marks. Learn more...

News

Intertek Unveils New Design for Product Safety and Quality Certification Marks. Learn more...

© 2010 Intertek All Rights Reserved.
All other product or service names are the property of their respective owners.



<- Back

Product Description

Title: LUMINAIRES

Company: LARSON ELECTRONICS LLC - Kemp, TX USA

Product Information: Trade Name(s): Magna Light.

Surface-mounted Luminaire, Model Nos. EPL-MJ-15W-1227, EPL-MJ-15W-3480, EPL-MJ-15W-1247, EPL-MJ-25W-1227, EPL-MJ-25W-3480, EPL-MJ-25W-1247, EPL-MJ-50W-1227, EPL-MJ-50W-3480, EPL-MJ-50W-1247, EPL-MJ-15-1227, EPL-MJ-25-1227, EPL-MJ-15WH-1227, EPL-MJ-25WH-1227.

Evaluated to the following: A representative sample of the listed devices have been tested, investigated and found to comply with the requirements of the Standard(s) for Luminaires (CAN/CSA-C22.2 No. 250.0) and are identified with the cETL Listed Mark.; A representative sample of the listed devices have been tested, investigated and found to comply with the requirements of the Standard(s) for Luminaires (CAN/CSA-C22.2 No. 250.0) and are identified with the cETL Listed Mark.

<- Back

Contact Us

ETL listed products that are in doubt or for products that do not appear in the directory, please request a verification of certification.
Americas+1-888-347-5478 (or +1-847-660-7407)
Email
etldirectory@intertek.com

Intertek Home
Product Directories
DLP on mobile devices

Inspector Center

Get up-to-date information on everything from our Accreditations to our Certifications and Marks. Learn more...

News

Intertek Unveils New Design for Product Safety and Quality Certification Marks. Learn more...

© 2010 Intertek All Rights Reserved.
All other product or service names are the property of their respective owners.

Certification

Manufacturer: Larson Electronics LLC
Address: 9419 US-HWY 175
Kemp, Texas 75143

Declare the following equipment conforms to the standard(s) as listed:

Model: EPSLED-MJ-XX-LED
Description: Explosion Proof LED Light

Evaluated Listings:

CE: DIRECTIVE 2014/35/EU - LOW VOLTAGE DIRECTIVE
CE: DIRECTIVE 2014/30/EU - EMC DIRECTIVE
CE: Regulation (EC) No 1907/2006 - REACH REGULATION
CE: DIRECTIVE 2015/863/EU - ROHS DIRECTIVE

The EPSLED-MJ-XX-LED Series complies with the essential protection requirements of the European Parliament of the Council Directive for Low Voltage Directive, EMC Directive, REACH Regulation, and RoHS Directive. This certification applies to all specimens manufactured in accordance to the manufacture's drawings.

Signed for and on behalf of: Larson Electronics, LLC
Place of issue: Kemp, TX

Signature: James Thomas

Name: James Thomas
Position: Operations Manager

LARSON ELECTRONICS LLC • 9419 E US HWY 175 • KEMP, TX 75143
p: 1-800-369-6671 • intl: 903-498-3363 • f: 903-498-3364 • sales@larsonelectronics.com

Certification

Manufacturer: Larson Electronics LLC
Address: 9419 US-HWY 175
Kemp, Texas 75143

Declare the following equipment conforms to the standard(s) as listed:

Model: EPSLED-MJ-XX-LED
Description: Explosion Proof LED Light

Evaluated Listings:

CE: Regulation (EC) No 1907/2006 - REACH REGULATION
CE: DIRECTIVE 2015/863/EU - ROHS DIRECTIVE

This is to certify that products offered by Larson Electronics LLC comply with the Reduction of Hazardous Substances (RoHS) directives. Directive 2002/95/EC became effective on 1 July 2006. It restricts the use of six substances in the manufacture of electrical and electronic equipment. This directive was revised in June 2011 and is now referred to as directive 2011/65/EU. Directive 2015/863/EU amending Annex II to Directive 2011/65/EU announced plans to add four substances from 22 July 2019.

We hereby certify that the equipment specified above conforms to the Directive(s) by containing less of the restricted substances than the stated limits.

Signed for and on behalf of: Larson Electronics, LLC
Place of issue: Kemp, TX

Signature: James Thomas

Name: James Thomas
Position: Operations Manager

LARSON ELECTRONICS LLC • 9419 E US HWY 175 • KEMP, TX 75143
p: 1-800-369-6671 • intl: 903-498-3363 • f: 903-498-3364 • sales@larsonelectronics.com

Certification

Manufacturer: Larson Electronics LLC
Address: 9419 US-HWY 175
Kemp, Texas 75143

Declare the following equipment conforms to the standard(s) as listed:

Model: EPSLED-MJ-XX-LED
Description: Explosion Proof LED Light

Evaluated Listings:

CE: Regulation (EC) No 1907/2006 - REACH REGULATION

This letter establishes the opinion of Larson Electronics LLC regarding the status, under the current European Union ("EU") Regulations on Registration, Evaluation, Authorization, and Restriction of Chemical Substances ("REACH").

REACH does not apply to manufactured products which are referred to as "completed articles". Substances (chemicals) are subject to REACH registration, NOT products.

In addition, Articles are exempt from the REACH requirements if (a) the Article does not contain a substance of very high concern or candidate substance in an amount exceeding 0.1% weight by weight, and (b) if substances present in the Article in excess of 1 ton per year per importer are not expected nor intended to be released.

Based on communication with our raw material suppliers, we conclude that to the best of our knowledge our products requiring REACH compliance do not contain any of the currently listed SVHC in concentrations of 0.1% or above.

Accordingly, we foresee no registration or pre-registration requirement for the products we supply.

Signed for and on behalf of: Larson Electronics, LLC
Place of issue: Kemp, TX

Signature: James Thomas

Name: James Thomas
Position: Operations Manager

LARSON ELECTRONICS LLC • 9419 E US HWY 175 • KEMP, TX 75143
p: 1-800-369-6671 • intl: 903-498-3363 • f: 903-498-3364 • sales@larsonelectronics.com

Larson Electronics LLC
9419 E US HWY 175, Kemp, TX 75143
Phone: 800.369.6671

www.LarsonElectronics.com
Email: sales@LarsonElectronics.com
Fax: 903.765.7664

Frequently Asked Questions (FAQ)

There are no Faqs