Larson Electronics LLC
9419 E US HWY 175, Kemp, TX 75143
Phone: 800.369.6671

www.LarsonElectronics.com
Email: sales@LarsonElectronics.com
Fax: 903.498.3364

HAL-LC-48-LED-R1-1227-PND

100W Hazardous Location Integrated LED Linear Fixture - C1D2, C2D1 - 120-277V - 15,300 lms/Pendant Mount - IP66/Field Serviceable

Product ID: 276375



Larson Electronics LLC manufactures a wide variety of products, including custom built to spec designs. The pictures displayed for this unit are a general representation of form factor for the product line and may not accurately represent this exact configuration in every detail due to custom builds and changes between similar products in our standard catalog. The specifics for this configuration are listed in the specification table and supporting documentation (CAD files, Dimensional Drawing, Name Plate Diagram, Wiring Diagram, etc.). This means that specific details (receptacles, plugs, wires, connections, mounting brackets, external finishes, etc.) may not be accurately represented in images vs specifications. Please review specifications and do not order based solely on images.

HAL-LC-48-LED-R1-1227-PND - Hazardous Location LED Fixture
Listing: NRTL Listed to United States, Canada
Lamp Technology: LED
Dimensions: 47.72'"-L x 6.26-W x 6"-H
Weight: 30 lbs
Voltage: 120-277V AC, 50/60Hz
Total Watts: 100W
Total Lumens: 15,300 lms
Luminous Efficacy: 153 Lm/w
Lamp Life: 75,000+ Hours
LED Color Temperature: 5000K, 4500K, 4000K, 3500K or 3000K
Color Rendering Index: >80 CRI
Lamp Type: Integrated LED
Lamp Base: -
Replacement Lamp: -
Beam Angle: 80° x 120°
Lighting Configuration: Flood
Power Efficiency: >95%
Power Factor: 0.992
Amps: 0.833A @ 120V, 0.480A @ 208V, 0.454A @ 220V, 0.416A @ 240V, 0.361A @ 277V
Ambient Operating Temp Range: -50°C to +65°C
Operating Temp Rating: T5
Housing Material: Copper Free Cast Aluminum (non sparking)
Housing Finish: Epoxy Powder Coated - Gray
Lens Material: Hardened Polycarbonate

Ratings/Approvals
Class I, Division 2 Groups A, B, C and D
Class II, Division 1 Groups E, F and G
Class II, Division 2 Groups F and G
Class III, Divisions 1 & 2
NRTL Certified to UL 844 Ed. 13
NRTL Certified to UL 1598
NRTL Certified to C22.2 No. 137 Rev 2009
NRTL Certified to C22.2 No. 250.0
NRTL Certified to C22.2 No. 30-M-1986 Rev 2012
IEC 60529 Tested
IP66 Rated Waterproof
Replacement for Fluorescent Linear Fixtures
Field Serviceable

Special Orders - Special Requirements
Contact us for special requirements

Toll Free: 1-800-369-6671

Gasket Material: Silicone

Mounting: Pendant Mount - Other Mounts Available

Wiring Hub: (1) 3/4" NPT

Intl: 1-903-270-1187

Fax: 1-903-498-3364

E-mail: sales@larsonelectronics.com

The Larson Electronics HAL-LC-48-LED-R1-1227-PND Hazardous Location Integrated LED Linear Fixture offers powerful lighting with heavy-duty and energy efficient benefits in combustible sites. This 100-watt LED unit delivers 15,300 lumens and is field serviceable. Compatible with pendant mount installations, the IP66 rated fixture operates on universal 120-277V AC, 50/60Hz and features a 3/4" NPT wiring hub.

The HAL-LC-48-LED-R1-1227-PND is a Class I, Division 2 and Class II, Division 1 & 2 linear fixture that is designed for reliable illumination in facilities that contain hazardous gases/vapors. This 100-watt fixture offers 15,300 lumens of high quality light. An 80° x 120° flood beam angle promotes wide light distribution in the surrounding area. Color temperature options for the LED light includes: 5000K, 4500K, 4000K, 3500K or 3000K. This unit is a suitable replacement for fluorescent linear fixtures. Equipped with field serviceable features, the LED assembly is sealed from the driver box, allowing the driver to be changed without impacting the LEDs.

This hazardous location light is protected by a copper-free cast aluminum housing, with an epoxy powder coated gray finish for durability in rugged environments. The non-sparking housing is specially designed to dissipate heat, which increases the efficiency and lifespan of the LEDs and electronic components. Equipped with a hardened polycarbonate lens, the T5-rated LED fixture carries an IP66 waterproof rating.

LED Benefits: Unlike gas burning and arc type lamps that have glass bulbs, LEDs have no filaments or fragile housings to break during operation and/or transportation. Instead of heating a small filament or using a combination of gases to produce light, light emitting diodes (LEDs) use semi-conductive materials that illuminate when electric current is applied, providing instant illumination with no warm up or cool down time before re-striking. Because there is no warm up period, this light can be cycled on and off with no reduction in lamp life.

LED lights run at significantly cooler temperatures than traditional metal halide and high pressure sodium lights and contain no harmful gases, vapors, or mercury, making them both safer and more energy efficient. No extra energy is wasted in cooling enclosed work areas due to external heat emissions from bulb type lights, and the operator risks associated with traditional lighting methods, such as accidental burns and exposure to hazardous substances contained in the glass bulbs, are eliminated. In addition, LEDs are also safer for the environment as they are 100% recyclable, which eliminates the need for costly special disposal services required with traditional gas burning and arc type lamps.

Field Serviceability: This LED light fixture is field serviceable. All major internal components can be purchased from Larson Electronics and installed by a licensed electrician with basic tools. With most explosion proof fixtures, the fixture must be returned to the manufacturer for repair work, which presents downtime and long turn around times for repair work. Larson Electronics addresses this issue with products that cater to field serviceability, allowing operators to perform service work without having to return the fixture to the manufacturer in the event of damage or failure.

Voltage: The hazardous location light is universal voltage capable and can be operated with 120-277V AC, 50/60Hz.

Wiring: A 3/4" NPT hub at the back of the unit is available for completing wiring connections.

Mount: This linear LED light fixture comes standard with pendant mounting features. Several mounting options including ceiling, wall and trunnion mounts for replacing existing light fixtures can be ordered separately.

Suggested Applications: Hazardous locations, oil drilling rigs, refineries, solvent and cleaning areas, chemical manufacturing, waste treatment plants, gas processing plants, aircraft maintenance and more.

At Larson Electronics, we do more than meet your lighting needs. We also provide

replacement, retrofit, and upgrade parts as well as industrial grade power accessories. Our craftsmen can custom build any lighting system and/or accessories to fit the unique demands of your operation. A commitment to honesty, quality, and dependability has made Larson Electronics a leader in the lighting and electronics business since 1973. Contact us today at 800-369-6671 or message sales@larsonelectronics.com for more information about our custom options tailored to meet your specific industry needs.

REV	DESCRIPTION	DATE
A	PRODUCTION RELEASE	04/29/2022

HAL-LC-XX-LED-RX-1227-XX

LARSON ELECTRONICS®

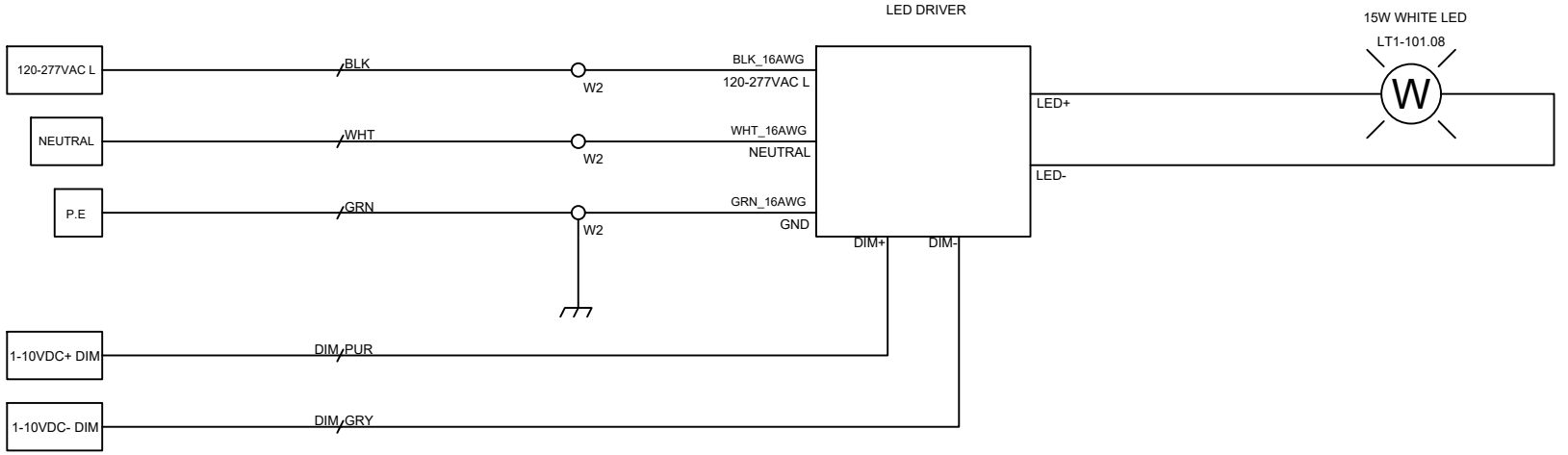

TAGS	QTY	CATALOG	DESCRIPTION
LT1-101.08	1	N/A	Hazloc LED Fixture, 120-277V AC, 50/60 Hz
W2	3	UNV00009802	2 HOLES WAGO

LARSON ELECTRONICS

9419 E US HWY 175,
KEMP, TX 75143

TITLE			
HAL-LC-XX-LED-RX-1227-XX			
DRAWN BY	DATE	REV	
K.NGUYEN	04/29/2022	A	
CHECKED BY	SHEET #	DRAWING #	
S.DESAI	1 OF 1	101	

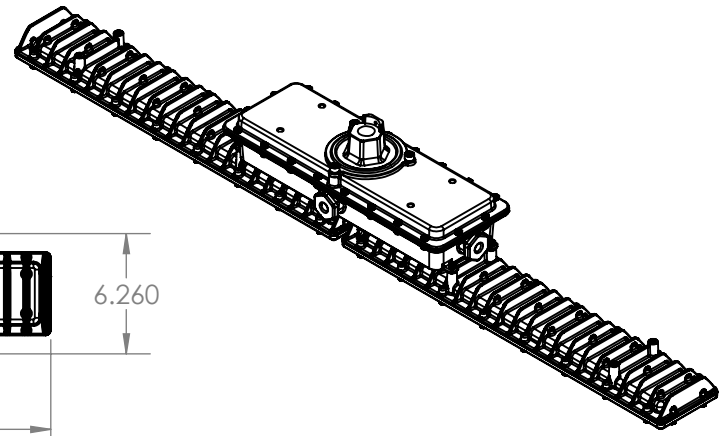

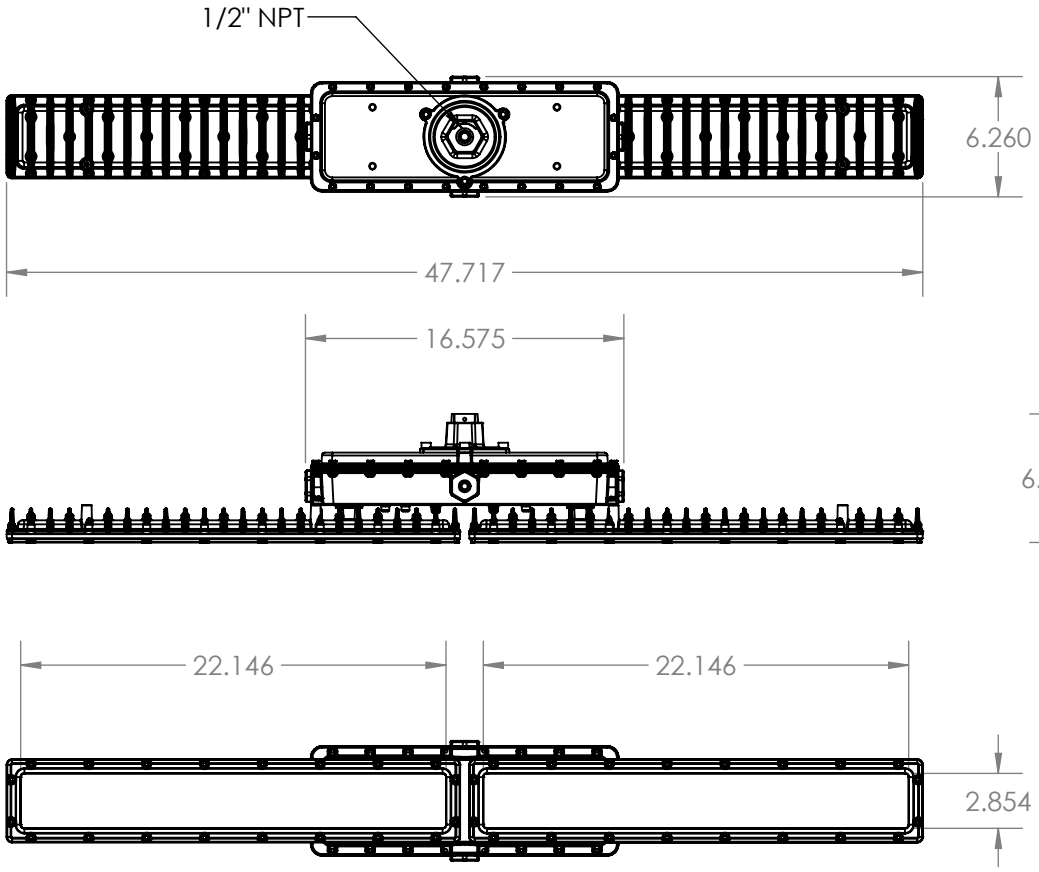

LARSON ELECTRONICS

TITLE:

HAL-LC-48-LED-R1-1227-PND

FINISH			
SURFACE AREA [sq. in]			NAME
DIMENSIONS ARE IN INCHES		DRAWN	CHRISTOPHER THAUER
MATERIAL		CHECKED	N/A
DO NOT SCALE DRAWING		DATE	2/15/2023

SIZE **A**	DWG. NO.	REV
SCALE: NTS		SHEET 1 OF 1

PROPRIETARY AND CONFIDENTIAL
THE INFORMATION CONTAINED IN THIS DRAWING IS THE SOLE PROPERTY OF LARSON ELECTRONICS LLC. ANY REPRODUCTION IN PART OR AS A WHOLE WITHOUT THE WRITTEN PERMISSION OF LARSON ELECTRONICS LLC IS PROHIBITED.

UNLESS OTHERWISE NOTED:

Angle	+/- .5 deg
.X	+/- .02
.XX	+/- .01
.XXX	+/- .005



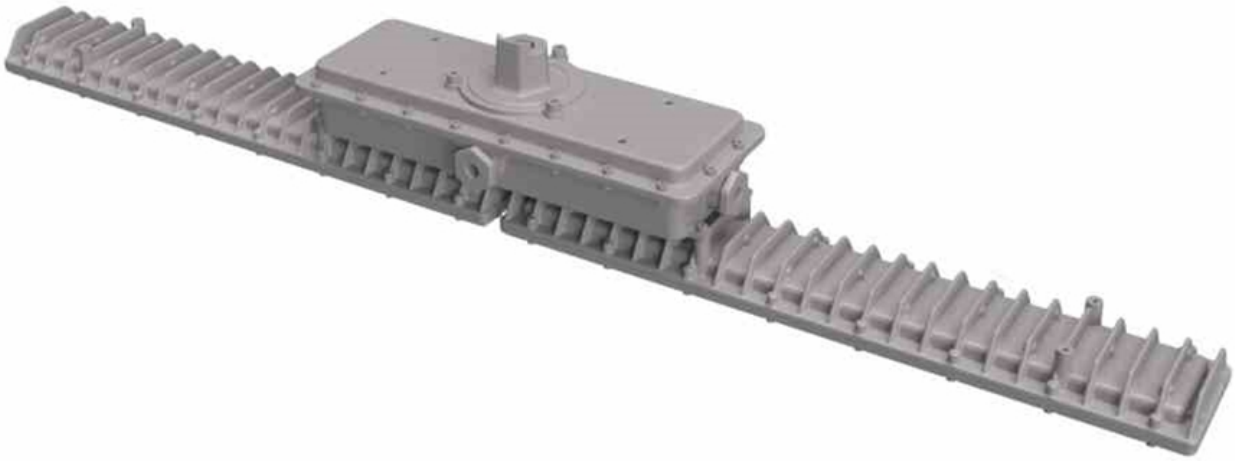





Material Safety Data Sheet

To Whom It May Concern,

Larson Electronics LLC EHL, EPL, EPLC2, HAL, HALP, HALD, HAL-LI, HALS, and HALSS industrial line of LED lights without emergency backup for hazardous locations are considered "ARTICLES" under 29 CFR 1910-1200, the OSHA Hazard Communication Standard, and do not require a Material Safety Data Sheet (MSDS).

Articles are specifically exempt from the regulations of this standard. OSHA defines an article as follows:

1910-1200(c) – Article means a manufactured item other than a fluid or particle:

i. Which is formed to a specific shape or design during manufacture;
ii. Which has end use function(s) dependent in whole or in part upon its shape or design during end use; and
iii. Which under normal conditions does not release more than very small quantities.

The "hazardous location" and "explosion proof" are terminology for the environment where these products will be installed. This is not to be confused with "hazardous materials;" this product does not contain any hazardous materials.

Regards,



Ray Smith
Larson Electronics, LLC.

LARSON ELECTRONICS LLC • 9419 E US HWY 175 • KEMP, TX 75143
p: 1-800-369-6671 • intl: 903-498-3363 • f: 903-498-3364 • sales@larsonelectronics.com



<- Back

Product Description

Title: ELECTRIC LIGHTING FIXTURES FOR USE IN HAZARDOUS (CLASSIFIED) LOCATIONS

Company: LARSON ELECTRONICS LLC - Kemp, TX USA

Product Information: Trade Name(s): Magna Light., EPL.

Lighting for use in Class I Division 2, Groups A,B,C and D, Class II Divison 1 and 2, Groups E,F and G, Class III hazardous locations, T5. Model Nos. HAL-LC-24-LED-R1, HAL-LC-24-LED-R3, HAL-LC-24-LED-R2, HAL-LC-48-LED-R1, HAL-LC-48-LED-R3, HAL-LC-48-LED-R2.

Evaluated to the following: A representative sample of the listed devices have been tested, investigated and found to comply with the requirements of the Standard(s) for Electric Lighting Fixtures for Use in Hazardous (Classified) Locations (UL-844) and are identified with the ETL Listed Mark.

<- Back

Contact Us

ETL listed products that are in doubt or for products that do not appear in the directory, please request a verification of certification.
Americas+1-888-347-5478 (or +1-847-660-7407)
Email
etldirectory@intertek.com

Intertek Home
Product Directories
DLP on mobile devices

Inspector Center

Get up-to-date information on everything from our Accreditations to our Certifications and Marks. Learn more...

News

Intertek Unveils New Design for Product Safety and Quality Certification Marks. Learn more...

© 2010 Intertek All Rights Reserved.
All other product or service names are the property of their respective owners.



<- Back

Product Description

Title: LUMINAIRES

Company: LARSON ELECTRONICS LLC - Kemp, TX USA

Product Information: Trade Name(s): Magna Light, EPL.

Surface-mounted Luminaire, Model Nos. HAL-LC-24-LED-R1-1227, HAL-LC-24-LED-R1-4748, HAL-LC-24-LED-R1-1247, HAL-LC-24-LED-R3- 1227, HAL-LC-24-LED-R3-4748, HAL-LC-24-LED-R3-1247, HAL-LC-24-LED-R2-1227, HAL-LC-24-LED-R2-4748, HAL-LC-24-LED-R2-1247, HAL-LC-48-LED-R1-1227, HAL-LC-48- LED-R1-4748, HAL-LC-48-LED-R1-1247, HAL-LC-48-LED-R3-1227, HAL-LC-48-LED-R3-4748, HAL-LC-48-LED-R3-1247, HAL-LC-48-LED-R2-1227, HAL-LC-48-LED-R2-4748, HAL-LC-48-LED-R2-1247.

Evaluated to the following: A representative sample of the listed devices have been tested, investigated and found to comply with the requirements of the Standard(s) for Luminaires (UL-1598) and are identified with the ETL Listed Mark.

<- Back

Contact Us

ETL listed products that are in doubt or for products that do not appear in the directory, please request a verification of certification.
Americas+1-888-347-5478 (or +1-847-660-7407)
Email etldirectory@intertek.com

Intertek Home
Product Directories
DLP on mobile devices

Inspector Center

Get up-to-date information on everything from our Accreditations to our Certifications and Marks. Learn more...

News

Intertek Unveils New Design for Product Safety and Quality Certification Marks. Learn more...

© 2010 Intertek All Rights Reserved.
All other product or service names are the property of their respective owners.



<- Back

Product Description

Title: ELECTRIC LUMINAIRES FOR USE IN HAZARDOUS LOCATIONS

Company: LARSON ELECTRONICS LLC - Kemp, TX USA

Product Information: Trade Name(s): Magna Light.

Lighting for use in Class I Division 2, Groups A,B,C and D, Class II Divison 1 and 2, Groups E,F and G, Class III hazardous locations, T5. Model Nos. HAL-LC-24-LED-R1, HAL-LC-24-LED-R3, HAL-LC-24-LED-R2, HAL-LC-48-LED-R1, HAL-LC-48-LED-R3, HAL-LC-48-LED-R2.

Evaluated to the following: A representative sample of the listed devices have been tested, investigated and found to comply with the requirements of the Standard(s) for Electric Luminaries for Use in Hazardous Locations (CAN/CSA-C22.2 No. 137) and are identified with the cETL Listed Mark.

<- Back

Contact Us

ETL listed products that are in doubt or for products that do not appear in the directory, please request a verification of certification.
Americas+1-888-347-5478 (or +1-847-660-7407)
Email etldirectory@intertek.com

Intertek Home
Product Directories
DLP on mobile devices

Inspector Center

Get up-to-date information on everything from our Accreditations to our Certifications and Marks. Learn more...

News

Intertek Unveils New Design for Product Safety and Quality Certification Marks. Learn more...

© 2010 Intertek All Rights Reserved.
All other product or service names are the property of their respective owners.



<- Back

Product Description

Title: LUMINAIRES

Company: LARSON ELECTRONICS LLC - Kemp, TX USA

Product Information: Trade Name(s): Magna Light.

Surface-mounted Luminaire, Model Nos. HAL-LC-24-LED-R1-1227, HAL-LC-24-LED-R1-4748, HAL-LC-24-LED-R1-1247, HAL-LC-24-LED-R3- 1227, HAL-LC-24-LED-R3-4748, HAL-LC-24-LED-R3-1247, HAL-LC-24-LED-R2-1227, HAL-LC-24-LED-R2-4748, HAL-LC-24-LED-R2-1247, HAL-LC-48-LED-R1-1227, HAL-LC-48- LED-R1-4748, HAL-LC-48-LED-R1-1247, HAL-LC-48-LED-R3-1227, HAL-LC-48-LED-R3-4748, HAL-LC-48-LED-R3- 1247, HAL-LC-48-LED-R2-1227, HAL-LC-48-LED-R2-4748, HAL-LC-48-LED-R2-1247.

Evaluated to the following: A representative sample of the listed devices have been tested, investigated and found to comply with the requirements of the Standard(s) for Luminaires (CAN/CSA-C22.2 No. 250.0) and are identified with the cETL Listed Mark.; A representative sample of the listed devices have been tested, investigated and found to comply with the requirements of the Standard(s) for Luminaires (CAN/CSA-C22.2 No. 250.0) and are identified with the cETL Listed Mark.

<- Back

Contact Us

ETL listed products that are in doubt or for products that do not appear in the directory, please request a verification of certification.
Americas+1-888-347-5478 (or +1-847-660-7407)
Email
etldirectory@intertek.com

Intertek Home
Product Directories
DLP on mobile devices

Inspector Center

Get up-to-date information on everything from our Accreditations to our Certifications and Marks. Learn more...

News

Intertek Unveils New Design for Product Safety and Quality Certification Marks. Learn more...

© 2010 Intertek All Rights Reserved.
All other product or service names are the property of their respective owners.

Certification

Manufacturer: Larson Electronics LLC
Address: 9419 US-HWY 175
Kemp, Texas 75143

Declare the following equipment conforms to the standard(s) as listed:

Model: HAL-LC-XX-LED
Description: Hazardous Area Linear LED Light

Evaluated Listings:

CE: DIRECTIVE 2014/35/EU - LOW VOLTAGE DIRECTIVE
CE: DIRECTIVE 2014/30/EU - EMC DIRECTIVE
CE: Regulation (EC) No 1907/2006 - REACH REGULATION
CE: DIRECTIVE 2015/863/EU - ROHS DIRECTIVE

The HAL-LC-XX-LED Series complies with the essential protection requirements of the European Parliament of the Council Directive for Low Voltage Directive, EMC Directive, REACH Regulation, and RoHS Directive. This certification applies to all specimens manufactured in accordance to the manufacture's drawings.

Signed for and on behalf of: Larson Electronics, LLC
Place of issue: Kemp, TX

Signature: James Thomas

Name: James Thomas
Position: Operations Manager

LARSON ELECTRONICS LLC • 9419 E US HWY 175 • KEMP, TX 75143
p: 1-800-369-6671 • intl: 903-498-3363 • f: 903-498-3364 • sales@larsonelectronics.com

Certification

Manufacturer: Larson Electronics LLC
Address: 9419 US-HWY 175
Kemp, Texas 75143

Declare the following equipment conforms to the standard(s) as listed:

Model: HAL-LC-XX-LED
Description: Hazardous Area Linear LED Light

Evaluated Listings:

CE: Regulation (EC) No 1907/2006 - REACH REGULATION
CE: DIRECTIVE 2015/863/EU - ROHS DIRECTIVE

This is to certify that products offered by Larson Electronics LLC comply with the Reduction of Hazardous Substances (RoHS) directives. Directive 2002/95/EC became effective on 1 July 2006. It restricts the use of six substances in the manufacture of electrical and electronic equipment. This directive was revised in June 2011 and is now referred to as directive 2011/65/EU. Directive 2015/863/EU amending Annex II to Directive 2011/65/EU announced plans to add four substances from 22 July 2019.

We hereby certify that the equipment specified above conforms to the Directive(s) by containing less of the restricted substances than the stated limits.

Signed for and on behalf of: Larson Electronics, LLC
Place of issue: Kemp, TX

Signature: James Thomas

Name: James Thomas
Position: Operations Manager

LARSON ELECTRONICS LLC • 9419 E US HWY 175 • KEMP, TX 75143
p: 1-800-369-6671 • intl: 903-498-3363 • f: 903-498-3364 • sales@larsonelectronics.com

Certification

Manufacturer: Larson Electronics LLC
Address: 9419 US-HWY 175
Kemp, Texas 75143

Declare the following equipment conforms to the standard(s) as listed:

Model: HAL-LC-XX-LED
Description: Hazardous Area Linear LED Light

Evaluated Listings:

CE: Regulation (EC) No 1907/2006 - REACH REGULATION

This letter establishes the opinion of Larson Electronics LLC regarding the status, under the current European Union ("EU") Regulations on Registration, Evaluation, Authorization, and Restriction of Chemical Substances ("REACH").

REACH does not apply to manufactured products which are referred to as "completed articles". Substances (chemicals) are subject to REACH registration, NOT products.

In addition, Articles are exempt from the REACH requirements if (a) the Article does not contain a substance of very high concern or candidate substance in an amount exceeding 0.1% weight by weight, and (b) if substances present in the Article in excess of 1 ton per year per importer are not expected nor intended to be released.

Based on communication with our raw material suppliers, we conclude that to the best of our knowledge our products requiring REACH compliance do not contain any of the currently listed SVHC in concentrations of 0.1% or above.

Accordingly, we foresee no registration or pre-registration requirement for the products we supply.

Signed for and on behalf of: Larson Electronics, LLC
Place of issue: Kemp, TX

Signature: James Thomas

Name: James Thomas
Position: Operations Manager

LARSON ELECTRONICS LLC • 9419 E US HWY 175 • KEMP, TX 75143
p: 1-800-369-6671 • intl: 903-498-3363 • f: 903-498-3364 • sales@larsonelectronics.com

Certification

Manufacturer: Larson Electronics LLC
Address: 9419 US-HWY 175
Kemp, Texas 75143

Declare the following equipment conforms to the standard(s) as listed:

Model: HAL-LC-XX-LED
Description: Hazardous Area Linear LED Light

Evaluated Listings:

FCC: Radio Frequency Emission & Authorization Status

The HAL-LC Series complies with Federal Communications Commission requirements for Radio Frequency Emission & Authorization Status. This product is not capable of emitting rf energy and does not require FCC authorization. This certification applies to all specimens manufactured in accordance to the manufacture's drawings.

Signed for and on behalf of: Larson Electronics, LLC
Place of issue: Kemp, TX

Signature: James Thomas

Name: James Thomas
Position: Operations Manager

LARSON ELECTRONICS LLC • 9419 E US HWY 175 • KEMP, TX 75143
p: 1-800-369-6671 • intl: 903-498-3363 • f: 903-498-3364 • sales@larsonelectronics.com

Frequently Asked Questions (FAQ)