Larson Electronics LLC
9419 E US HWY 175, Kemp, TX 75143
Phone: 800.369.6671

www.LarsonElectronics.com
Email: sales@LarsonElectronics.com
Fax: 903.498.3364

ATEX-HALP-24-2L-T8-2X14W-LED-R1-24V-SFC

28W Flameproof LED Linear Fixture - 24V AC/DC - (2) 2' T8 Lamps - ATEX/IECEx - IP66 - Surface Mount

Product ID: 274570



Larson Electronics LLC manufactures a wide variety of products, including custom built to spec designs. The pictures displayed for this unit are a general representation of form factor for the product line and may not accurately represent this exact configuration in every detail due to custom builds and changes between similar products in our standard catalog. The specifics for this configuration are listed in the specification table and supporting documentation (CAD files, Dimensional Drawing, Name Plate Diagram, Wiring Diagram, etc.). This means that specific details (receptacles, plugs, wires, connections, mounting brackets, external finishes, etc.) may not be accurately represented in images vs specifications. Please review specifications and do not order based solely on images.

ATEX-HALP-24-2L-T8-2X14W-LED-R1-24V-SFC Flameproof LED Light
Listing: International, European Union
Lamp Technology: LED
Dimensions: 8.25" x 27.6" x 5.71"
Lamp Quantity: 2
Weight: 11.02 lb (5 kg)
Voltage: 24 V AC/DC
Frequency: 50 Hz
Total Watts: 28W (14W Per Lamp)
Total Lumens: 3,500 lms (1,750 Per Lamp)
Luminous Efficacy: 125 Lm/W
Lamp Life: 50,000+ Hours
Color Temperature: 5000K, 4500K, 4000K, 3500K, or 3000K
Color Rendering Index: -
Lamp Type: T8
Lamp Base: 2-pin G13
Replacement Lamp: LEDT8-24-V1
Beam Angle: -
Lighting Configuration: Flood Pattern
Power Efficiency: -
Power Factor: >0.98
Amperage: 1.16 A @ 24 V AC/DC
Ambient Operating Temp Range: -25°C to +40°C
Operating Temp Rating: T4
Housing Material: Glass Fiber Reinforced Polyester
Housing Finish: -
Lens Material: Polycarbonate
Gasket Material: Foam
Mount: -

Ratings/Approvals
ATEX/IECEx Rated
Zone 1/Zone 2
Zone 21/Zone 22
Ex deq IIC T4 Gb
Ex deqmb IIC T4 Gb
Ex II 2GD Ex deq IIC T4 Gb
Ex II 2GD Ex deqmb IIC T4 Gb
IP66

Special Orders - Special Requirements
Contact us for special requirements

Terminals: L1, N + (2) PE - 0.39" (10mm)
Hub Quantity: 1
Hub Size/Location: (1) 1.5" (M25) @ Side
Stopping Plugs: (2) 1.5" (M25) Molded Plastic/Polyamide

Toll Free: 1-800-369-6671
Intl: 1-903-270-1187
Fax: 1-903-498-3364
E-mail: sales@larsonelectronics.com

The ATEX-HALP-24-2L-T8-2X14W-LED-R1-24V-SFC from Larson Electronics is a Flameproof LED Linear Fixture that is designed for outdoor illumination in ATEX/IECEx rated flammable environments. Equipped with two, 2-foot T8 LED lamps, this 28-watt fixture is compatible with low voltage 24 V AC/DC. The IP66-rated unit is constructed of glass fiber reinforced polyester with a polycarbonate lens and features an internal electronic ballast with an interlocking system for protection.

The ATEX-HALP-24-2L-T8-2X14W-LED-R1-24V-SFC is a powerful lighting solution for combustible facilities, industrial sites and outdoor locations. This 28-watt unit operates on low voltage 24 V AC/DC and contains two, 2-foot T8 LED lamps (2-pin G13 base). During use, the fixture offers 3,500 lumens of output (1,750 per lamp) in a flood beam configuration, with an exceptional CRI rating of 75. Color temperature options include: 5000K, 4500K, 4000K, 3500K, or 3000K.

LED Benefits: Unlike gas burning and arc type lamps that have glass bulbs, LEDs have no filaments or fragile housings to break during operation and/or transportation. Instead of heating a small filament or using a combination of gases to produce light, light emitting diodes (LEDs) use semi-conductive materials that illuminate when electric current is applied, providing instant illumination with no warm up or cool down time before re-striking. Because there is no warm up period, this light can be cycled on and off with no reduction in lamp life.

LED lights run at significantly cooler temperatures than traditional metal halide and high pressure sodium lights and contain no harmful gases, vapors, or mercury, making them both safer and more energy efficient. No extra energy is wasted in cooling enclosed work areas due to external heat emissions from bulb type lights, and the operator risks associated with traditional lighting methods, such as accidental burns and exposure to hazardous substances contained in the glass bulbs, are eliminated. In addition, LEDs are also safer for the environment as they are 100% recyclable, which eliminates the need for costly special disposal services required with traditional gas burning and arc type lamps.

This full-plastic explosion proof fixture is constructed of glass fiber reinforced polyester. The lens consists of UV-resistant polycarbonate and is equipped with a foam gasket. This IP66-rated unit comes with an approximate lifespan of 50,000+ hours and is suitable for ATEX/IECEx rated Zone 1/Zone 2 and Zone 21/Zone 22 flammable environments. Equipped with a T4 temperature rating, the outdoor fixture can be used in locations with ambient temperatures ranging between -25°C to +40°C.

Wiring: The ATEX-HALP-24-2L-T8-2X14W-LED-R1-24V-SFC features L1, N and two PE terminals for completing electrical connections. Cables are fed through one, 1.5" (M25) hub, located at the side of the fixture. This unit comes with two, 1.5" (M25) molded plastic/polyamide stopping plugs. A central locking system protects the internal components of the unit, which must be unlocked during installation or relamping.

Mounting Compatibility: This explosion proof light is equipped with surface mounting brackets.

Suggested Applications: Paint spray booths, aircraft maintenance, oil drilling rigs, refineries, solvent and cleaning areas, gas processing plants, chemical manufacturing, waste water treatment plants, offshore applications and more.

At Larson Electronics, we do more than meet your lighting needs. We also provide replacement, retrofit, and upgrade parts as well as industrial grade power accessories. Our craftsmen can custom build any lighting system and/or accessories to fit the unique demands of your operation. A commitment to honesty, quality, and dependability has made Larson Electronics a leader in the lighting and electronics business since 1973. Contact us today at 800-369-6671 or message sales@larsonelectronics.com for more information about our custom options tailored to meet your specific industry needs.

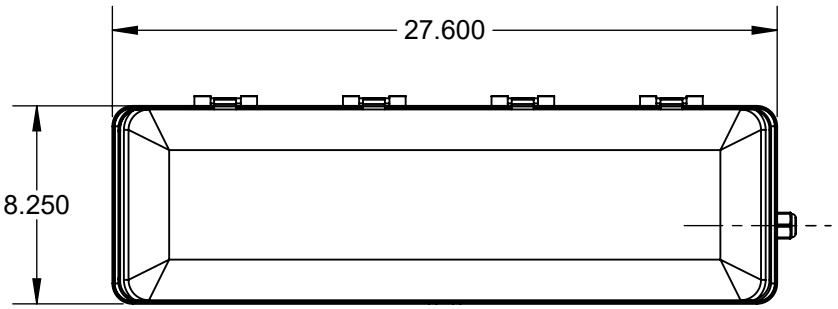

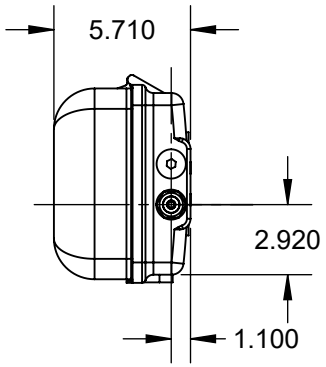

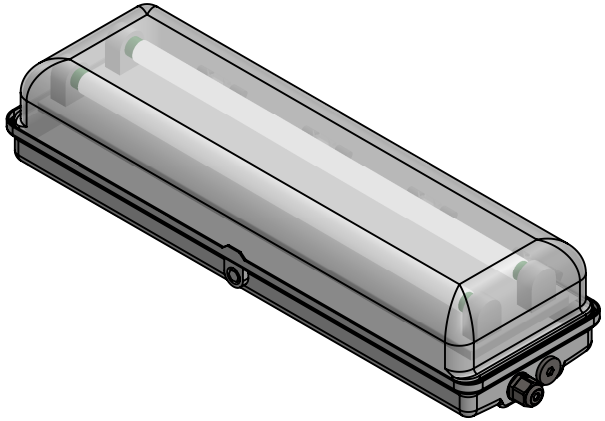

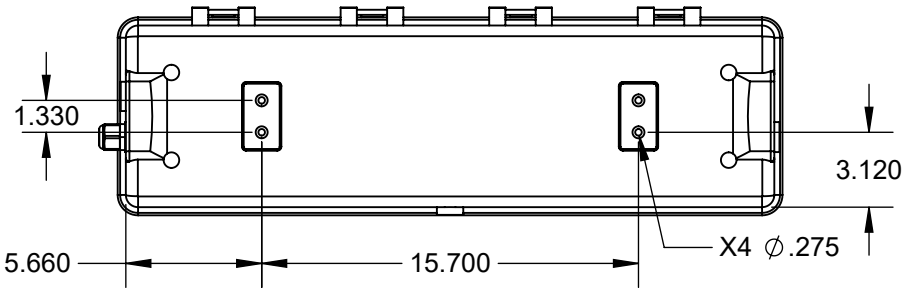

LARSON ELECTRONICS®

PART NUMBER:
CZ0865-2-18W-1-BATEX-HALP-24-2L-T8-2X14W-LED-R1-24V-SFC

SIZE	REV
A	1

DIMENSIONS ARE IN INCHES				
DO NOT SCALE DRAWING	DATE	3/5/2025	SCALE: NTS	SHEET 1 OF 1

PROPRIETARY AND CONFIDENTIAL
THE INFORMATION CONTAINED IN THIS DRAWING IS THE SOLE PROPERTY OF LARSON ELECTRONICS LLC. ANY REPRODUCTION IN PART OR AS A WHOLE WITHOUT THE WRITTEN PERMISSION OF LARSON ELECTRONICS LLC IS PROHIBITED.









Frequently Asked Questions (FAQ)