Larson Electronics LLC
9419 E US HWY 175, Kemp, TX 75143
Phone: 800.369.6671

www.LarsonElectronics.com
Email: sales@LarsonElectronics.com
Fax: 903.498.3364

EPNFDS-150A-3P-AUX.1

Explosion Proof Non Fused Disconnect Switch - Class I, II, III - 150A, 3-pole - Aux Contacts - (1) 2" (1) 0.5" Hubs

Product ID: 273716

Larson Electronics LLC manufactures a wide variety of products, including custom built to spec designs. The pictures displayed for this unit are a general representation of form factor for the product line and may not accurately represent this exact configuration in every detail due to custom builds and changes between similar products in our standard catalog. The specifics for this configuration are listed in the specification table and supporting documentation (CAD files, Dimensional Drawing, Name Plate Diagram, Wiring Diagram, etc.). This means that specific details (receptacles, plugs, wires, connections, mounting brackets, external finishes, etc.) may not be accurately represented in images vs specifications. Please review specifications and do not order based solely on images.

EPNFDS-150A-3P-AUX.1 Explosion Proof Disconnect Switch / Breaker
Listing: NRTL Listed for United States and Canada
Dimensions: 28.28"L x 16.28"W x 12.63"H
Weight: 48 lbs
Configuration: 3-Pole
Voltage Rating: 600V AC Max
Amps: 150A
Fusible: No
Auxiliary Contacts: (1) NO, (1) NC
Materials: Copper-free Aluminum
Hardware Materials: Stainless Steel (Hinges, Cover Bolts)
Mounting: Surface Mount
Hub Qty: 2
Hub Sizes/Locations: (1) 2" NPT (Top), (1) 0.5" NPT (Bottom)
Conduit: Operator Provided
All grounding shall comply with state and local codes and meet the minimum requirements of the National Electronic Code section 250

Features/Ratings
Class I Division 1 & 2 Groups B, C & D
Class I Zones 1 & 2 Groups IIB+ H2 & IIA
Class II Division 1 & 2 Groups E, F & G
Class III, Divisions 1 & 2
NRTL Listed to UL 1203
NRTL Listed to CSA C22.2 No. 30, 25
NEMA 3, 4, 4X, 7 (B, C, D), 9 (E, F, G)

Special Orders - Special Requirements
Contact us for special requirements
Toll Free: 1-800-369-6671
Intl: 1-903-270-1187
Fax: 1-903-498-3364
E-mail: sales@larsonelectronics.com

The Larson Electronics EPNFDS-150A-3P-AUX.1 Explosion Proof 150 amp Non-fused Disconnect Switch provides operators with a Class I and II, Divisions 1 and 2 copper-free aluminum enclosure for overcurrent and short circuit protection of service entrances, feeder or branch circuits, lighting, heating, appliances and motor circuits. This 600V rated explosion proof disconnect switch has a 3-pole configuration and contains the following auxiliary contacts: (1) NO, (1) NC.
PLEASE NOTE: ANY FREE SHIPPING OFFERS DO NOT APPLY TO EXPLOSION PROOF ENCLOSURES

The EPNFDS-150A-3P-AUX.1 explosion proof disconnect switch is made of copper-free aluminum and features a rectangular bolted cover design for uniform and attractive installations. The external on/off lever can be locked into the "off" position with room for up to three padlocks for superior security. The internal circuit breaker handle mechanism is a sliding plate type mounted to the cover. The circuit breaker is trip free of the external handle mechanism. This unit is rated for NEMA 4X environments, making it ideal for indoor and extreme outdoor applications.

Hubs: This power device features one, 2" NPT hub at the top and one, 0.5" NPT hub at the bottom of the explosion proof unit.

Applications: Petroleum refineries, chemical and petrochemical plants, storage areas, and other processing facilities where hazardous substances are handled or stored.

At Larson Electronics, we do more than meet your lighting needs. We also provide replacement, retrofit, and upgrade parts as well as industrial grade power accessories. Our craftsmen can custom build any lighting system and/or accessories to fit the unique demands of your operation. A commitment to honesty, quality, and dependability has made Larson Electronics a leader in the lighting and electronics business since 1973. Contact us today at 800-369-6671 or message sales@larsonelectronics.com for more information about our custom options tailored to meet your specific industry needs.

REV	DESCRIPTION	DATE
A	PRODUCTION RELEASE	08/26/2024

EPNFDS-150A-3P-AUX.1

LARSON ELECTRONICS®

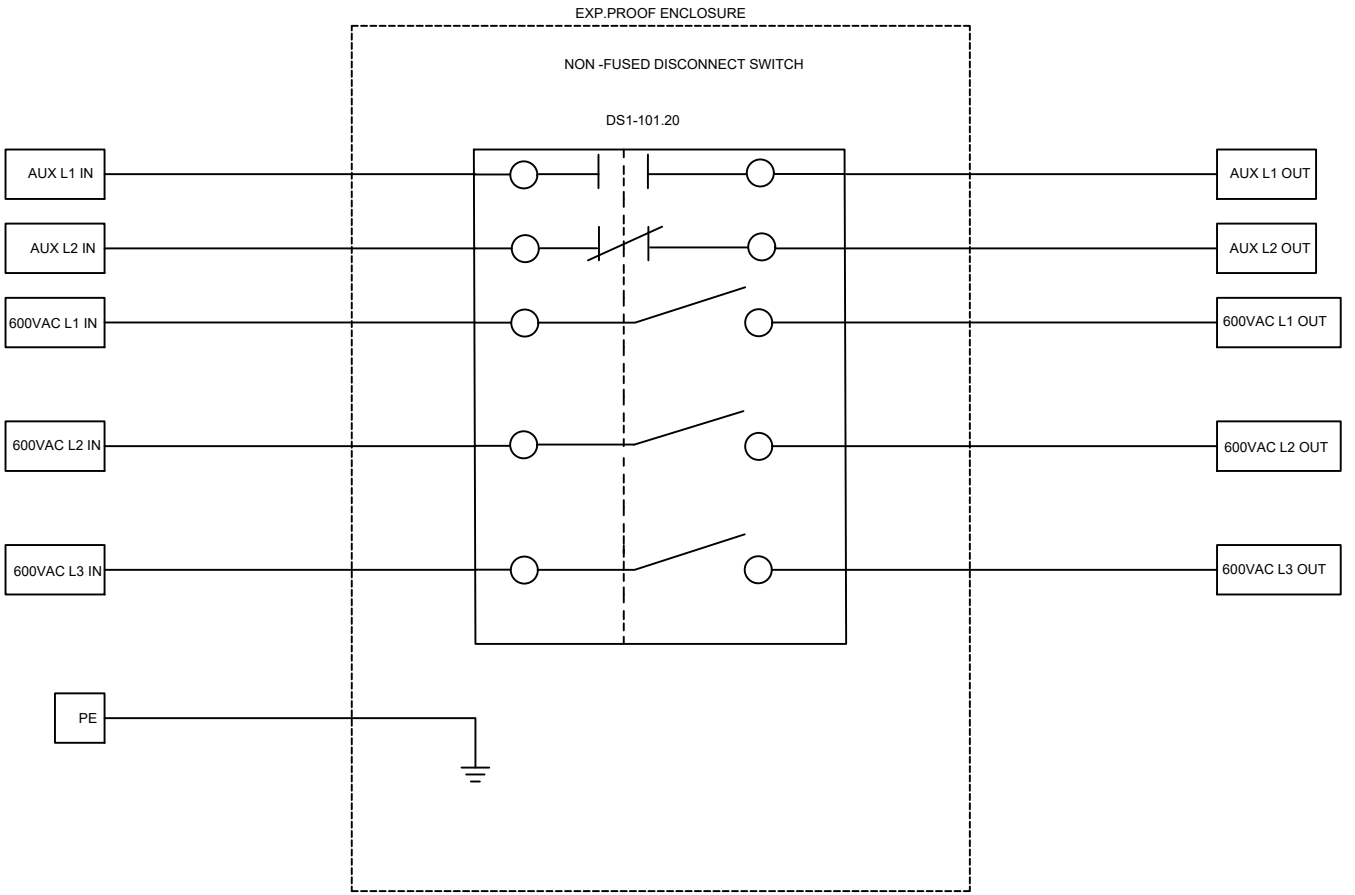

TAGS	QTY	CATALOG	DESCRIPTION
DS1-101.20	1		EXP.PROOF NF DISCONNECT SWITCH 150A,3POLE,600V AC,WITH AUX CONTACT ,NO/NC

LARSON ELECTRONICS
9419 E US HWY 175,
KEMP, TX 75143

TITLE		
EPNFDS-150A-3P-AUX.1		
DRAWN BY: A.HIRSH	DATE: 08/26/2024	REV: A
CHECKED BY: J.Maldonado	SHEET #: 1 OF 1	DRAWING #: 101

OFF
ON
MISTER
LARSON ELECTRONICS
LARSONELECTRONICS.COM
1-800-369-6671
sales@larsonelectronics.com
EPNFDS-100A-3P-AUX.1
A31

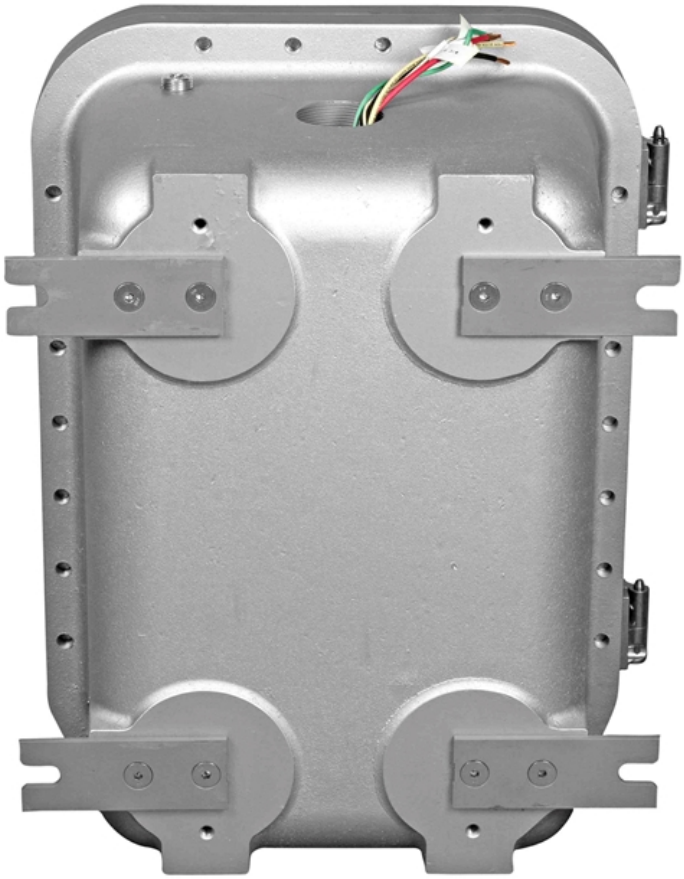

Certification

Manufacturer: Larson Electronics LLC
Address: 9419 US-HWY 175
Kemp, Texas 75143

Declare the following equipment conforms to the standard(s) as listed:

Model: EPNFDS Series
Description: Explosion Proof Non Fused Disconnects and Transfer Switches

Evaluated Listings:

UL: E83969 – NEC / United States standards
CSA: 1723354 – CEC / Canada standards
ATEX: PTB 07 ATEX 04 **–** ATEX standards
IEC Ex: IECEx QPS 17.0014X – IEC Ex / International standards
ETL: Modifications to enclosure under UL 1203, UL 508A – NEC / United States standards
ETL: Modifications to enclosure under CSA C22.2 No. 14, No. 30, No. 25– CEC / Canadian standards

The EPNFDS Series is certified to NEC, CEC, ATEX, and IEC Ex standards for hazardous locations for:

- NEC: Class I, Divisions 1&2, Groups B, C, D; Class II, Divisions 1&2, Groups E, F, G
- NEC: Class I, Zones 1 & 2, Groups IIB + H2, IIA
- CEC: Class I, Divisions 1&2, Groups B, C, D; Class II, Divisions 1&2, Groups E, F, G
- CEC: Class I, Zones 1 & 2, Groups IIB + H2, IIA

The EPNFDS Series is comprised of a Killark EXP or EXBLT series device enclosure. This device enclosure may be modified with custom hub locations and external or internal mounting accessories, custom mounting of electronics, wire connections. This assembly is built to NEC and CEC standards for hazardous locations.

Signed for and on behalf of: Larson Electronics, LLC
Place of issue: Kemp, TX

Signature: James Thomas

Name: James Thomas
Position: Operations Manager

intertek
Total Quality. Assured.

<- Back

Product Description

Title:	INDUSTRIAL CONTROL PANELS
Company:	LARSON ELECTRONICS LLC - Kemp, TX USA
Product Information:	Industrial Control Panels For General Use.
Evaluated to the following:	A representative sample of the listed devices have been tested, investigated and found to comply with the requirements of the Standard(s) for Industrial Control Panels (UL-508A) and are identified with the ETL Listed Mark.

<- Back

Contact Us

ETL listed products that are in doubt or for products that do not appear in the directory, please request a verification of certification.
Americas+1-888-347-5478 (or +1-847-660-7407)
Email etldirectory@intertek.com

Intertek Home
Product Directories
DLP on mobile devices

Inspector Center

Get up-to-date information on everything from our Accreditations to our Certifications and Marks. Learn more...

News

Intertek Unveils New Design for Product Safety and Quality Certification Marks. Learn more...

© 2010 Intertek All Rights Reserved.
All other product or service names are the property of their respective owners.

intertek
Total Quality. Assured.

<- Back

Product Description

Title:	EXPLOSION-PROOF & DUST IGNITION-PROOF ELECTRICAL EQUIPMENT FOR USE IN HAZARDOUS (CLASSIFIED) LOCATIONS
Company:	LARSON ELECTRONICS LLC - Kemp, TX USA
Product Information:	Explosion-proof or dust-ignition-proof Industrial Control Panels for use in Hazardous (Classified) Locations, Model Nos. Custom Industrial Control Panels
Evaluated to the following:	A representative sample of the listed devices have been tested, investigated and found to comply with the requirements of the Standard(s) for Explosion-Proof and Dust Ignition-Proof Electrical Equipment for Use in Hazardous (Classified) Locations (UL-1203) and are identified with the ETL Listed Mark.

<- Back

Contact Us

ETL listed products that are in doubt or for products that do not appear in the directory, please request a verification of certification.
Americas+1-888-347-5478 (or +1-847-660-7407)
Email etldirectory@intertek.com

Intertek Home
Product Directories
DLP on mobile devices

Inspector Center

Get up-to-date information on everything from our Accreditations to our Certifications and Marks. Learn more...

News

Intertek Unveils New Design for Product Safety and Quality Certification Marks. Learn more...

© 2010 Intertek All Rights Reserved.
All other product or service names are the property of their respective owners.

intertek
Total Quality. Assured.

<- Back

Product Description

Title:	INDUSTRIAL CONTROL EQUIPMENT
Company:	LARSON ELECTRONICS LLC - Kemp, TX USA
Product Information:	Industrial Control Panels For General Use. Industrial Control Panels Relating to Hazardous (Classified) Locations, Custom Industrial Control Panels. Power Distribution System, Model Nos. MGL, MPD, MGS series; Followed by AAK-PBB.FFF-SCC.GGG-EEXCCC.DDD; Where AA = 2,3,5,7,9,15,20,25,30,45,50,75; BB = 1P, 3P; FFF = 480,240,208,120; CC = 1P,3P; GGG = 480,240,208,120; EE = # of outlets; CCC = voltage; DDD = outlet amperage.
Evaluated to the following:	A representative sample of the listed devices have been tested, investigated and found to comply with the requirements of the Standard(s) for Industrial Control Equipment (CAN/CSA-C22.2 No. 14) and are identified with the cETL Listed Mark.

<- Back

Contact Us

ETL listed products that are in doubt or for products that do not appear in the directory, please request a verification of certification.
Americas+1-888-347-5478 (or +1-847-660-7407)
Email etldirectory@intertek.com

Intertek Home
Product Directories
DLP on mobile devices

Inspector Center

Get up-to-date information on everything from our Accreditations to our Certifications and Marks. Learn more...

News

Intertek Unveils New Design for Product Safety and Quality Certification Marks. Learn more...

© 2010 Intertek All Rights Reserved.
All other product or service names are the property of their respective owners.

intertek
Total Quality. Assured.

<- Back

Product Description

Title:	ENCLOSURES
Company:	LARSON ELECTRONICS LLC - Kemp, TX USA
Product Information:	Explosion-proof or dust-ignition-proof Industrial Control Panels for use in Hazardous (Classified) Locations, Model Nos. Custom Industrial Control Panels Luminaires, Model Nos. EPL-48-2L-LED-SFC, EPL-24-2L-LED-SFC. for use in Hazardous Locations: Class I, Div. 1, Groups C and D T5 or T6 -20°C < Tamb < 40°C Class II, Div. 1., Groups E, F, and G; Class III Div.1 T3B -20°C < Tamb < 40°C
Evaluated to the following:	A representative sample of the listed devices have been tested, investigated and found to comply with the requirements of the Standard(s) for Enclosures for use in Class II, Groups E, F, G Hazardous Locations (CAN/CSA-C22.2 No. 25) and are identified with the cETL Listed Mark.

<- Back

Contact Us

ETL listed products that are in doubt or for products that do not appear in the directory, please request a verification of certification.
Americas+1-888-347-5478 (or +1-847-660-7407)
Email etldirectory@intertek.com

Intertek Home
Product Directories
DLP on mobile devices

Inspector Center

Get up-to-date information on everything from our Accreditations to our Certifications and Marks. Learn more...

News

Intertek Unveils New Design for Product Safety and Quality Certification Marks. Learn more...

© 2010 Intertek All Rights Reserved.
All other product or service names are the property of their respective owners.

intertek
Total Quality. Assured.

<- Back

Product Description

Title:	EXPLOSION-PROOF ENCLOSURES FOR USE IN CLASS I HAZARDOUS LOCATIONS
Company:	LARSON ELECTRONICS LLC - Kemp, TX USA
Product Information:	Explosion-proof or dust-ignition-proof Industrial Control Panels for use in Hazardous (Classified) Locations, Model Nos. Custom Industrial Control Panels
Evaluated to the following:	A representative sample of the listed devices have been tested, investigated and found to comply with the requirements of the Standard(s) for Explosion-Proof Enclosures for Use in Class I Hazardous Locations (CAN/CSA-C22.2 No. 30) and are identified with the cETL Listed Mark.

<- Back

Contact Us

ETL listed products that are in doubt or for products that do not appear in the directory, please request a verification of certification.
Americas+1-888-347-5478 (or +1-847-660-7407)
Email etldirectory@intertek.com

Intertek Home
Product Directories
DLP on mobile devices

Inspector Center

Get up-to-date information on everything from our Accreditations to our Certifications and Marks. Learn more...

News

Intertek Unveils New Design for Product Safety and Quality Certification Marks. Learn more...

© 2010 Intertek All Rights Reserved.
All other product or service names are the property of their respective owners.

Material Safety Data Sheet

To Whom It May Concern,

The Larson Electronics LLC EPNFDS industrial line of disconnect/transfer switches for hazardous locations are considered "ARTICLES" under 29 CFR 1910-1200, the OSHA Hazard Communication Standard, and do not require a Material Safety Data Sheet (MSDS). This document does not expire.

Articles are specifically exempt from the regulations of this standard. OSHA defines an article as follows:

1910-1200(c) – Article means a manufactured item other than a fluid or particle:

i. Which is formed to a specific shape or design during manufacture;
ii. Which has end use function(s) dependent in whole or in part upon its shape or design during end use; and
iii. Which under normal conditions does not release more than very small quantities.

The "hazardous location" and "explosion proof" are terminology for the environment where these products will be installed. This is not to be confused with "hazardous materials;" this product does not contain any hazardous materials.

Regards,

Ray Smith

Ray Smith
Larson Electronics, LLC.

LARSON ELECTRONICS LLC • 9419 E US HWY 175 • KEMP, TX 75143
p: 1-800-369-6671 • intl: 903-498-3363 • f: 903-498-3364 • sales@larsonelectronics.com

CERTIFICATE OF COMPLIANCE

Certificate Number	20170907-E83969
Report Reference	E83969-19871112
Issue Date	2017-SEPTEMBER-07
Issued to:	KILLARK, DIV OF HUBBELL INC (DELAWARE) 3940 MARTIN LUTHER KING DR ST LOUUIS MO 63113
This is to certify that representative samples of	Enclosures for Use in Class I, Groups B, C, and D; Class II, Groups E, F and G, Models EXB and EXBLT, followed by P or C, followed by three numbers, may be followed by -N34, -SPM, -MOD, -N4, -N4X, and/or -N4XTL. Have been investigated by UL in accordance with the Standard(s) indicated on this Certificate.
Standard(s) for Safety:	UL 1203, Explosion-Proof and Dust-Ignition-Proof Electrical Equipment for Use in Hazardous (Classified) Locations. CSA C22.2 No. 25-M1966, Enclosures for Use in Class II Groups E, F, and G Hazardous Locations (R2014). CAN/CSA C22.2 No. 30-M1986, Explosion-Proof Enclosures for Use in Class I Hazardous Locations
Additional Information:	See the UL Online Certifications Directory at www.ul.com/database for additional information

Only those products bearing the UL Certification Mark should be considered as being covered by UL's Certification and Follow-Up Service.

Look for the UL Certification Mark on the product

Bruce Mahrenholz, Director North American Certification Program

UL LLC

Any information and documentation involving UL Mark services are provided on behalf of UL LLC (UL) or any authorized licensee of UL. For questions, please contact a local UL Customer Service Representative at http://ul.com/aboutul/locations/

Certificate of Compliance

Certificate: 1723354 **Master Contract:** 151933

Project: 80001569 **Date Issued:** 2019-05-21

Issued To: **Killark, Div of Hubbell Inc. (Delaware)**
3940 Dr. Martin Luther King Dr.
St. Louis, Missouri, 63113
United States

Attention: Thomas J. Michalski

The products listed below are eligible to bear the CSA Mark shown with adjacent indicators 'C' and 'US' for Canada and US or with adjacent indicator 'US' for US only or without either indicator for Canada only.

C US

Issued by: *Domenic Somma*
Domenic Somma

PRODUCTS

CLASS - C321802 - INDUSTRIAL CONTROL EQUIPMENT Motor Controllers - Auxiliary Devices-For Hazardous Locations
CLASS - C321882 - INDUSTRIAL CONTROL EQUIPMENT-Motor Controllers-Auxiliary Devices For Hazardous Locations-Certified to U.S. Standards

Class I, Div. 1, Groups B, C and D; Class II, Div. 1, Groups E, F and G; Class III, Div. 1; Encl. Types 3 and 4 (where applicable).

Control stations, Series EXB, with or without auxiliary devices (91 max) and/or rectangular or round windows, Series Cat Nos: EXB-664, -684, -6124, -886, -8104, -8106, -8126, -8128, -10106, -10108, -10146, -10148, -12126, -12128, -12186, -12188, -12246, -12248, -122412, -12368, -123610, -14146, -14148, -16166, -16168, -16248, -162410, -18186, -18188, -18248, -182410, -18308 -18368, -183610, -203611, -24248, -242410, -24368, -243610 and 24308; max conduit size 6 in.

© 2018 CSA Group. All rights reserved.

Certificate: 1723354 **Master Contract:** 151933
Project: 80001569 **Date Issued: 2019-05-21**

Control stations, Series EXBLT, with or without auxiliary devices (91 max) and/or rectangular or round windows, Series Cat Nos: EXBLT-664, -684, -686, -6124,-6126, -886, -8104, -8106, -8126, -8128,-9116, -10106, -10108, -10146, -10148, -12126, -12128, **12186, -12188, -12246, -12248, -122412, -14146, -14148, -14248, -14308, -16166, -16168, -16248, -162410;** max conduit size 6 in.

Notes:

1. Series EXB and EXBLT control stations may be furnished with blank mounting pans and Certified terminal blocks (secured to mounting pan).

2. Control stations are equipped with hinged covers.

3. Control stations may be provided with submittor's Certified Series "G" auxiliary devices (eg. pushbuttons, pilot lights, selector switches etc.) rated 600V max.

4. Instruction sheets packed with each unit.

5. Series EXB and EXBLT control station when followed with suffix N34 denotes Encl. Types 3 and 4.

6. The overall hazardous location designation is governed by the lowest hazardous location rating of any auxiliary device used.

1. Series EXB Control station may be provided with rectangular (9 x 9 in) max or round (7-3/4 in max) window(s) viewing area on the cover.

APPLICABLE REQUIREMENTS

CAN/CSA-C22.2 No 0-10	-	General Requirements
CAN/CSA-C22.2 No. 14-M91	-	Industrial Control Equipment
CSA Std C22.2 No. 25-1966 (R2009)	-	Enclosures for Use in Class II, Groups E, F and G Hazardous Locations
CSA Std C22.2 No. 30-M1986(R2012)	-	Explosion-Proof Enclosures for Use in Class I Hazardous Locations
C22.2 No. 94.1-07(R2012)	-	Enclosures for Electrical Equipment, Non-Environmental Considerations
C22.2 No. 94.2-07(R2012)	-	Enclosures for Electrical Equipment, Environmental Considerations
ANSI/UL 1203 Ed 5	-	Explosion-Proof and Dust-Ignition-Proof Electrical Equipment For use in Hazardous (Classified) Locations
UL50 (Ed 12)	-	Enclosures for Electrical Equipment, Non-Environmental Considerations

© 2018 CSA Group. All rights reserved.

UL50E (Ed 1)	-	Enclosures for Electrical Equipment, Environmental Considerations
UL Standard 508	-	Electric Industrial Control Equipment

MARKINGS

The manufacturer is required to apply the following markings:

- Products shall be marked with the markings specified by the particular product standard.
- Products certified for Canada shall have all Caution and Warning markings in both English and French.

Additional bilingual markings not covered by the product standard(s) may be required by the Authorities Having Jurisdiction. It is the responsibility of the manufacturer to provide and apply these additional markings, where applicable, in accordance with the requirements of those authorities.

The products listed are eligible to bear the CSA Mark shown with adjacent indicators 'C' and 'US' for Canada and US (indicating that products have been manufactured to the requirements of both Canadian and U.S. Standards) or with adjacent indicator 'US' for US only or without either indicator for Canada only.

- The CSA Mark with the C US qualifier adjacent to the CSA Mark
- Company name/logo or CSA File No.
- Hazardous location designation;
- Catalogue number, style, or designation;
- Complete electrical ratings (If equipped with control devices).
- Date code and/or serial number
- Enclosure Types 3 and or 4 (where applicable)

BILINGUAL CAUTIONS:

- " A SEAL SHALL BE INSTALLED WITHIN 18 INCHES OF THE ENCLOSURE."
- "UN SCELLEMENT DOIT ETRE INSTALLE A MOINS DE 18 POUCES DU BOITIER."
- "COVER JOINTS MUST BE CLEANED BEFORE REPLACING COVER." "NETTOYER LES SURFACES DE CONTACT DU COUVERCLE AVANT DE LE REMETTRE EN PLACE."
- "KEEP COVER TIGHT WHILE CIRCUITS ARE ALIVE." "GARDER LE COUVERCLE BIEN FERME TANT QUE LES CIRCUITS SONT SOUS TENSION."

- Caution "WARNING: MORE THAN ONE LIVE CIRCUIT SEE DIAGRAM" and "AVERTISSEMENT: CET EQUIPMENT REN-FERME PLUSIEURS CIRCUITS SOUS TENSION VOIR LE SCHEMA". (If equipped with control devices)
- To prevent external fire or explosion, do not connect to a circuit capable of delivering more than 10,000 RMS symmetrical amperes

Markings shall appear on a metal nameplate at least 0.02 in thick, permanently attached to the enclosure by means of drive screws or pins.

 © 2018 CSA Group. All rights reserved.

Supplement to Certificate of Compliance

Certificate: 1723354 **Master Contract:** 151933

The products listed, including the latest revision described below, are eligible to be marked in accordance with the referenced Certificate.

Product Certification History

Project	Date	Description
80001569	2019-05-21	Update to Certificate 1723354, CPB 70172604 to expand Series EXBLT Explosion Proof Enclosures sizes EXBLT-12186 to 162410 for use in Class I, Div. 1, Groups B, C and D; Class II, Groups E, F and G; Class III; Enclosure Types 3 and 4 (where applicable).
000070172604	2018-03-02	Update to Certificate Report 1723354 (CPB 70010980)to cover alternate construction of Series EXB enclosures having thinner walls.
000070010980	2014-11-06	UPDATE TO CERTIFICATE 1723354 (PROJECT BIN 70007902) TO ADD ALTERNATE CEMENT FOR THE LENS TO COVER JOINTS FOR SERIES EXB CONTROL STATIONS.
0002205523	2010-02-02	Update to certificate 1723354 to add Control Station EXB-24308 and Round Windows Type GL 537, GL 600 & GL 775 for use in Cl. I, Gr. B, C & D; CL. II, Gr. E, F & G; CL. III
0002189800	2009-07-15	Update to certificate 1723354 to add US requirements to Control Station Series EXB for use in Cl. I, Gr. B, C & D; CL. II, Gr. E, F & G; CL. III
0002161864	2009-04-08	Update to certificate 1726654 to add Control Station EXB-18308 for use in CI.I, Gr.B, C & D; CL. II, Gr.E, F & G, CL. III
0001723354	2005-12-06	Update to Report LR11714-65 to add Control Stations Series Cat. No EXB-684 and -6124

© 2018 CSA Group. All rights reserved.

Certification

Manufacturer: Larson Electronics LLC
Address: 9419 US-HWY 175
Kemp, Texas 75143

Declare the following equipment conforms to the standard(s) as listed:

Model: EPNFDS Series
Description: Explosion Proof Non Fused Disconnects and Transfer Switches

Evaluated Listings:

CE: DIRECTIVE 2014/35/EU - LOW VOLTAGE DIRECTIVE
CE: DIRECTIVE 2014/30/EU - EMC DIRECTIVE
CE: Regulation (EC) No 1907/2006 - REACH REGULATION
CE: DIRECTIVE 2015/863/EU - ROHS DIRECTIVE

The EPNFDS series complies with the essential protection requirements of the European Parliament of the Council Directive for Low Voltage Directive, EMC Directive, REACH Regulation, and RoHS Directive. This certification applies to all specimens manufactured in accordance to the manufacture's drawings.

Signed for and on behalf of: Larson Electronics, LLC
Place of issue: Kemp, TX

Signature: James Thomas

Name: James Thomas
Position: Operations Manager

Certification

Manufacturer: Larson Electronics LLC
Address: 9419 US-HWY 175
Kemp, Texas 75143

Declare the following equipment conforms to the standard(s) as listed:

Model: EPNFDS Series
Description: Explosion Proof Non Fused Disconnects and Transfer Switches

Evaluated Listings:

CE: DIRECTIVE 2015/863/EU - ROHS DIRECTIVE

This is to certify that products offered by Larson Electronics LLC comply with the Reduction of Hazardous Substances (RoHS) directives. Directive 2002/95/EC became effective on 1 July 2006. It restricts the use of six substances in the manufacture of electrical and electronic equipment. This directive was revised in June 2011 and is now referred to as directive 2011/65/EU. Directive 2015/863/EU amending Annex II to Directive 2011/65/EU announced plans to add four substances from 22 July 2019.

We hereby certify that the equipment specified above conforms to the Directive(s) by containing less of the restricted substances than the stated limits.

Signed for and on behalf of: Larson Electronics, LLC
Place of issue: Kemp, TX

Signature: James Thomas

Name: James Thomas
Position: Operations Manager

Certification

Manufacturer: Larson Electronics LLC
Address: 9419 US-HWY 175
Kemp, Texas 75143

Declare the following equipment conforms to the standard(s) as listed:

Model: EPNFDS Series
Description: Explosion Proof Non Fused Disconnects and Transfer Switches

Evaluated Listings:

CE: Regulation (EC) No 1907/2006 - REACH REGULATION

This letter establishes the opinion of Larson Electronics LLC regarding the status, under the current European Union ("EU") Regulations on Registration, Evaluation, Authorization, and Restriction of Chemical Substances ("REACH").

REACH does not apply to manufactured products which are referred to as "completed articles". Substances (chemicals) are subject to REACH registration, NOT products.

In addition, Articles are exempt from the REACH requirements if (a) the Article does not contain a substance of very high concern or candidate substance in an amount exceeding 0.1% weight by weight, and (b) if substances present in the Article in excess of 1 ton per year per importer are not expected nor intended to be released.

Based on communication with our raw material suppliers, we conclude that to the best of our knowledge our products requiring REACH compliance do not contain any of the currently listed SVHC in concentrations of 0.1% or above.

Accordingly, we foresee no registration or pre-registration requirement for the products we supply.

Signed for and on behalf of: Larson Electronics, LLC
Place of issue: Kemp, TX

Signature: James Thomas

Name: James Thomas
Position: Operations Manager

Frequently Asked Questions (FAQ)