Larson Electronics LLC
9419 E US HWY 175, Kemp, TX 75143
Phone: 800.369.6671

www.LarsonElectronics.com
Email: sales@LarsonElectronics.com
Fax: 903.765.7664

## EXP-SNR-FSS-AFPS-R1

# 7.4A Explosion Proof Air Flow Switch - C1D1/C2D1, 120V and 240V AC - Medium Velocity

**Product ID: 273416**



Image: EXP-SNR-FSS-AFPS-R1

**Larson Electronics LLC manufactures a wide variety of products, including custom built to spec designs. The pictures displayed for this unit are a general representation of form factor for the product line and may not accurately represent this exact configuration in every detail due to custom builds and changes between similar products in our standard catalog. The specifics for this configuration are listed in the specification table and supporting documentation (CAD files, Dimensional Drawing, Name Plate Diagram, Wiring Diagram, etc.). This means that specific details (receptacles, plugs, wires, connections, mounting brackets, external finishes, etc.) may not be accurately represented in images vs specifications. Please review specifications and do not order based solely on images.**

**EXP-SNR-FSS-AFPS-R1 - Explosion Proof Air Flow Switch**
**Listing:** NRTL Listed for United States and Canada
**Dimensions:** 13.58"L x 2.5"W x 3.34"H
**Weight:** 6 lb
**Voltage Rating:** 120 V and 240 V AC
**Frequency Rating:** 50/60 Hz
**Current Rating:** 7.4A @ 120 V AC; 3.6A @ 240 V AC
**Locked Rotor:** 44.4A @ 120 V AC; 22.2A @ 240 V AC
**Pilot Duty:** 125 VA @ 120V or 240V 50/60 Hz
**Switch Type:** Medium Velocity
**Paddle Compatibility:** 8" Minimum Duct Size
**Flow Rate, Top Mounting:** 300-1900 FPM Flow, 100-500 FPM No Flow
**Flow Rate, Side Mounting:** 350-1900 FPM Flow, 100-900 FPM No Flow
**Maximum Airflow Velocity:** 1900 FPM
**Snap Switch Type:** SPDT
**Duct Temperature:** 275°F (135°C) Max
**Ambient Operating Temperature:** 120°F (49°C) Max
**Materials:** Brass, Steel and Aluminum
**Mounting:** Horizontal or Vertical Duct Mount
**Connection:** 1/2" NPT

**Ratings/Approvals**
Class I, Division 1 Groups C,D
Class II, Division 1 Groups E,F,G
NEMA 7, 9

**Special Orders - Special Requirements**
Contact us for special requirements
**Toll Free:** 1-800-369-6671
**Intl:** 1-903-270-1187
**Fax:** 1-903-765-7664
**E-mail:** sales@larsonelectronics.com

**The EXP-SNR-FSS-AFPS-R1 from Larson Electronics is an Explosion Proof Air Flow Switch for medium velocity applications in combustible sites. This unit is compatible with 120V and 240V AC. Designed for horizontal or vertical duct mounting installations, the air flow switch is rated for Class I, Division 1 and Class II, Division 1 locations.**

The EXP-SNR-FSS-AFPS-R1 can be used for equipment control in hazardous areas. This explosion proof switch is rated for 120V and 240V AC with 125 VA pilot duty. The unit is equipped with a single pole, double throw snap switch. Operators can adjust flow velocities using an adjustment screw on the side of the device (factory set to minimum).

Constructed of brass, steel and aluminum, the explosion proof switch is NEMA 7/9 rated for durability in rugged work areas. The device is suitable for horizontal or vertical duct mounting and features 1/2" NPT conduit connection.

At Larson Electronics, we do more than meet your lighting needs. We also provide replacement, retrofit, and upgrade parts as well as industrial grade power accessories. Our craftsmen can custom build any lighting system and/or accessories to fit the unique demands of your operation. A commitment to honesty, quality, and dependability has made Larson Electronics a leader in the lighting and electronics business since 1973. Contact us today at 800-369-6671 or message sales@larsonelectronics.com for more information about our custom options tailored to meet your specific industry needs.

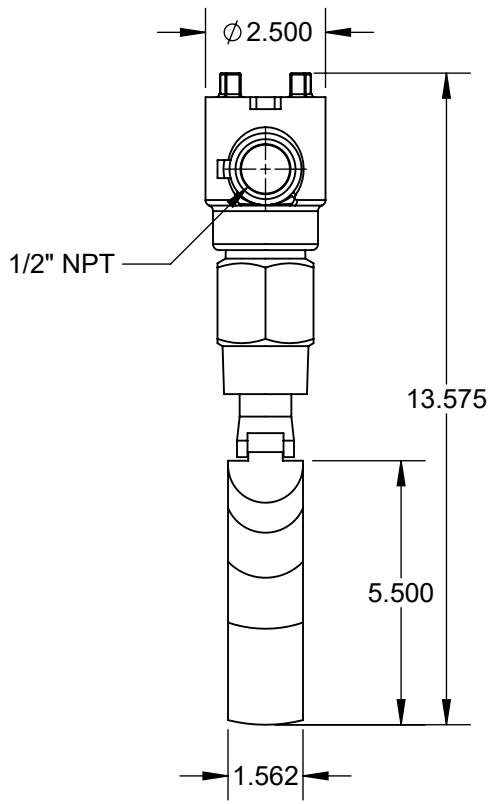


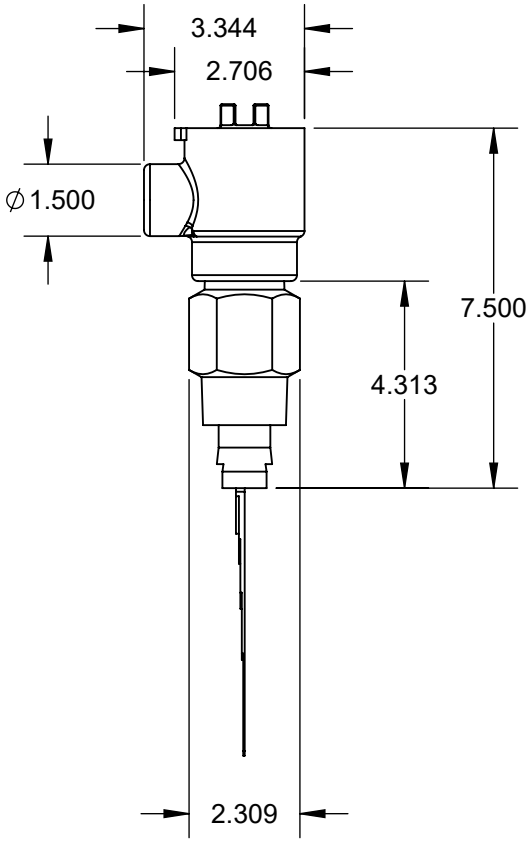


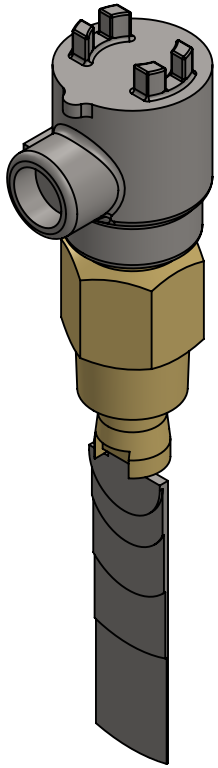

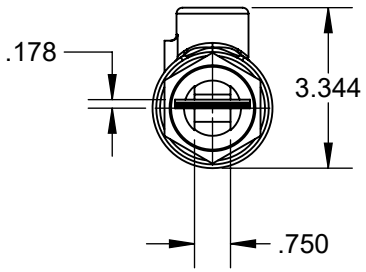


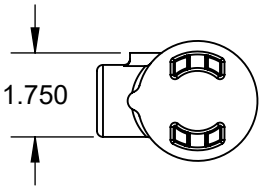


LARSON ELECTRONICS®

**PART NUMBER:**
# EXP-SNR-FSS-AFPS-R1

| SIZE | | REV |
|---|---|---|
| A | | 1 |

| | | | | |
|---|---|---|---|---|
| DIMENSIONS ARE IN INCHES | | | | |
| DO NOT SCALE DRAWING | DATE | 10/6/2026 | SCALE: NTS | SHEET 1 OF 1 |

**PROPRIETARY AND CONFIDENTIAL**
THE INFORMATION CONTAINED IN THIS DRAWING IS THE SOLE PROPERTY OF LARSON ELECTRONICS LLC. ANY REPRODUCTION IN PART OR AS A WHOLE WITHOUT THE WRITTEN PERMISSION OF LARSON ELECTRONICS LLC IS PROHIBITED.

Larson Electronics LLC
9419 E US HWY 175, Kemp, TX 75143
Phone: 800.369.6671

www.LarsonElectronics.com
Email: sales@LarsonElectronics.com
Fax: 903.765.7664

# Frequently Asked Questions (FAQ)

There are no Faqs