Larson Electronics LLC
9419 E US HWY 175, Kemp, TX 75143
Phone: 800.369.6671

www.LarsonElectronics.com
Email: sales@LarsonElectronics.com
Fax: 903.498.3364

MT-CTX-600V-150VA-240V

0.15 kVA (150 VA) Control Transformer - 600V Primary - 240V Secondary - 50/60 Hz

Product ID: 271460

Image: MT-CTX-600V-150VA-240V

Larson Electronics LLC manufactures a wide variety of products, including custom built to spec designs. The pictures displayed for this unit are a general representation of form factor for the product line and may not accurately represent this exact configuration in every detail due to custom builds and changes between similar products in our standard catalog. The specifics for this configuration are listed in the specification table and supporting documentation (CAD files, Dimensional Drawing, Name Plate Diagram, Wiring Diagram, etc.). This means that specific details (receptacles, plugs, wires, connections, mounting brackets, external finishes, etc.) may not be accurately represented in images vs specifications. Please review specifications and do not order based solely on images.

MT-CTX-600V-150VA-240V Control Transformer

Phase: Single Phase
Frequency: 50/60 Hz
kVA: 150 VA (0.15 kVA)
Primary Voltage: 600 V
Primary Connection: Series (V)
Primary FCAN (Std.): 0 x 0%
Primary FCBN (Std.): 0 x 0%
Secondary Voltage: 240 V
Secondary Connection: Parallel x Series (Vx2V)
Material: Copper
Primary Termination: Terminal Block
Secondary Termination: Terminal Block
Insulation: 130°C
Temperature Rise: 80°C
Enclosure Material: Injection Molded Cover
Mounting: Heavy Steel Feet
Dimensions: 3.94"-L x 3.78"-W x 3.74"-H
Weight: 5.75 lb

Approvals/Ratings

NRTL Listed for United States and Canada
NRTL Certified to CSA 22.2 NO 66.1
NRTL Certified to CSA 22.2 NO 66.2
NRTL Certified to UL 5085-1
NRTL Certified to 5085-2
Control Transformer

Special Orders - Special Requirements

Contact us for special requirements
Toll Free: 1-800-369-6671
Intl: 1-903-270-1187
E-mail: sales@larsonelectronics.com

The MT-CTX-600V-150VA-240V from Larson Electronics is a 600 V Single Phase Control Transformer that is powerful, reliable and innovatively designed. With high-quality silicon steel laminations providing optimal performance, the MT-CTX-600V-150VA-240V provides increased reliability and protection against critical equipment failures. This

control transformer features an innovative design with a unique terminal block design that allows for a quick and easy hook up along with the ability to easily install fuse clips to the unit. The uniquely designed molded coil covers give this control transformer superior cooling abilities and a sleek appearance.

Transformer Features: With a transformer rating of 150 VA (0.15 kVA), the MT-CTX-600V-150VA-240V is a machine tool industrial single phase control transformer with primary voltages of 600 V. It also provides a secondary voltage of 240 V. Featuring compact and innovative construction, this unit`s cores are manufactured with high-quality silicon steel laminations using state of the art technology.

This unit boasts an innovative terminal block design that allows for easy hookup. Connecting this unit is a simple task thanks to the terminal connection numbers being molded into the terminal block which corresponds to the nameplate and wiring diagrams. A unique fin-shaped, injection molded coil cover gives this unit superior cooling abilities. The unit also features a 130°C insulation class with a 80°C temperature rise.

Benefits: The MT-CTX-600V-150VA-240V control transformer offers many benefits to the consumer. Full encapsulation of the windings and internal terminations ensures that the unit is protected from moisture, dirt, dust and other contaminants. Removeable finger safe terminal covers contribute towards the overall clean and sleek look of the unit. The compact and innovative design features make this a great choice for industrial tool applications.

This control transformer has heavy steel mounting feet that are either welded or bolted to the core. This transformer features terminal block terminations.

Applications: Power Managment, Industrial

Larson Electronics is a manufacturer and as such can build stationary and portable transformer systems to your specifications. Although we carry several models of power distribution transformer systems, we can deliver custom ordered units almost as quickly as our prebuilt units. If this model does not meet your needs, please contact us at 1-800-369-6671 or sales@larsonelectronics.com to discuss your specific requirements.

Wiring Diagram

WARNING: *DO NOT SERVICE WHILE ENERGIZED!*

MT-CTX-600V-150VA-240V

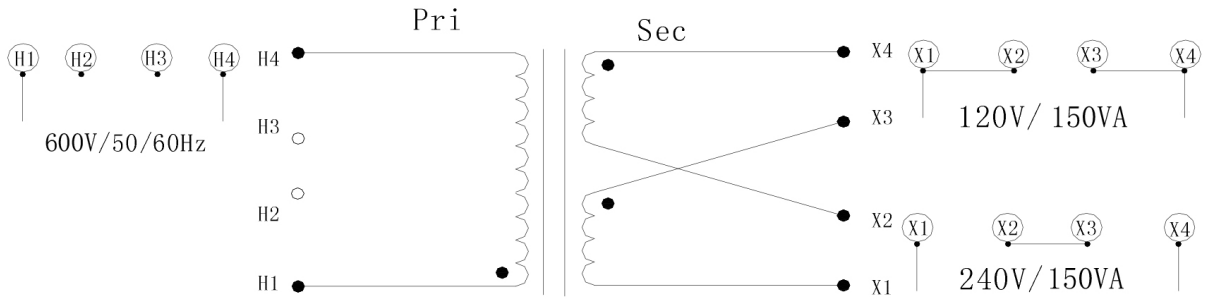

LARSON ELECTRONICS LLC • 9419 E US HWY 175 • KEMP, TX 75143
p: 1-800-369-6671 • intl: 903-498-3363 • f: 903-498-3364 • sales@larsonelectronics.com

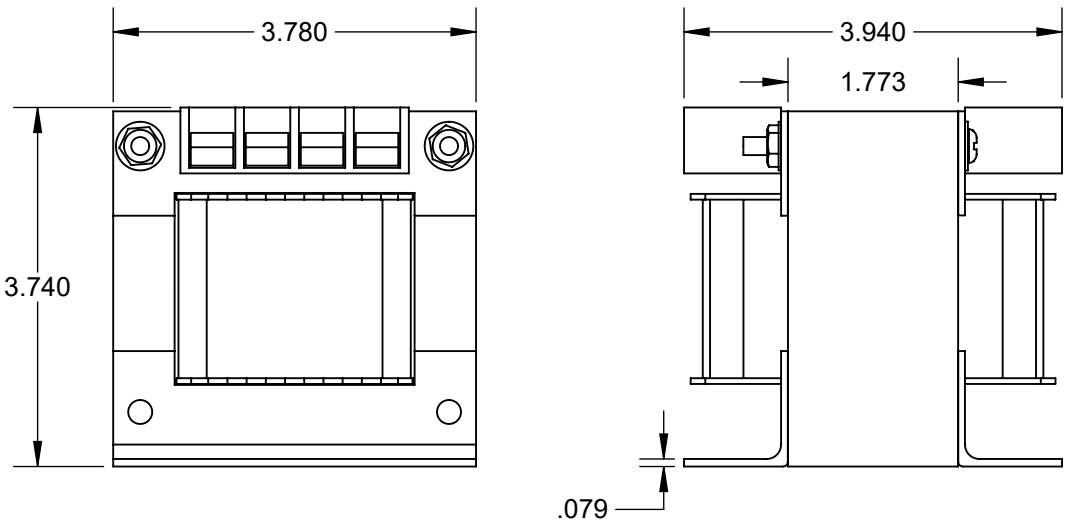

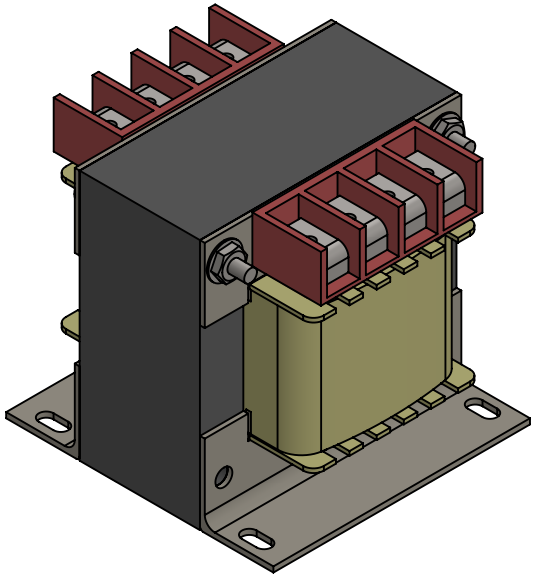

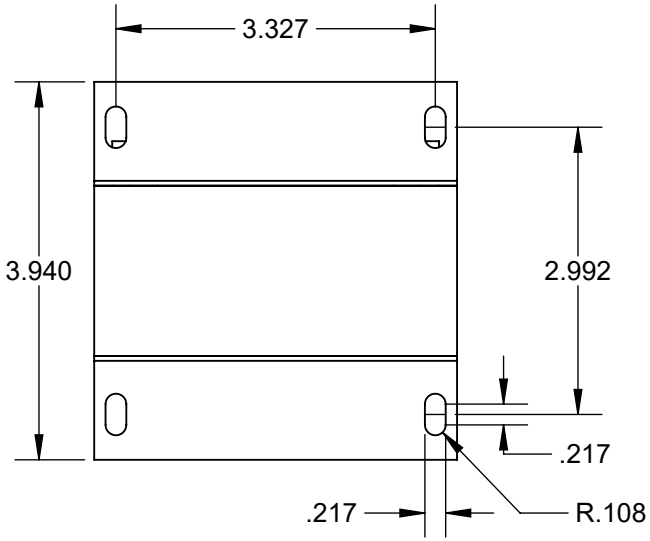

LARSON ELECTRONICS®

PART NUMBER:

MT-CTX-600V-150VA-240V

SIZE		REV
A		1

DIMENSIONS ARE IN INCHES				
DO NOT SCALE DRAWING	DATE	6/12/2025	SCALE: NTS	SHEET 1 OF 1

PROPRIETARY AND CONFIDENTIAL

THE INFORMATION CONTAINED IN THIS DRAWING IS THE SOLE PROPERTY OF LARSON ELECTRONICS LLC. ANY REPRODUCTION IN PART OR AS A WHOLE WITHOUT THE WRITTEN PERMISSION OF LARSON ELECTRONICS LLC IS PROHIBITED.

Larson Electronics LLC
9419 E US HWY 175, Kemp, TX 75143
Phone: 800.369.6671

www.LarsonElectronics.com
Email: sales@LarsonElectronics.com
Fax: 903.498.3364

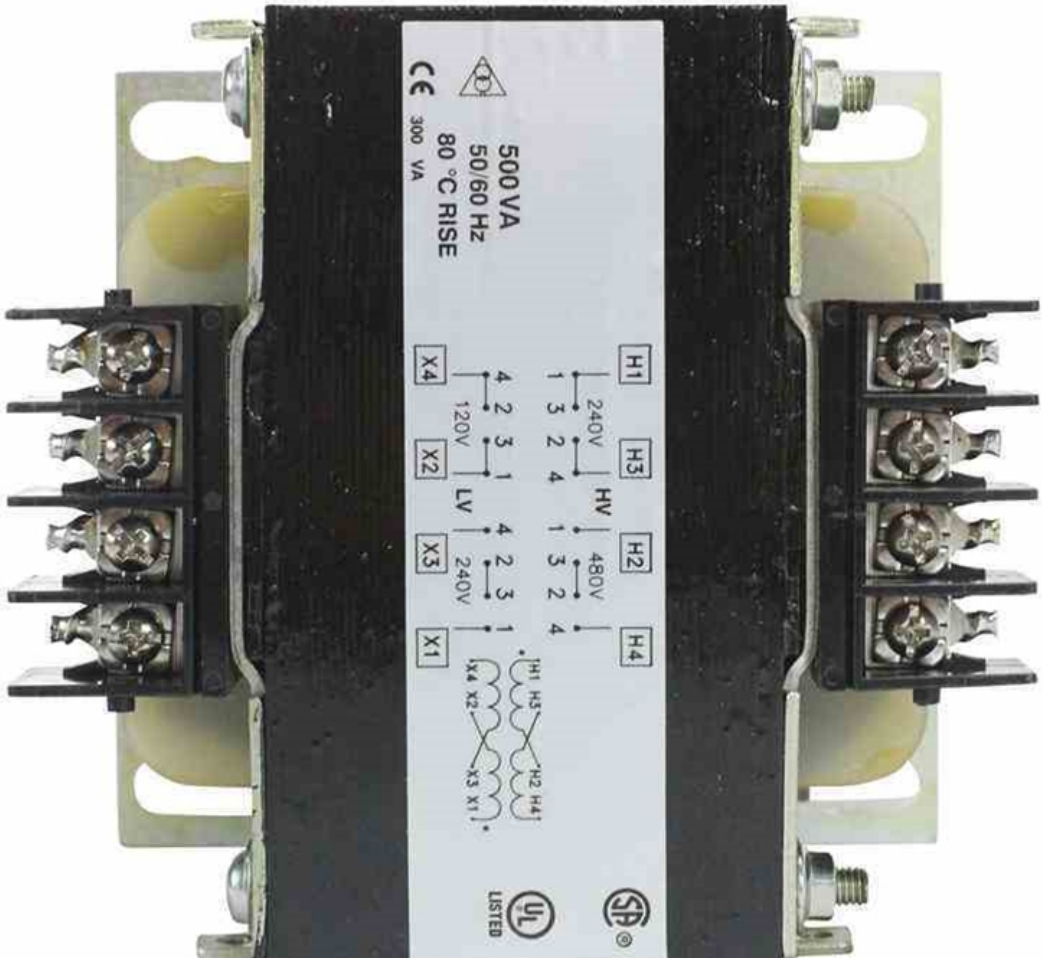

Larson Electronics LLC
9419 E US HWY 175, Kemp, TX 75143
Phone: 800.369.6671

www.LarsonElectronics.com
Email: sales@LarsonElectronics.com
Fax: 903.498.3364

Larson Electronics LLC
9419 E US HWY 175, Kemp, TX 75143
Phone: 800.369.6671

www.LarsonElectronics.com
Email: sales@LarsonElectronics.com
Fax: 903.498.3364

Larson Electronics LLC
9419 E US HWY 175, Kemp, TX 75143
Phone: 800.369.6671

www.LarsonElectronics.com
Email: sales@LarsonElectronics.com
Fax: 903.498.3364

Larson Electronics LLC
9419 E US HWY 175, Kemp, TX 75143
Phone: 800.369.6671

www.LarsonElectronics.com
Email: sales@LarsonElectronics.com
Fax: 903.498.3364

Frequently Asked Questions (FAQ)

There are no Faqs