Larson Electronics LLC
9419 E US HWY 175, Kemp, TX 75143
Phone: 800.369.6671

www.LarsonElectronics.com
Email: sales@LarsonElectronics.com
Fax: 903.498.3364

IND-CBE-UVC-60-18X18-R3-120V-25C

720W UV Disinfection Conveyor Oven - 120V, 60Hz - (6) 48" UVC Lamps, UV Shield - Variable Speed/25' Cord

Product ID: 271416



Larson Electronics LLC manufactures a wide variety of products, including custom built to spec designs. The pictures displayed for this unit are a general representation of form factor for the product line and may not accurately represent this exact configuration in every detail due to custom builds and changes between similar products in our standard catalog. The specifics for this configuration are listed in the specification table and supporting documentation (CAD files, Dimensional Drawing, Name Plate Diagram, Wiring Diagram, etc.). This means that specific details (receptacles, plugs, wires, connections, mounting brackets, external finishes, etc.) may not be accurately represented in images vs specifications. Please review specifications and do not order based solely on images.

This unit is Made In USA - Manufactured in Texas

IND-CBE-UVC-60-18X18-R3-120V-25C UV Sanitation Conveyor System

Lamp Technology: UV-C Fluorescent
Lamp Qty: (6) 48" (1 On Each Side, 2 On Top, 2 On Bottom)
Overall Dimensions: 86.263"-L x 23.00"-W x 38.00"-H
Conveyor Length: 52"-L
Maximum Package Dimensions: 18"W x 18"H
Weight: -
Voltage: 120 V AC, 60 Hz
Phase: 1-Phase
Total Watts: 960W
Total Lamp Watts: 720W
Single-lamp Watts: 120W
Total UV Output: 159.6W
Single-lamp UV Output: 26.6W
Effective UV Radiation (at 1 Meter) Per Lamp: 240.0 uW/cm2 @ 1M
Total Effective UV Radiation (at 1 Meter): 1440.0 uW/cm2 @ 1M
Expected Lifespan: 8,000+ Hours
UV Wavelength: UV-C, 200nm - 280nm (254 nm)
Lamp Type: T8
Lamp Base: G13 (Medium Bi-pin)
Replacement Lamp: FRL-48-1X-T8HO-120W-UV-C
Beam Angle: 360°
Light Configuration: Flood
Sanitation Duration: 60 Seconds
Conveyor Belt Speed: Variable
Activation: On/Off Switch for Lamps and Motor
Safety: Adjustable UV Shields
Amps: 2.45 A @ 120 V

Ratings/Features

UV Oven
Short-wave Germicidal Light
Kills 99% of Viruses and Other Germs
Variable Speed Controller
Made in USA - Manufactured in Texas
EPA Reg. No 98409-1
EPA Est. No. 98409-TX-1

Ambient Operating Temp Range: -
Materials: 304 Stainless Steel
Lens Material: -
Mounting: Rubber Feet
Wiring: 25' Cord w/ Cord Cap
Cord Cap Options: 5-15 Straight, L5-15 Twist, or Pigtail
PLEASE NOTE: UV-C light can cause temporary or permanent loss of vision, and temporary acute redness or ulceration (mild to severe sunburn) to exposed skin. To prevent exposure, do not operate the device in any application that allows UV-C light to be visible during operation. NEVER LOOK DIRECTLY AT THE BULB OR DISINFECTING TARGET ZONE. DO NOT touch bulb with bare hands. The oils in your skin will damage the lamp. Fingerprints will result in reduced performance and significantly reduce the lifespan of the lamp unless they are removed with alcohol. Please read instruction manual for UV safety requirements before operating.

Special Orders - Special Requirements
Contact us for special requirements
Toll Free: 1-800-369-6671
Intl: 1-903-270-1187
Fax: 1-903-498-3364
E-mail: sales@larsonelectronics.com

This unit is Made In USA - Manufactured in Texas

The Larson Electronics IND-CBE-UVC-60-18X18-R3-120V-25C UV Disinfection Conveyor Oven sanitizes products, packages, equipment, and more. It is ideal for putting into use at package processing areas, receiving stations, warehouses, and more. Equipped with six 120W UV lamps, the unit offers UV-C output at a range of 200nm - 280nm (254nm). This system sanitizes packages up to 18" tall by 18" wide in 60 seconds. Protected by a 304 stainless steel housing, the UV oven operates on single-phase 120 V and comes with a 25` cord terminated in a 120 V cord cap.

Please note: This product produces UV light. Make sure to follow all safety guidelines and protocols found in the user manual. UVC light in the proper setting kills up to 99.9% of viruses, mold, spores, and bacteria. Click here to learn more about UVC and the coronavirus*

The IND-CBE-UVC-60-18X18-R3-120V-25C is a powerful sanitation solution for handling large amounts of products, packages, equipment, catalogs, mail, and other items that are 18" x 18" or less in size. Equipped with six 120W UVC fluorescent lamps, this system offers UV output within the 200nm - 280nm UV-C range (254 nm). The lights have an expected lifespan of 8,000+ hours and emit a flood beam pattern with 360 degrees of coverage. Inside the UV oven, the lamps take on the following configuration: (1) 48" UV bulb on each side, (2) 48" UV bulbs on the top, and (2) 48" UV bulbs on the bottom for all around coverage. Adjustable UV shields located at both ends are available for UV protection. The components are designed to reduce stray UV light during treatment. We offer bolt-on plastic strip door curtains for variable height processing at an additional cost. The single-speed system is protected by a 304 stainless steel housing.

Operation: Start the UV sanitation system by setting the speed using the variable speed controller and then by pressing the on/off button for the lamps and motors. Next, load "dirty" products, packages, equipment, mail, or other items into the entrance of the unit (the UV oven accepts packages up to 18" tall by 18" wide - we offer longer and wider units with larger size capacities at an additional cost). The "dirty" packages are cleaned by the UV lamps. The entire disinfection process takes 60 seconds to complete. Sanitized packages exit through an opening after UV treatment. To ease processing, we offer different types of end caps for catching into a collection box and an optional automatic grabber from a hopper (not included) at additional costs. We can also integrate this UV disinfection unit with existing mail/package processing equipment at an additional cost.

Voltage: The IND-CBE-UVC-60-18X18-R3-120V-25C operates on single-phase 120 V AC, 60 Hz.

Click Photos to Enlarge

Larson Electronics LLC
9419 E US HWY 175, Kemp, TX 75143
Phone: 800.369.6671

www.LarsonElectronics.com
Email: sales@LarsonElectronics.com
Fax: 903.498.3364



5-15 Straight Blade Plug
15 Amp / 125V Rated



L5-15 Twist Lock Plug
15 Amp / 125V Rated



Flying Leads / Pigtail Wires

Wiring/Plug: This unit is equipped with 25 feet of 16/3 chemical and abrasion resistant SOOW cord that is fitted with an industrial grade cord cap for easy connection to common wall outlets. Plug options include standard 5-15 15 amp straight blade plug for 110 V wall outlets with ground or NEMA L5-15 15 amp twist lock plug for 125 V twist lock outlets. Alternatively, we can provide flying leads with no plug for hard wire applications or for operators who prefer to wire in user provided cord caps. Please choose pigtail option below for flying leads with no plug.
Mount: This UV sanitation system is a stand alone unit that can be deployed in work sites. Rubber feet at the bottom ensures stability and prevents scratching surfaces during use.
Note on Environment: Sunlight and visible light fixtures do not impact the effectiveness of the disinfecting on this UVC sanitation product. Metal halide, high pressure sodium, fluorescent, and LED light fixtures can be left on. The UV radiation emitted from this product is not disrupted by any type of lighting in the environment. Put simply, NO it DOES NOT need to be dark in the area you plan to disinfect. The UV radiation is harmful to the eyes and skin, and that is why you should not be in the area while it is in operation. Please see user manual for additional safety information.
Suggested Applications: Sanitation, disinfection, warehouses, mail, package processing, products, equipment, and more; kills 99% of viruses, bacteria, mold, and spores.
At Larson Electronics, we do more than meet your lighting needs. We also provide replacement, retrofit, and upgrade parts as well as industrial grade power accessories. Our craftsmen can custom build any lighting system and/or accessories to fit the unique demands of your operation. A commitment to honesty, quality, and dependability has made Larson Electronics a leader in the lighting and electronics business since 1973. Contact us today at 800-369-6671 or message sales@larsonelectronics.com for more information about our custom options tailored to meet your specific industry needs.

REV	DESCRIPTION	DATE
A	PRODUCTION RELEASE	01/12/2023

IND-CBE-UVC-60-18X18 -R3-120V-25C-5.15

LARSON ELECTRONICS®

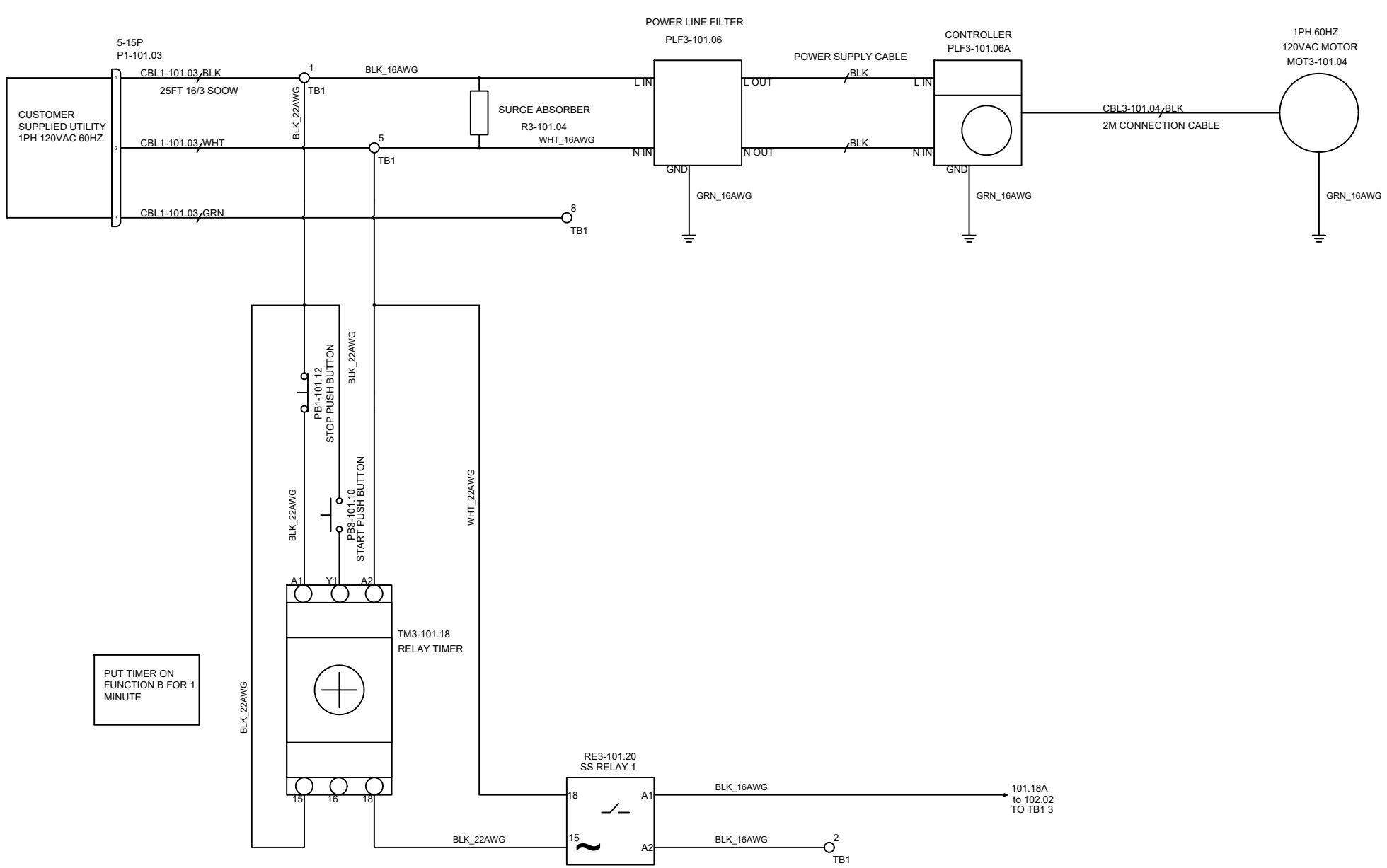

LARSON ELECTRONICS 9419 E US HWY 175, KEMP, TX 75143	TITLE IND-CBE-UVC-60-18X18 -R3-120V-25C-5.15		
	DRAWN BY K.NGUYEN	DATE 01/12/2023	REV A
	CHECKED BY S.DESAI	SHEET # 1 OF 4	DRAWING # 101

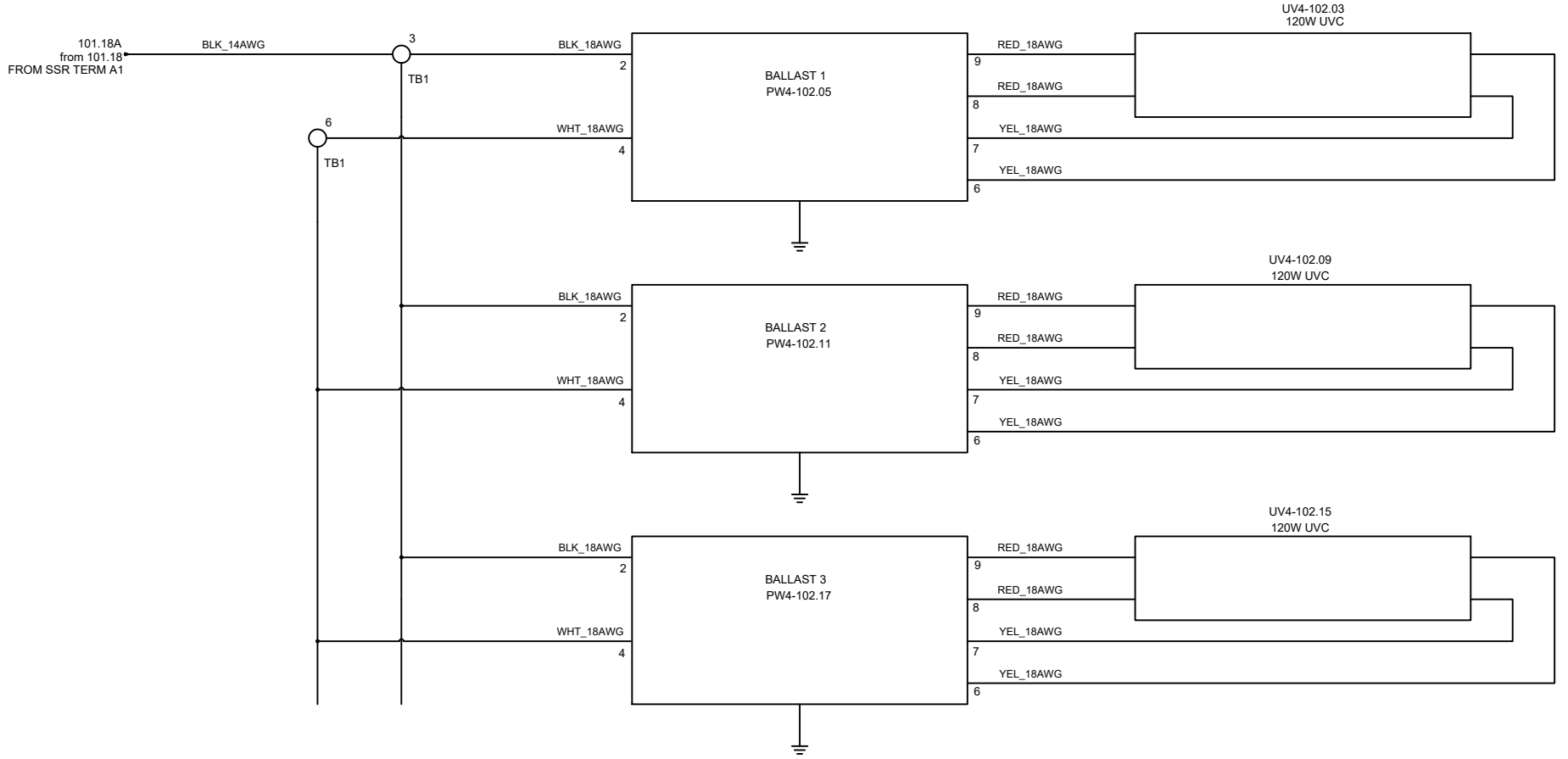

LARSON ELECTRONICS
9419 E US HWY 175,
KEMP, TX 75143

TITLE			
IND-CBE-UVC-60-18X18-R3-120V-25C-5.15			
DRAWN BY	DATE	REV	
K.NGUYEN	01/12/2023	A	
CHECKED BY	SHEET #	DRAWING #	
S.DESAI	2 OF 4	102	

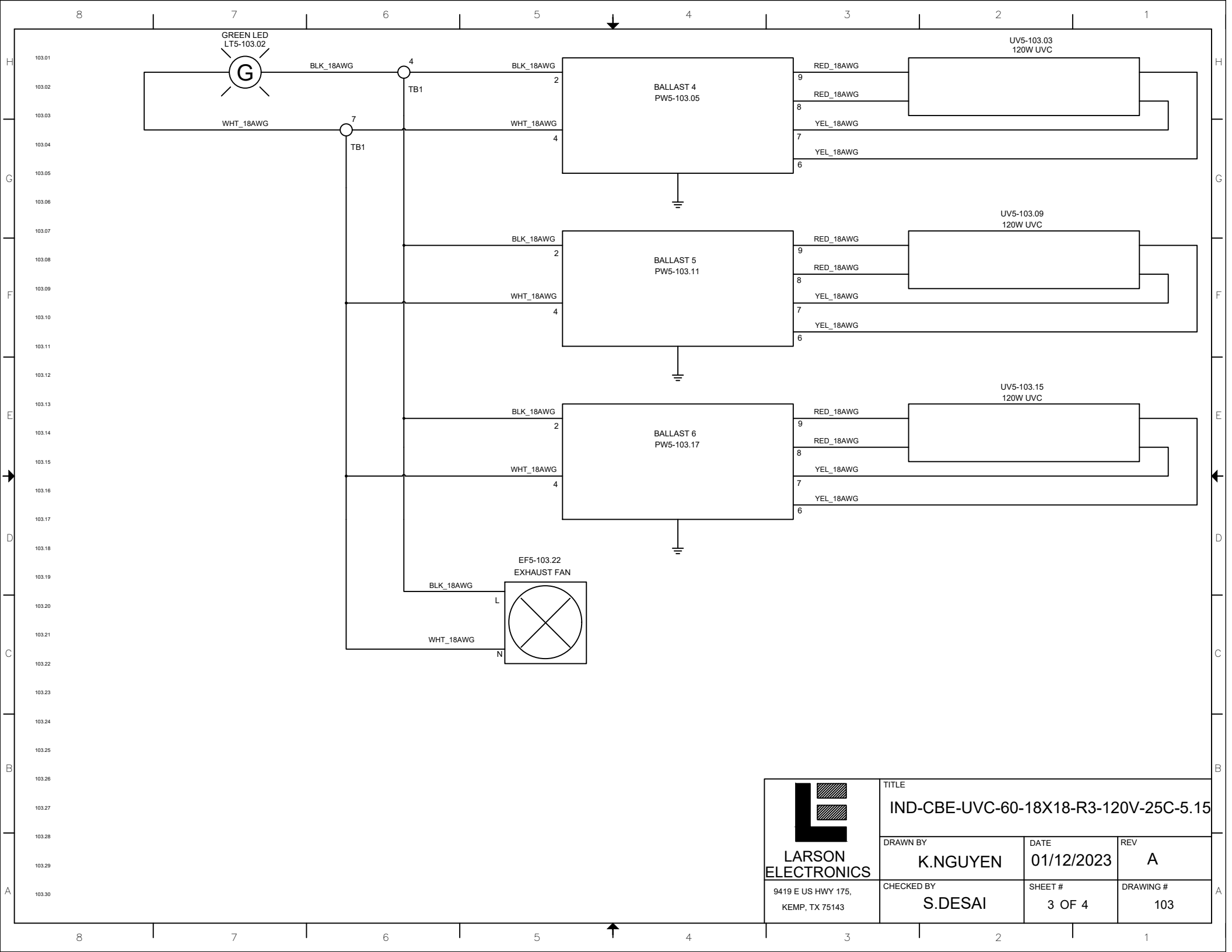

LARSON ELECTRONICS
9419 E US HWY 175,
KEMP, TX 75143

TITLE			
IND-CBE-UVC-60-18X18-R3-120V-25C-5.15			
DRAWN BY	DATE	REV	
K.NGUYEN	01/12/2023	A	
CHECKED BY	SHEET #	DRAWING #	
S.DESAI	3 OF 4	103	

TB1													
Device1	Pin1	Wire1	Type1	T1	Number	T2	Manufacturer	Catalog	Type2	Wire2	Pin2	Device2	Jumper
P1-101.03	1		WIRES		1		PHOENIX CONTACT	UNV00013974	BLK_16AWG		L IN	PLF3-101.06	
PB1-101.12			BLK_20AWG										
RE3-101.20	A2		BLK_16AWG		2		PHOENIX CONTACT	UNV00013974					
RE3-101.20	A1		BLK_14AWG		3		PHOENIX CONTACT	UNV00013974	BLK_18AWG		2	PW4-102.05	
PW4-102.11	2		BLK_18AWG										
LT5-103.02			BLK_18AWG		4		PHOENIX CONTACT	UNV00013974	BLK_18AWG		2	PW5-103.05	
PW5-103.11	2		BLK_18AWG										
PLF3-101.06	N IN		WHT_16AWG		5		PHOENIX CONTACT	UNV00013975	WHT_16AWG			R3-101.04	
P1-101.03	2		WIRES						WHT_20AWG		A2	TM3-101.18	
PW4-102.05	4		WHT_18AWG		6		PHOENIX CONTACT	UNV00013975	WHT_18AWG		4	PW4-102.11	
LT5-103.02			WHT_18AWG		7		PHOENIX CONTACT	UNV00013975	WHT_18AWG		4	PW5-103.05	
PW5-103.11	4		WHT_18AWG										
P1-101.03	3		GRN_16AWG		8		PHOENIX CONTACT	UNV00013989					

TAGS	QTY	CATALOG	DESCRIPTION
RE3-101.20	1	UNV00015812	SOLID STATE RELAY 120VAC @ COILS 600VAC LOAD 10A
UV4-102.03 UV4-102.09 UV4-102.15 UV5-103.03 UV5-103.09 UV5-103.15	6	UNV00015297	4FT 120W UVC BULB
P1-101.03	1	UNV00006731	Plug, Straight Blade, 15A, 125V NEMA 5-15
TM3-101.18	1	UNV00012442	TIME DELAY RELAY 12-240VDCAC 16A
EF5-103.22	1	UNV00015288	120V EXHAUST FAN
PLF3-101.06A	1	US2D90-UA-CC	MOTOR SPEED CONTROLLER 120V
PLF3-101.06	1	FN2070-10-06	POWER LINE FILTER SINGLE PHASE 250V 10A
LT5-103.02	1	UNV00015355	GREEN PILOT LIGHT 120VAC
MOT3-101.04	1	SCM590UA-15	90W 120VAC 1PH MOTOR
PB3-101.10	1	UNV00013980	Pushbutton, 22mm, momentary, (1) N.O. contact(s), metal base, metal bezel, Operator: green, flush, 30mm, round, plastic
PB1-101.12	1	UNV00013981	Pushbutton, 22mm, momentary, (1) N.C. contact(s), metal base, metal bezel, Operator: red, flush, 30mm, round, plastic
PW4-102.05 PW4-102.11 PW4-102.17 PW5-103.05 PW5-103.11 PW5-103.17	6	UNV00015311	120W BALLAST 120V
R3-101.04	1	LSP05120P	SURGE ABSORBER 150VAC 5KA
TB1	4	UNV00013974	4 HOLE GREY TB
TB1	3	UNV00013975	4 HOLE BLUE TB
TB1	3	UNV00013976	RED JUMPER FOR 2 HOLE TERM BLOCK
TB1	1	UNV00013989	2 HOLE GREEN TB
CBL3-101.04	1	CC02SCR	2M FLEXIBLE CONNECTION CABLE FOR MOTOR
CBL1-101.03	1	UNV00007524	CORD 16/3 SOOW UL 90C BLK CABLE

LARSON ELECTRONICS
9419 E US HWY 175,
KEMP, TX 75143

TITLE: IND-CBE-UVC-60-18X18-R3-120V-25C-5.15

DRAWN BY	DATE	REV
K.NGUYEN	01/12/2023	A
CHECKED BY	SHEET #	DRAWING #
S.DESAI	4 OF 4	104

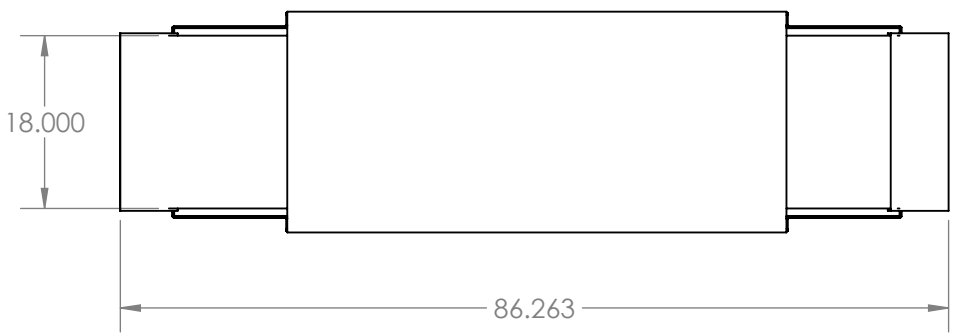

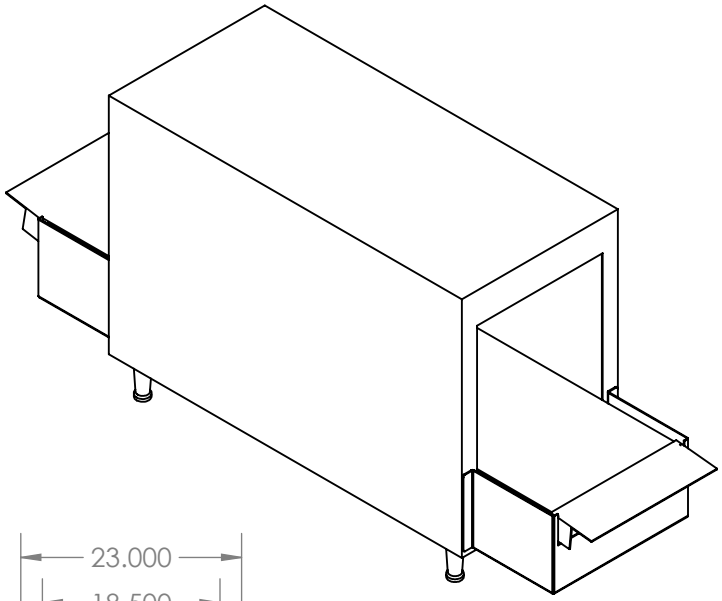

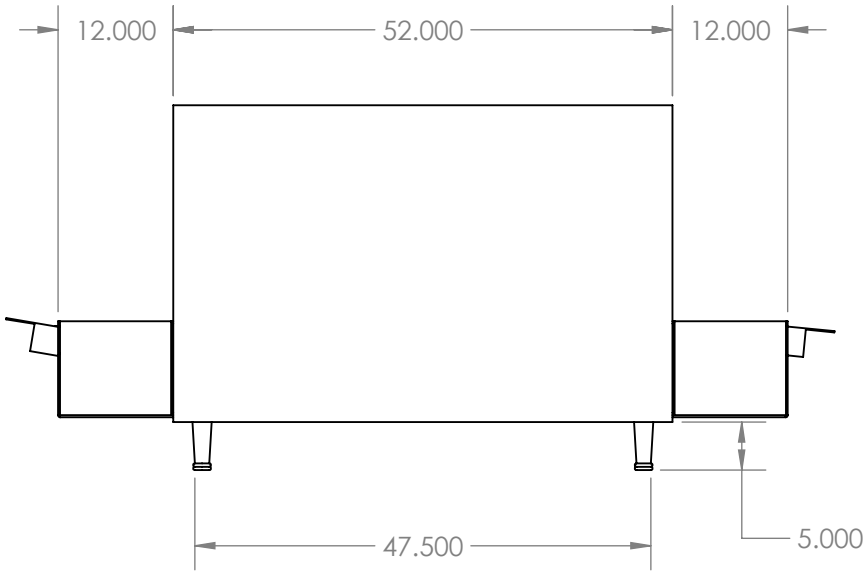

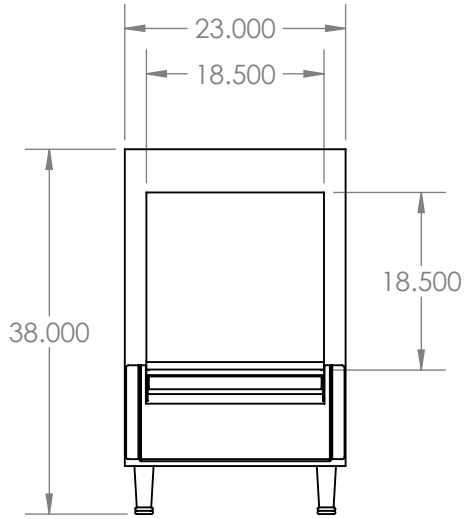

LARSON ELECTRONICS

TITLE:

IND-CBE-UVC-60-18X18-R3

FINISH			
SURFACE AREA [sq. in]		NAME	
DIMENSIONS ARE IN INCHES	DRAWN	CHRISTOPHER THAUER	
MATERIAL	CHECKED	N/A	
DO NOT SCALE DRAWING	DATE	1/21/2021	

SIZE **A** | DWG. NO. | REV

SCALE: NTS | SHEET 1 OF 1

PROPRIETARY AND CONFIDENTIAL
THE INFORMATION CONTAINED IN THIS DRAWING IS THE SOLE PROPERTY OF LARSON ELECTRONICS LLC. ANY REPRODUCTION IN PART OR AS A WHOLE WITHOUT THE WRITTEN PERMISSION OF LARSON ELECTRONICS LLC IS PROHIBITED.

UNLESS OTHERWISE NOTED:

Angle	+/- .5 deg
.X	+/- .02
.XX	+/- .01
.XXX	+/- .005


WARNING WARNING WARNING
LARSON ELECTRONICS




DANGER
ELECTRIC SHOCK HAZARD



Frequently Asked Questions (FAQ)