Larson Electronics LLC
9419 E US HWY 175, Kemp, TX 75143
Phone: 800.369.6671

www.LarsonElectronics.com
Email: sales@LarsonElectronics.com
Fax: 903.498.3364

LEDWP-1000-10C-GP

100 Watt High Output LED Wall Pack Light - 400W Metal Halide Equivalent - 10,000 Lumens - 120-277V - 10' 16/3 SOOW Cord w/ General Area Cord Cap

Product ID: 269288

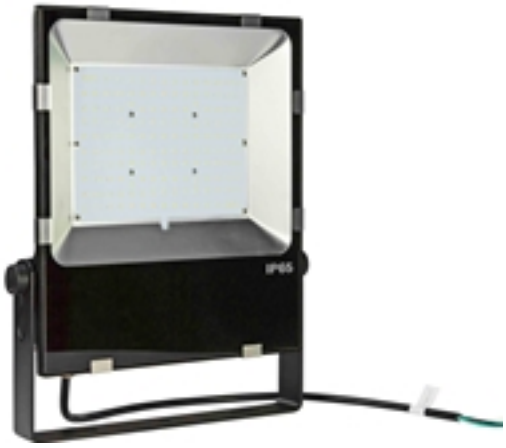

Larson Electronics LLC manufactures a wide variety of products, including custom built to spec designs. The pictures displayed for this unit are a general representation of form factor for the product line and may not accurately represent this exact configuration in every detail due to custom builds and changes between similar products in our standard catalog. The specifics for this configuration are listed in the specification table and supporting documentation (CAD files, Dimensional Drawing, Name Plate Diagram, Wiring Diagram, etc.). This means that specific details (receptacles, plugs, wires, connections, mounting brackets, external finishes, etc.) may not be accurately represented in images vs specifications. Please review specifications and do not order based solely on images.

LEDWP-1000-10C-GP Wall Pack Light

Lamp Type: LED
Dimensions: 7.00"H x 14.25"W x 3.63"D
Watts: 100
Lumens: 10,000
Voltage: 110-277 Volts AC 50/60hz
Lighting Configuration: Flood
Mounting: Adjustable Bracket
Wiring: 12" Pigtail
Amps: 0.83
LED Light Color: Cool White - 6000K
LED Life Expectancy: 60,000 hours
Materials: Aluminum Housing, Polycarbonate Lens
Housing Color: Black or White
Color Rendering Index: >75
Weight: 15.3 lb
Wiring: 10' 16/3 SOOW w/ General Area Cord Cap
Cord Cap Options: 5-15, 6-15, 5-20, 6-20, L5-15, L6-15, L5-20, L6-20, BS1363, Schuko, or Pigtail

LEDWP-1000-10C-GP Features

Waterproof/Vapor Proof
Operates on Standard 110-277 V AC
Impact/Vibration Resistant Construction
60,000 Hour LED Life
ETL Approved for Wet Locations
IP65 Waterproof

Special Orders - Requirements

Contact us for special requirements

Toll Free: 1-800-369-6671
Intl: 1-903-270-1187
E-mail: sales@larsonelectronics.com

The LEDWP-1000-10C-GP from Larson Electronics is a LED Wall Pack Light that offers high light output from a compact form factor and is designed to provide a more durable and long lived alternative to halogen and metal halide units. This 90 watt LED light produces illumination comparable to a

400 watt metal halide unit without the high heat, fragile construction, or high energy costs of incandescent lighting. The LEDWP-1000-10C-GP is equipped with 10` of 16/3 SOOW cord terminated in a general area cord cap.

The LEDWP-1000-10C-GP LED wall pack light from Larson Electronics produces a long flood beam of light while drawing only 0.83 amps at 100 watts on a 120 volt AC electrical system. The light assembly consists of eight high output MCOB LEDs paired with specular reflectors to produce a light output comparable to that of a 400 watt metal halide. This LED wall pack is IP67 rated and designed to withstand demanding conditions and is waterproof, vapor proof, and built to resist the damaging effects of an outdoor environment.

The LEDWP-1000-10C-GP consists of eight 12.5 watt LEDs housed within a waterproof aluminum housing that is powder coated for added durability and resistance to corrosion. The housing incorporates integral cooling fins for efficient heat dissipation and increased LED longevity. The LED lamp assembly is protected by a shatterproof polycarbonate lens which is secured to the housing with a waterproof seal. A 1/2" waterproof connector provides a secure and sealed power connection point and rounds out this unit`s weather resistant construction.

LED Benefits: Unlike gas burning and arc type lamps that have glass bulbs, LEDs have no filaments or fragile housings to break during operation and/or transportation. Instead of heating a small filament or using a combination of gases to produce light, light emitting diodes (LEDs) use semi-conductive materials that illuminate when electric current is applied, providing instant illumination with no warm up or cool down time before re-striking. Because there is no warm up period, this light can be cycled on and off with no reduction in lamp life.

LED lights run at significantly cooler temperatures than traditional metal halide and high pressure sodium lights and contain no harmful gases, vapors, or mercury, making them both safer and more energy efficient. No extra energy is wasted in cooling enclosed work areas due to external heat emissions from bulb type lights, and the operator risks associated with traditional lighting methods, such as accidental burns and exposure to hazardous substances contained in the glass bulbs, are eliminated. In addition, LEDs are also safer for the environment as they are 100% recyclable, which eliminates the need for costly special disposal services required with traditional gas burning and arc type lamps.

Mounting hardware for the LEDWP-1000-10C-GP consists of a stainless steel coated bracket and stainless steel screws to provide secure mounting and resistance to rust and corrosion. The mounting assembly provides for 360/180 degrees of rotation and tilt to allow the user to position the unit as desired once mounted. This unit is designed to operate with voltages ranging from 110 VAC to 277 VAC 50/60 Hz, providing versatile power connection options and the ability to run the unit with commonly encountered 120-220 V AC voltages. The LEDWP-1000-10C-GP provides an efficient and highly durable alternative to standard metal halide and halogen wall pack lights that produces a longer reaching beam while using only a fraction the power.

With the LEDWP-1000-10C-GP there is no warm up period, the light can be cycled on and off without any reduction in lamp life, there is no glass or filament to shatter or break, and the solid state LED design provides 50,000 hours of operation. just to name a few examples.

Click Photos to Enlarge

Larson Electronics LLC
9419 E US HWY 175, Kemp, TX 75143
Phone: 800.369.6671

www.LarsonElectronics.com
Email: sales@LarsonElectronics.com
Fax: 903.498.3364



5-15 Straight Blade Plug
15 Amp / 125 V Rated



L5-15 Twist Lock Plug
15 Amp / 125 V Rated



L6-15 Twist Lock Plug
15 Amp / 250 V Rated



UK BS1363 Straight Blade Plug
13 Amp / 250 V Rated / Internal Fuse



Intl Schuko 2-Pin Plug
16 Amp / 250 V Rated / Grounded



Flying Leads / Pigtail Wires

Wiring/Plug: This LED wall pack light fixture is equipped with 10 feet of 16/3 chemical and abrasion resistant SOOW cord that is fitted with an industrial grade cord cap for easy connection to common wall outlets. Plug options include standard 5-15 15 amp straight blade plug for 110 V wall outlets with ground, standard 5-20 20 amp straight blade plug for 110 V wall outlets with ground, standard 6-15 15 amp straight blade plug for 220-240 V wall outlets with ground, standard 6-20 20 amp straight blade plug for 220-240 V wall outlets with ground, NEMA L5-15 15 amp twist lock plug for 125V twist lock outlets, NEMA L5-20 20 amp twist lock plug for 125 V twist lock outlets, NEMA L6-15 15 amp twist lock plug for 240V twist lock outlets, NEMA L6-20 20 amp twist lock plug for 240 V twist lock outlets, British BS1363 13 amp fused 3-blade plug for United Kingdom outlets, or a two pin 16 amp rated Schuko plug with ground contact and socket for European outlets up to 250 V. Alternatively, we can provide flying leads with no plug for hard wire applications or for operators who prefer to wire in user provided cord caps. Please choose pigtail option below for flying leads with no plug.
Suggested Applications: The LEDWP-1000-10C-GP is ideal for wall pack lighting, wall pack down lighting, upwards lighting, monuments, marinas, docks, warehouses, billboards, parking lots, and security systems.
At Larson Electronics, we do more than meet your lighting needs. We also provide replacement, retrofit, and upgrade parts as well as industrial grade power accessories. Our craftsmen can custom build any lighting system and/or accessories to fit the unique demands of your operation. A commitment to honesty, quality, and dependability has made Larson Electronics a leader in the lighting and electronics business since 1973. Contact us today at 800-369-6671 or message sales@larsonelectronics.com for more information about our custom options tailored to meet your specific industry needs.

REV	DESCRIPTION	DATE
A	PRODUCTION RELEASE	11-10-2021

LEDWP-1000-10C-GP-PIGTAIL-BLK

LARSON ELECTRONICS®

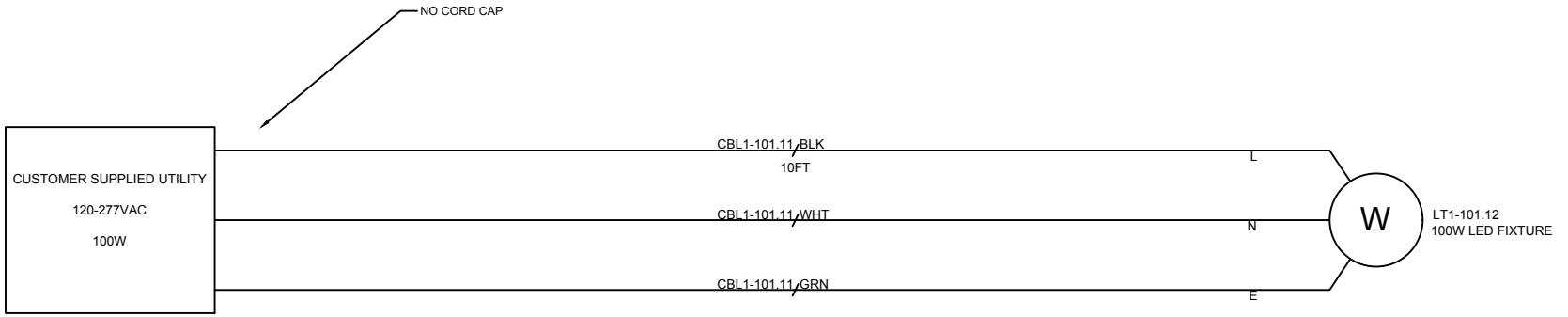

TAGS	QTY	CATALOG	DESCRIPTION
LT1-101.12	1	UNV00013954	100W LED FLOOD LIGHT - 120/277VAC
CBL1-101.11	1	UNV00007524	CORD 16/3 SOOW UL 90C BLK

LARSON ELECTRONICS
9419 E US HWY 175,
KEMP, TX 75143

TITLE: LEDWP-1000-10C-GP-PIGTAIL-BLK

DRAWN BY	DATE	REV
P.CRYER	11-10-2021	A
CHECKED BY	SHEET #	DRAWING #
R.BLACK	1 OF 1	101

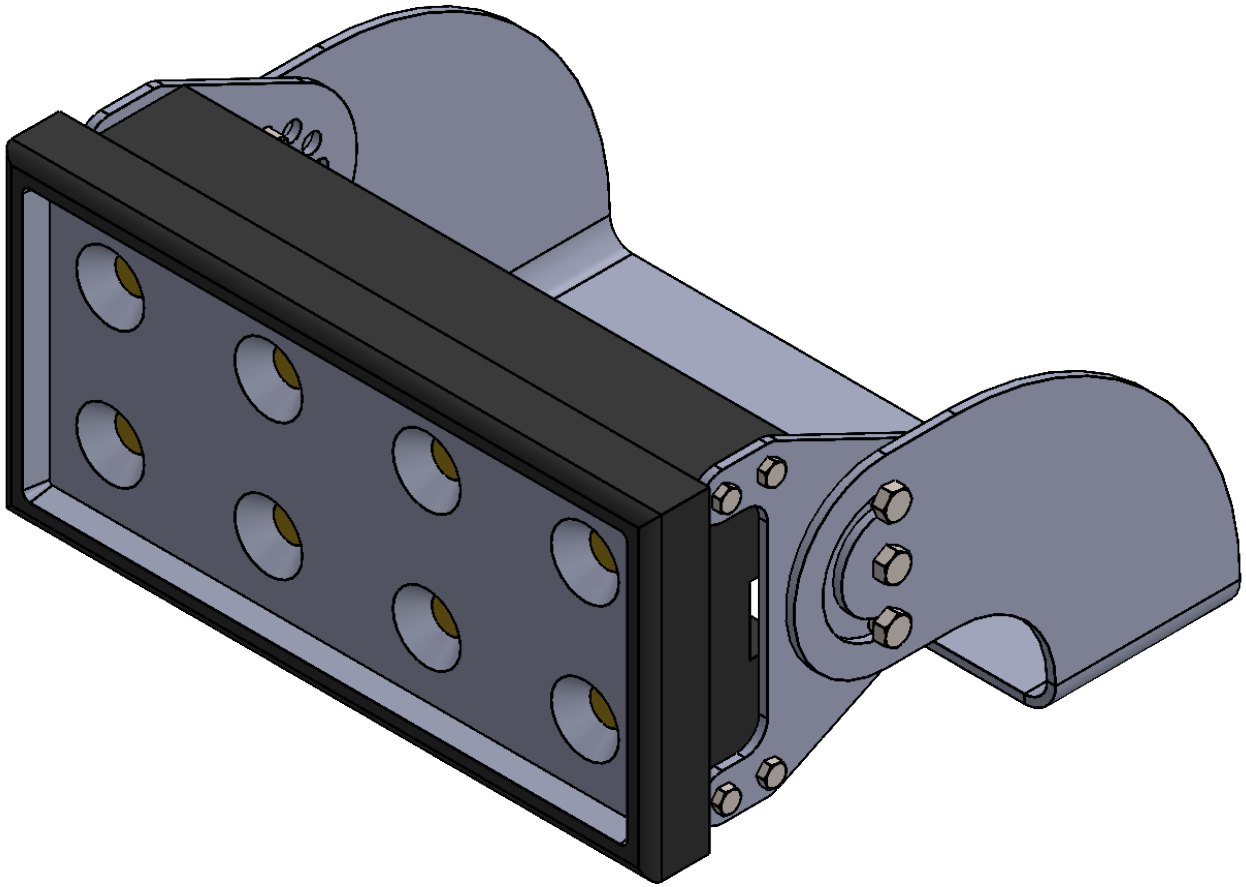

LARSON ELECTRONICS

PART NUMBER:

LEDWP-1000

SIZE		REV
A		1

DIMENSIONS ARE IN INCHES			SCALE: NTS	SHEET 1 OF 3
DO NOT SCALE DRAWING	DATE	8/31/2020		

PROPRIETARY AND CONFIDENTIAL

THE INFORMATION CONTAINED IN THIS DRAWING IS THE SOLE PROPERTY OF LARSON ELECTRONICS LLC. ANY REPRODUCTION IN PART OR AS A WHOLE WITHOUT THE WRITTEN PERMISSION OF LARSON ELECTRONICS LLC IS PROHIBITED.

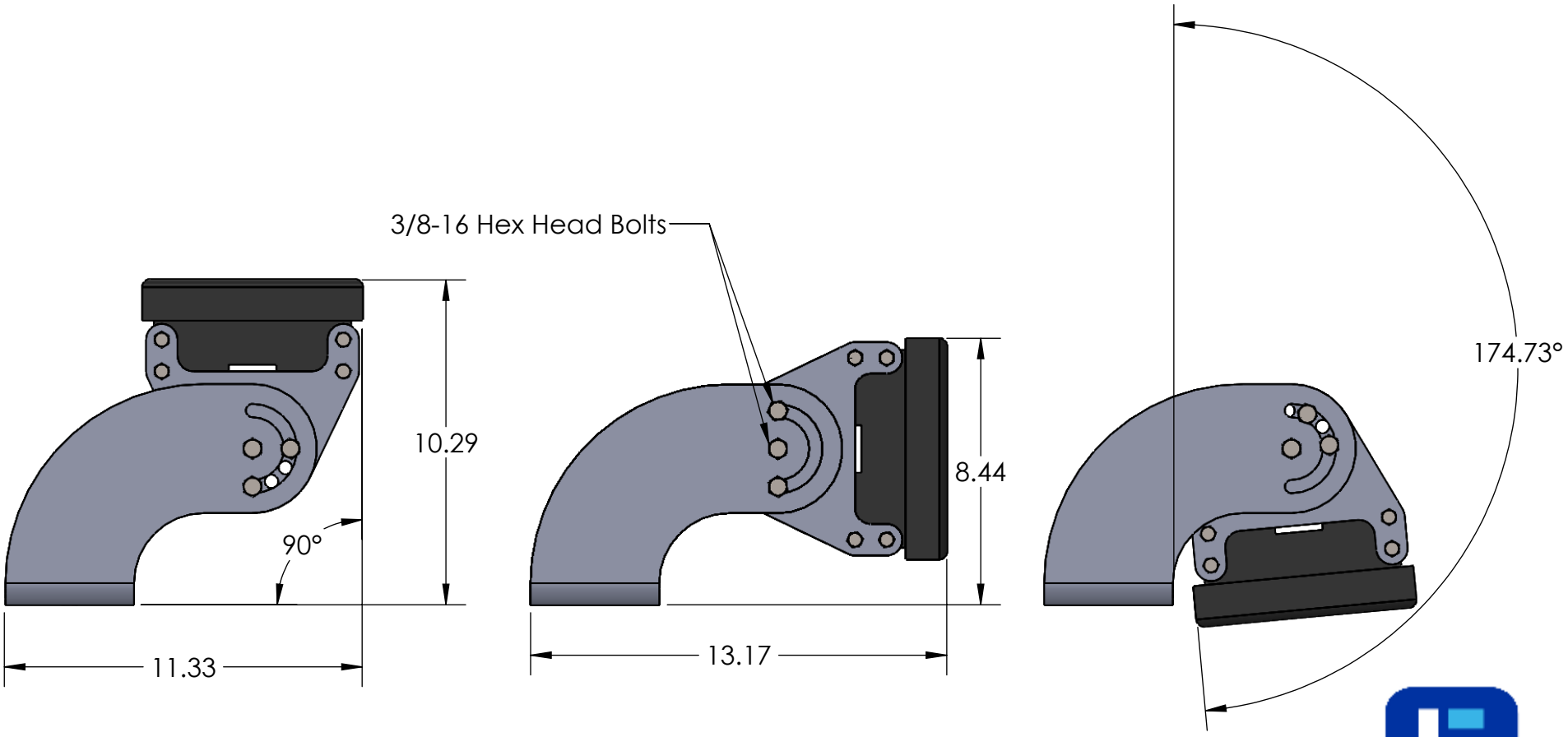

LARSON ELECTRONICS

PART NUMBER:

LEDWP-1000

SIZE		REV
A		1

DIMENSIONS ARE IN INCHES				
DO NOT SCALE DRAWING	DATE	8/31/2020	SCALE: NTS	SHEET 2 OF 3

PROPRIETARY AND CONFIDENTIAL

THE INFORMATION CONTAINED IN THIS DRAWING IS THE SOLE PROPERTY OF LARSON ELECTRONICS LLC. ANY REPRODUCTION IN PART OR AS A WHOLE WITHOUT THE WRITTEN PERMISSION OF LARSON ELECTRONICS LLC IS PROHIBITED.

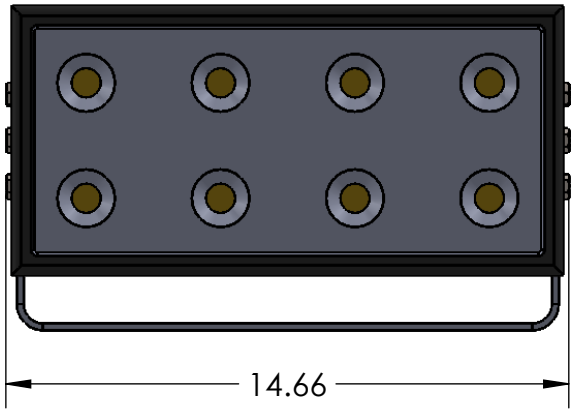

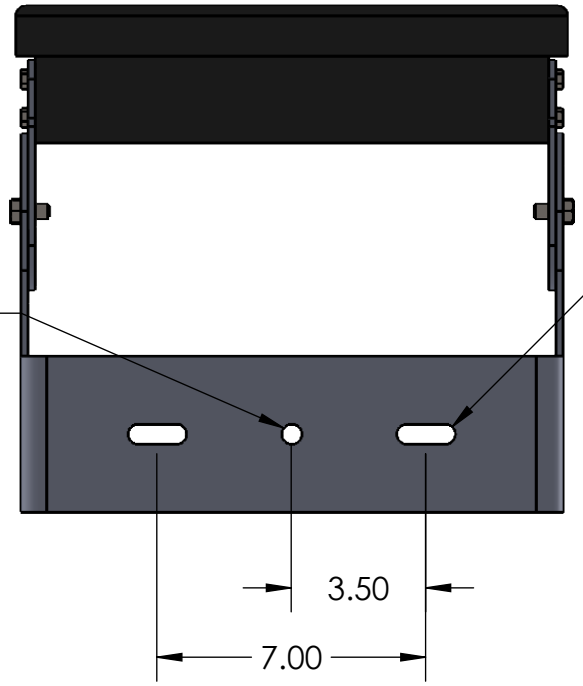

LARSON ELECTRONICS

PART NUMBER:

LEDWP-1000

SIZE		REV
A		1

DIMENSIONS ARE IN INCHES				
DO NOT SCALE DRAWING	DATE	8/31/2020	SCALE: NTS	SHEET 3 OF 3

PROPRIETARY AND CONFIDENTIAL

THE INFORMATION CONTAINED IN THIS DRAWING IS THE SOLE PROPERTY OF LARSON ELECTRONICS LLC. ANY REPRODUCTION IN PART OR AS A WHOLE WITHOUT THE WRITTEN PERMISSION OF LARSON ELECTRONICS LLC IS PROHIBITED.

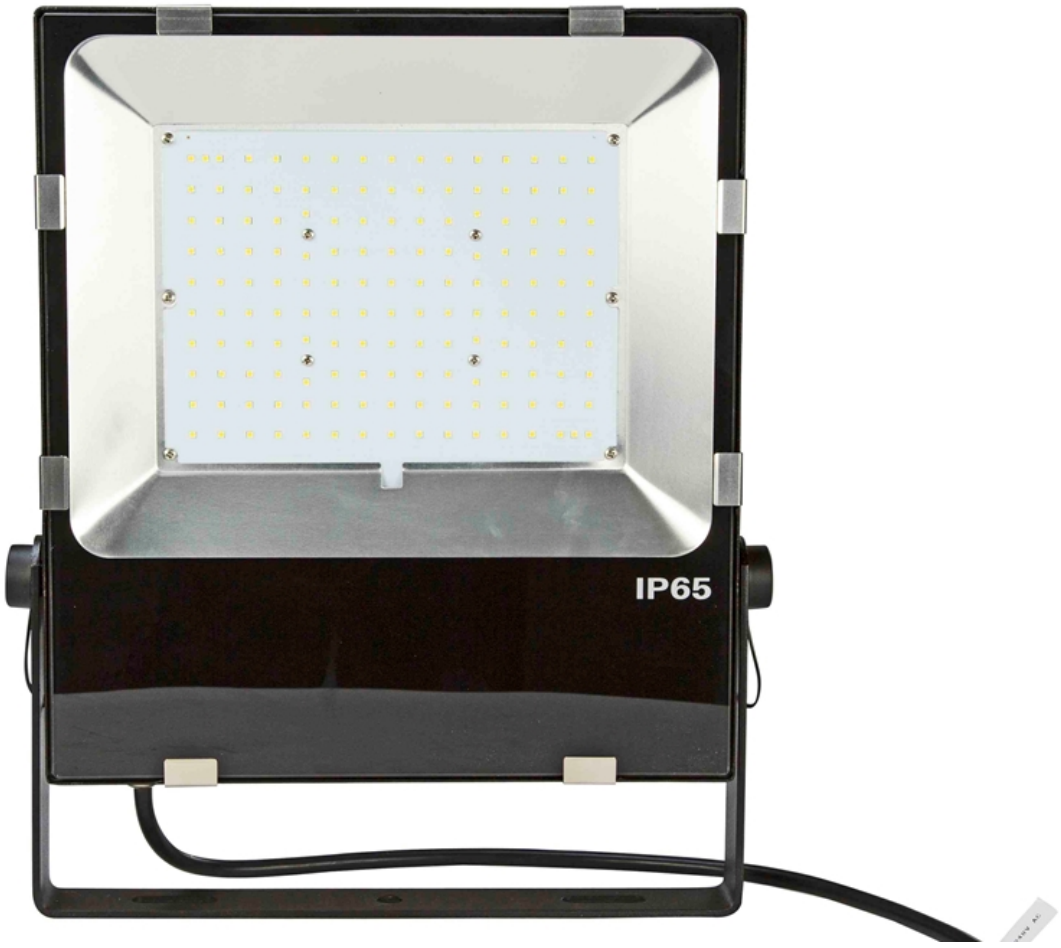
IP65


IP65




IP65

Frequently Asked Questions (FAQ)