Larson Electronics LLC
9419 E US HWY 175, Kemp, TX 75143
Phone: 800.369.6671

www.LarsonElectronics.com
Email: sales@LarsonElectronics.com
Fax: 903.498.3364

## IND-UC.360-xx-V3-SP0109

# Replacement 4-lamp Ballast for IND-UC.360 UV Sanitation Carts

**Product ID: 268038**




**Larson Electronics LLC manufactures a wide variety of products, including custom built to spec designs. The pictures displayed for this unit are a general representation of form factor for the product line and may not accurately represent this exact configuration in every detail due to custom builds and changes between similar products in our standard catalog. The specifics for this configuration are listed in the specification table and supporting documentation (CAD files, Dimensional Drawing, Name Plate Diagram, Wiring Diagram, etc.). This means that specific details (receptacles, plugs, wires, connections, mounting brackets, external finishes, etc.) may not be accurately represented in images vs specifications. Please review specifications and do not order based solely on images.**

**IND-UC.360-xx-V3-SP0109 Replacement 4-lamp Ballast for IND-UC.360 UV Sanitation Carts**
**Type: T8**
**Dimensions: 1.18" H x 9.47" L x 1.68" W**
**Nominal Total Max Wattage: 107W**
**Voltage: 120-277V**
**Ballast Factor: 0.88**
**Minimum Starting Temp: - 60°F (16°C)**
**THD: <10%**

**Features**

Small Can Enclosure
Lamp Striation Control (LSC)
Professional Series
30-40% Energy Savings Compared to F40T12
EPA Reg. No 98409-1
EPA Est. No. 98409-TX-1

**Special Orders- Requirements**
Contact us for special requirements
**Toll Free: 1-800-369-6671**
**Fax: 1-903-498-3364**
**E-mail:** sales@larsonelectronics.com

Electric Instant Start Fluorescent Ballast for IND-UV.360 UV Sanitation Carts. One ballast powers up to (4) lamps. Multiple ballasts needed per cart. Please verify lamp wattage and lamp qty before ordering.

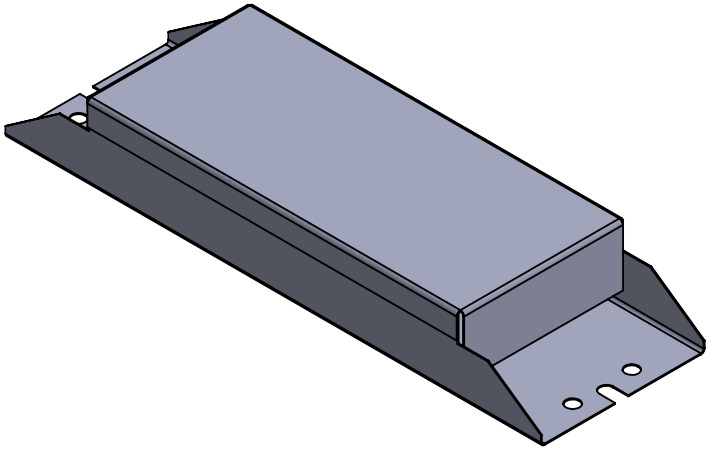

LARSON ELECTRONICS

PART NUMBER:

**IND-UC.360-XX-V3-SP0109**

| SIZE | | REV |
|---|---|---|
| **A** | | **1** |

SCALE: NTS | SHEET 1 OF 2

DATE 11/17/2022

DIMENSIONS ARE IN INCHES

DO NOT SCALE DRAWING

UNLESS OTHERWISE NOTED:

| | |
|---|---|
| Angle | +/- .5 deg |
| .X | +/- .02 |
| .XX | +/- .01 |
| .XXX | +/- .005 |

**PROPRIETARY AND CONFIDENTIAL**

THE INFORMATION CONTAINED IN THIS DRAWING IS THE SOLE PROPERTY OF LARSON ELECTRONICS LLC. ANY REPRODUCTION IN PART OR AS A WHOLE WITHOUT THE WRITTEN PERMISSION OF LARSON ELECTRONICS LLC IS PROHIBITED.

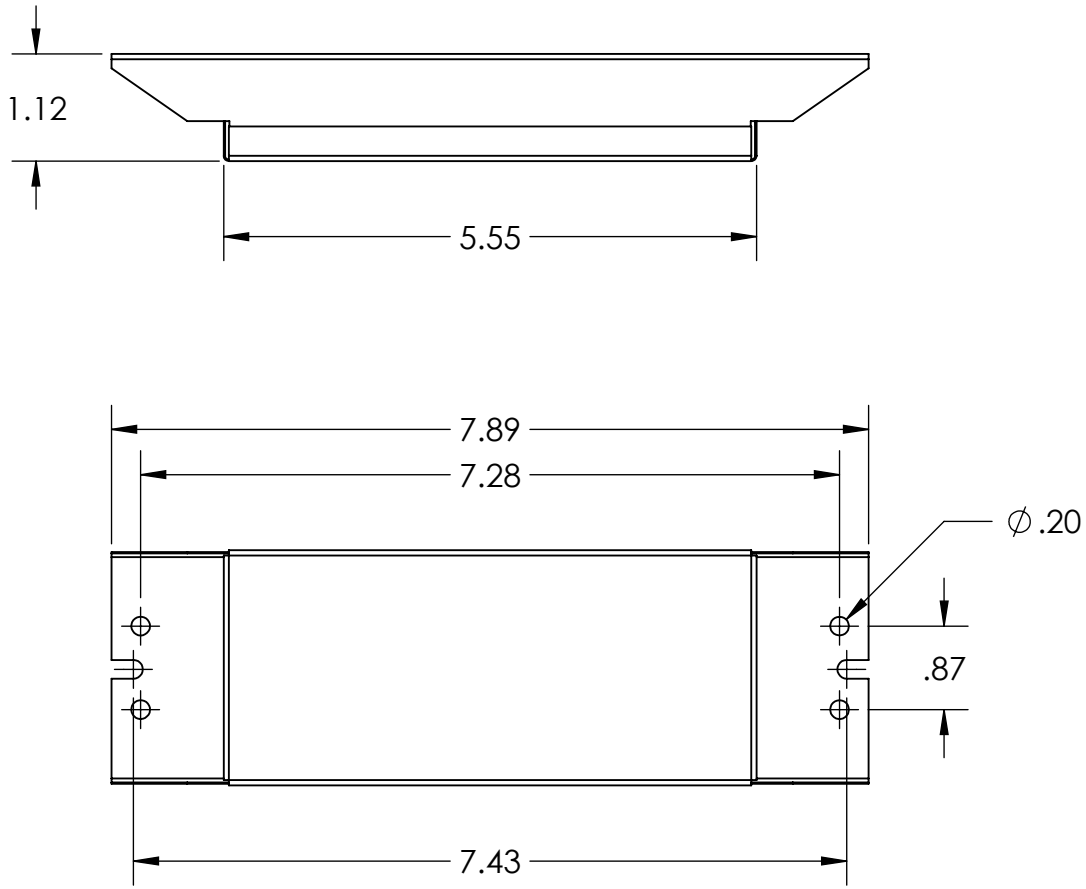


LARSON ELECTRONICS

PART NUMBER:

**IND-UC.360-XX-V3-SP0109**

**PROPRIETARY AND CONFIDENTIAL**
THE INFORMATION CONTAINED IN THIS DRAWING IS THE SOLE PROPERTY OF LARSON ELECTRONICS LLC. ANY REPRODUCTION IN PART OR AS A WHOLE WITHOUT THE WRITTEN PERMISSION OF LARSON ELECTRONICS LLC IS PROHIBITED.

UNLESS OTHERWISE NOTED:

| | |
|---|---|
| Angle | +/- .5 deg |
| .X | +/- .02 |
| .XX | +/- .01 |
| .XXX | +/- .005 |

DIMENSIONS ARE IN INCHES

DO NOT SCALE DRAWING

DATE 11/17/2022

SIZE **A**

REV **1**

SCALE: NTS

SHEET 2 OF 2


120V to 277V
4435 290 34332
MISTER
Approved
LARSON
ELECTRONICS
A21
IND-UC.360-XX-V3-SP0109
LARSONELECTRONICS.COM
BALLAST
WARNING:
Install in accordance with
National and Local Electrical Codes


LARSON
ELECTRONICS

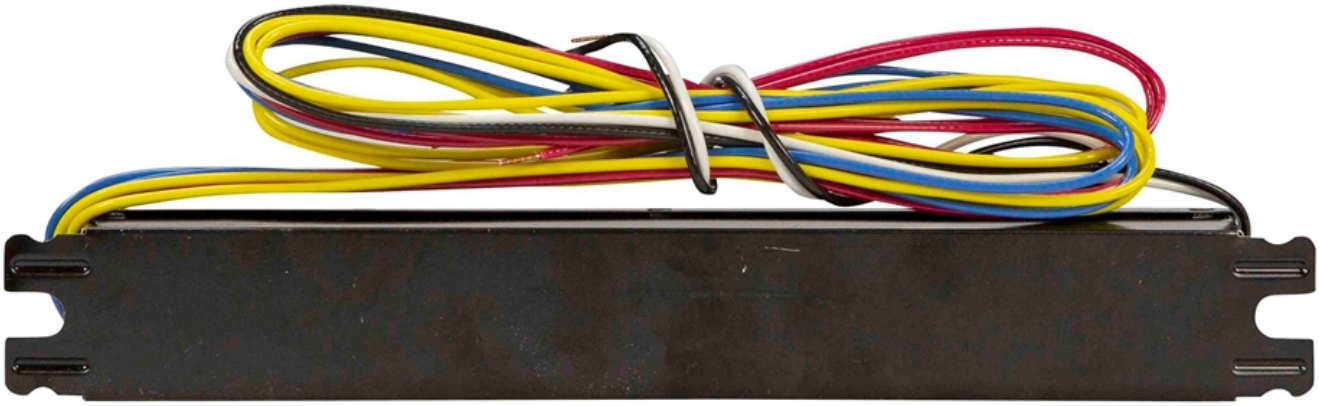

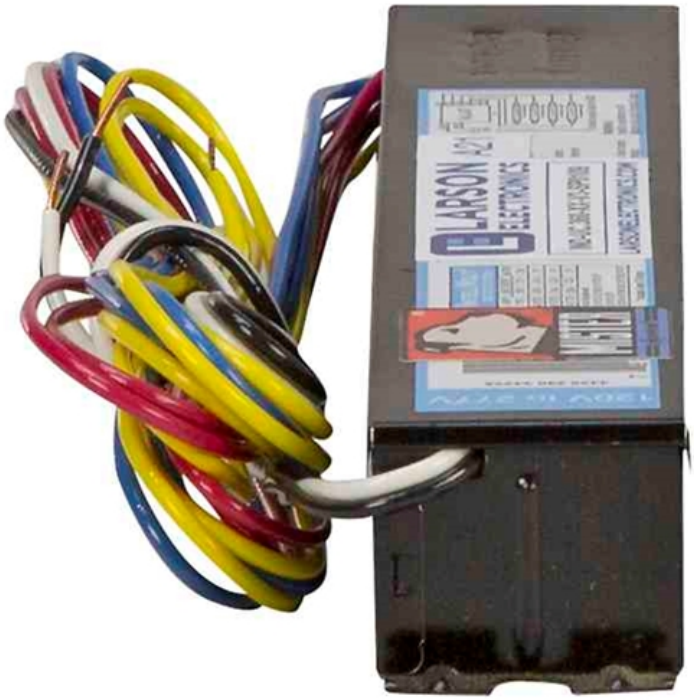
LARSON
ELECTRONICS

# Form 3540-8 Accepted for Establishment LARSON ELECTRONICS LLC

From
helpdesk@epacdx.net

---

Re: Establishment Number: 98409-TX-1
EPA Region: 06

Larson Electronics LLC
Attn: Robert Bresnahan
9419 E US HWY 175

Kemp, TX 75143 USA

This email serves as notification of registration of the pesticide-producing establishment for which you applied, pursuant to Section 7 of the Federal Insecticide, Fungicide, and Rodenticide Act (FIFRA). The Form 3540-8 for establishment LARSON ELECTRONICS LLC has been accepted. The new Establishment Number is: 98409-TX-1. This establishment registration will remain in effect, provided pesticide reports on production and sales or distribution amounts are submitted annually as required.

Part 167 of the Code of Federal Regulations (40 CFR) requires your company to submit an initial report for Pesticide-Producing Establishments, EPA Form 3540-16, within 30 days of receipt of this email. You should submit electronically with the Section Seven Tracking System (SSTS) to ensure on-time delivery. You can find out how to register for e-reporting and submit your initial and annual reports quickly here: https://www.epa.gov/compliance/electronic-reporting-pesticide-establishments

Please note that the initial report asks for production amounts for year **2019**. **Failure to submit your Initial report(s) within 30 days may subject your establishment(s) to an administrative civil penalty.**

After the initial report, future reports must be submitted on a yearly basis. Production reports for establishments registered to produce pesticides and pesticidal devices are due by March 1st as long as the establishment is active, regardless of whether or not production has occured (regulations pursuant to Section 7 of FIFRA).

*NOTE: EPA will not accept any faxes or emails of establishment initial or annual reports (EPA Form 3540-16).*

Parts of the 40 CFR which apply to pesticide establishments are: (1) *Part 167-Registration of Pesticide and Active Ingredient Producing Establishments, Submission of Pesticide Reports* and (2) *Part 169-Books and Records of Pesticide Production and Distribution*.

Changes in name, address, or ownership of the company or any establishments are to be reported to this

office within thirty (30) days of the change. If your company decides to cease production of all pesticides and pesticidal-devices, you may request termination of the establishment(s). Requests for termination of establishments can be sent to the proper EPA Regional Coordinator in your area, or completed on our electronic reporting system at https://cdx.epa.gov.

The container of each pesticide product which is released for shipment must bear the EPA Establishment Number assigned to the establishment in which it was produced. This number, which is to be preceded by "EPA Est.", may appear in any suitable location on the label or immediate container. It must also appear on the outside container or wrapper of the package if the EPA Establishment Number on the immediate container cannot be clearly read.

For more information, FAQs and additional instructions please go to our website: https://www.epa.gov/compliance/pesticide-establishment-registration-and-reporting

**UNITED STATES ENVIRONMENTAL PROTECTION AGENCY**
**WASHINGTON, D.C. 20460**

Sep 23, 2020

OFFICE OF CHEMICAL SAFETY
AND POLLUTION PREVENTION

Robert Bresnahan
Larson Electronics LLC
9419 E US HWY 175

Kemp, TX 75143

Subject: Assignment of New EPA Company Number

Dear Registrant:

The Office of Pesticide Programs received your request for a company/distributor number. The company number assigned to you is 98409.

You are required to notify the Agency of any change in name or address. All requests for change of company name and/or address, appointment of agent or withdrawal of an agent's appointment, must be sent to the following address:

Document Processing Desk(COADR)
Office of Pesticide Programs(7504P)
U.S. Environmental Protection Agency
1200 Pennsylvania Avenue, N.W.
Washington, DC 20460

All products must be registered with the Agency prior to shipment and/or sale. Information on registering pesticide products can be obtained by calling the Registration Division Ombudsperson at (703) 308-8893. Requests for a Pesticide Registration Kit can be obtained via e-mail to: Hobgood.Sherada@epa.gov If you are only distributing a product you must complete the Notice of Supplemental Registration of Distributor (EPA form 8570-5). This form can also be obtained by calling the number listed above or can be downloaded at: https://www.epa.gov/pesticide-registration/pesticide-registration-manual-blank-forms.

Any production of pesticides, active ingredients or devices, including companies or establishments that import into the United States, must be conducted in a registered pesticide-producing or device-producing establishment. Information on registering an establishment can be downloaded at: https://www.epa.gov/compliance/epa-form-3540-8-application-registration-pesticide-producing-and-device-producing.

Sincerely,

Shirley A. Burgess

Front End Processing Staff
Information Services Branch
Information Technology & Resources Management Division

# Frequently Asked Questions (FAQ)