Larson Electronics LLC
9419 E US HWY 175, Kemp, TX 75143
Phone: 800.369.6671

www.LarsonElectronics.com
Email: sales@LarsonElectronics.com
Fax: 903.765.7664

IND-HL-UVC-FL1524-50

Industrial Handheld UV Disinfection Light - Kills 99% of Viruses - UVC, Fluorescent - T8/G13 - 50' SOOW Cord - 180º Beam Angle

Product ID: 266927



Image: IND-HL-UVC-FL1524-50

Larson Electronics LLC manufactures a wide variety of products, including custom built to spec designs. The pictures displayed for this unit are a general representation of form factor for the product line and may not accurately represent this exact configuration in every detail due to custom builds and changes between similar products in our standard catalog. The specifics for this configuration are listed in the specification table and supporting documentation (CAD files, Dimensional Drawing, Name Plate Diagram, Wiring Diagram, etc.). This means that specific details (receptacles, plugs, wires, connections, mounting brackets, external finishes, etc.) may not be accurately represented in images vs specifications. Please review specifications and do not order based solely on images.

This unit is Made In USA - Manufactured in Texas

IND-HL-UVC-FL1524-50 UV Sanitation Light
Lamp Technology: UV-C Fluorescent
Dimensions: 27"-L x 3.25"-Dia
Weight: -
Voltage: 120V or 220V
Total Watts: 15W
Total UV Output: 4.8W
Single-Lamp UV Output: 4.8W
Effective UV Radiation (at 1 Meter) Per Lamp: 49.0 µW/cm²
Total Effective UV Radiation (at 1 Meter): 49.0 µW/cm²
Expected Lifespan: 8,000+ Hours
UV Wavelength: UV-C, 200nm - 280nm (253.4 nm)
Lamp Type: T8
Lamp Base: G13
Replacement Lamp: -
Beam Angle: 180º
Light Configuration: Flood
Amps: -
Ambient Operating Temp Range: -
Materials: Rubber, Copper-free Aluminum
Mounting: Hook or Handheld
Wiring: 50' 16/3 SOOW Cord w/ Cord Cap
Cord Cap:

Ratings/Features
NRTL Listed to UL 508A
NRTL Listed to CSA C22.2 No. 14
Short-wave Germicidal Light
Kills 99% of Viruses and Other Germs
Made in USA - Manufactured in Texas
EPA Reg. No 98409-1
EPA Est. No. 98409-TX-1

Special Orders - Requirements
Contact us for special requirements
Toll Free: 1-800-369-6671
Intl: 1-903-270-1187
Fax: 1-903-765-7664
E-mail:

5-15 Straight, 6-15 Straight, L5-15 Twist, L6-15 Twist, UK BS1363, Intl. Schuko, or Pigtail sales@larsonelectronics.com

PLEASE NOTE: UV-C light can cause temporary or permanent loss of vision, and temporary acute redness or ulceration (mild to severe sunburn) to exposed skin. To prevent exposure, do not operate the device in any application that allows UV-C light to be visible during operation. NEVER LOOK DIRECTLY AT THE BULB OR DISINFECTING TARGET ZONE. DO NOT touch bulb with bare hands. The oils in your skin will damage the lamp. Fingerprints will result in reduced performance and significantly reduce the lifespan of the lamp unless they are removed with alcohol. Please read instruction manual for UV safety requirements before operating.

This unit is Made In USA - Manufactured in Texas

The IND-HL-UVC-FL1524-50 from Larson Electronics is an Industrial Handheld UV Disinfection Light that can kill 99% of viruses, bacteria, mold, and spores on surfaces, including work stations, machines, tables, and more. This unit offers UV-C output at a range of 200nm - 280nm (253.4nm) and comes equipped with a swivel hook for hands-free operation. Protected by molded bumper guards, this UVC light features 50' of 16/3 SOOW cord.

Please note: This product produces UV light. Make sure to follow all safety guidelines and protocols found in the user manual. UVC light in the proper setting kills up to 99.9% of viruses, mold, spores, and bacteria. Click here to learn more about UVC and the coronavirus*

The IND-HL-UVC-FL1524-50 is a powerful sanitation solution for industrial sites and commercial facilities. Equipped with a UVC fluorescent lamp, this system offers 15 watts of output, within the 200nm - 280nm UV-C range (253.4 nm). The lights have an expected lifespan of 8,000+ hours and emits a flood beam pattern. This UV system operates on 120V or 220V and offers 180 degrees of coverage. With a recommended 20-25 minute exposure time for viruses, multiple devices can be purchased to cover larger areas quicker. The UV light can disinfect over 99% of bacteria, viruses, mold, and spores.

This UVC light features a rugged injection molded housing. The unit produces cool, glare-free and shadowless light that maximizes safety in work sites and lighting efficiency.

*****PLEASE NOTE: UV-C light can cause temporary or permanent loss of vision, and temporary acute redness or ulceration (mild to severe sunburn) to exposed skin. To prevent exposure, do not operate the device in any application that allows UV-C light to be visible during operation. NEVER LOOK DIRECTLY AT THE BULB OR DISINFECTING TARGET ZONE. DO NOT touch bulb with bare hands. The oils in your skin will damage the lamp. Fingerprints will result in reduced performance and significantly reduce the lifespan of the lamp unless they are removed with alcohol. Please read instruction manual for UV safety requirements before operating.*****

Distance from Lamp	Irradiance/Second	Exposure Time Required* Time (12mJ)	Beam Length	Beam Width
1/2 inch	1755.6 uW/cm2	6.84 seconds	18 inches	0.59 inches
1 inch	1702.8 uW/cm2	7.05 seconds	18 inches	1.19 inches
2 inch	1421.2 uW/cm2	8.45 seconds	18 inches	2.39 inches
3 inch	1003.2 uW/cm2	11.96 seconds	18 inches	3.58 inches

4 inch	818.4 uW/cm2	14.67 seconds	18 inches	4.77 inches
6 inch	567.6 uW/cm2	21.15 seconds	18 inches	7.15 inches
8 inch	433.4 uW/cm2	27.69 seconds	18 inches	9.54 inches
10 inch	349.36 uW/cm2	34.35 seconds	18 inches	11.92 inches
12 inch	285.12 uW/cm2	42.09 seconds	18 inches	14.3 inches
14 inch	235.4 uW/cm2	50.98 seconds	18 inches	16.7 inches
18 inch	158.4 uW/cm2	1.27 minutes	18 inches	21.45 inches

*Exposure time is based off of total irradiance over time. The above calculations are based on 12 mJ total exposure.

This is the standard exposure time recognized in the scientific community to deactivate viruses.

Larson Electronics recommends the 12 mJ exposure column for most applications.

For more information regarding UVC exposure times and UV effectiveness against coronaviruses, click here.

Click Photos to Enlarge



5-15 Straight Blade Plug
15 Amp / 125V Rated



L5-15 Twist Lock Plug
15 Amp / 125V Rated



L6-15 Twist Lock Plug
15 Amp / 250V Rated



UK BS1363 Straight Blade Plug
13 Amp / 250V Rated / Internal Fuse



Intl Schuko 2-Pin Plug
16 Amp / 250V Rated / Grounded



Flying Leads / Pigtail Wires

Wiring/Plug: This unit is equipped with 50 feet of 16/3 chemical and abrasion resistant SOOW cord that is fitted with an industrial grade cord cap for easy connection to common wall outlets. Plug options include standard 5-15 15 amp straight blade plug for 110V wall outlets with ground, standard 6-15 15 amp straight blade plug for 220-240V wall outlets with ground, NEMA L5-15 15 amp twist lock plug for 125V twist lock outlets, NEMA L6-15 15 amp twist lock plug for 240V twist lock outlets, British BS1363 13 amp fused 3-blade plug for United Kingdom outlets, or a two pin 16 amp rated Schuko plug with ground contact and socket for European outlets up to 250V. Alternatively, we can provide flying leads with no plug for hard wire applications or for operators who prefer to wire in user provided cord caps. Please choose pigtail option below for flying leads with no plug.

Mount: This handheld UV light contains a hook at the top of the light head for hands-free operation. The mounting component enables operators to secure the unit on poles, pipes, chains, small openings, hooks, and more. A handle facilitates up close sanitation of surfaces, work stations, heavy machinery, and other types of equipment.

Note on Environment: Sunlight and visible light fixtures do not impact the effectiveness of the disinfecting on this UVC sanitation product. Metal halide, high pressure sodium, fluorescent, and LED light fixtures can be left on. The UV radiation emitted from this product is not disrupted by any type of lighting in the environment. Put simply, NO it DOES NOT need to be dark in the area you plan to disinfect. The UV radiation is harmful to the eyes and skin, and that is why you should not be in the area while it is in operation. Please see user manual for additional safety information.

Suggested Applications: Sanitation, disinfection, retail spaces, lobbies, commercial locations, industrial parks, schools, public transportation hubs, airports, office buildings, medical centers, and more; kills 99% of viruses, bacteria, mold, and spores.

At Larson Electronics, we do more than meet your lighting needs. We also provide replacement, retrofit, and upgrade parts as well as industrial grade power accessories. Our craftsmen can custom build any lighting system and/or accessories to fit the unique demands of your operation. A commitment to honesty, quality, and dependability has made Larson Electronics a leader in the lighting and electronics business since 1973. Contact us today at 800-369-6671 or message sales@larsonelectronics.com for more information about our custom options tailored to meet your specific industry needs.

REV	DESCRIPTION	DATE
A	PRODUCTION RELEASE	05/01/2020

IND-HL-UVC-FL1524-50-5.15

LARSON ELECTRONICS®

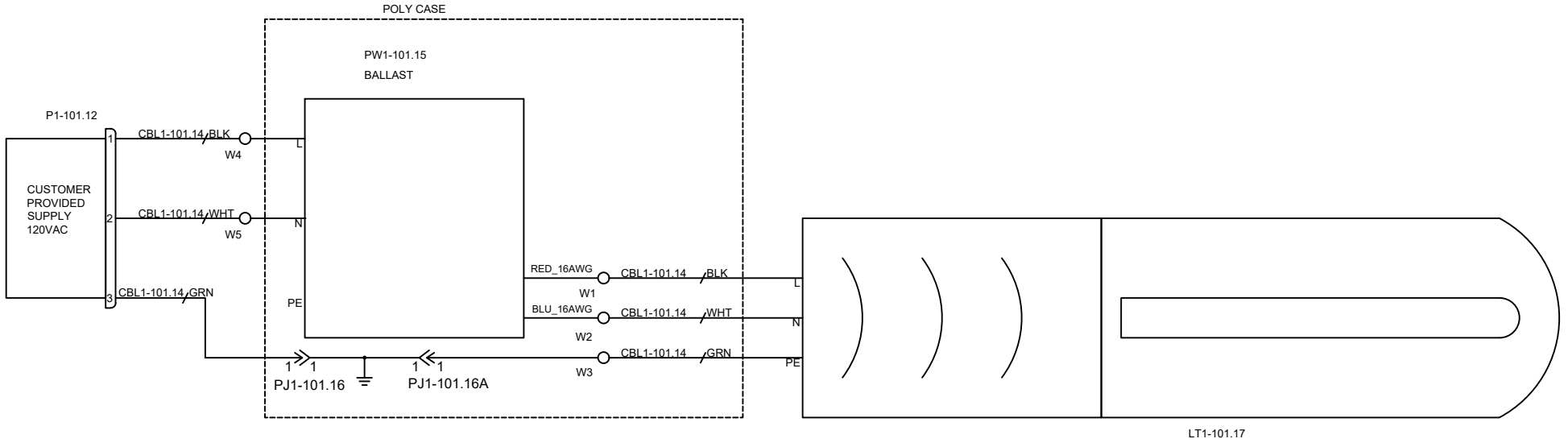

TAGS	QTY	CATALOG	DESCRIPTION
PJ1-101.16 PJ1-101.16A	2	UNV00008177	VINYL BLUE RING TERMINAL 16-14
P1-101.12	1	UNV00006731	Plug, Straight Blade, 15A, 125V NEMA 5-15
LT1-101.17	1	UNV00015244	15W FLUO LONG TUBE WORK LIGHT
		UNV00015102	MEDIUM BI-PIN BASE - GEMICIDAL TUBE LAMP
PW1-101.15	1	UNV00005770	32W 120VAC BALLAST 2 LAMPS
W1 W2 W3 W4 W5	5	UNV00009802	2 HOLES WAGO
CBL1-101.14	50FT	UNV00007524	16/3 SOOW CABLE- BLACK

LARSON ELECTRONICS
9419 E US HWY 175,
KEMP, TX 75143

TITLE: IND-HL-UVC-FL1524-50-5.15

DRAWN BY	DATE	REV
K.NGUYEN	05-01-2020	A
CHECKED BY	SHEET #	DRAWING #
S.DESAI	1 OF 1	101

Larson Electronics LLC
9419 E US HWY 175, Kemp, TX 75143
Phone: 800.369.6671

www.LarsonElectronics.com
Email: sales@LarsonElectronics.com
Fax: 903.765.7664



Larson Electronics LLC
9419 E US HWY 175, Kemp, TX 75143
Phone: 800.369.6671

www.LarsonElectronics.com
Email: sales@LarsonElectronics.com
Fax: 903.765.7664



Larson Electronics LLC
9419 E US HWY 175, Kemp, TX 75143
Phone: 800.369.6671

www.LarsonElectronics.com
Email: sales@LarsonElectronics.com
Fax: 903.765.7664



Larson Electronics LLC
9419 E US HWY 175, Kemp, TX 75143
Phone: 800.369.6671

www.LarsonElectronics.com
Email: sales@LarsonElectronics.com
Fax: 903.765.7664



Certification

Manufacturer: Larson Electronics LLC
Address: 9419 US-HWY 175
Kemp, Texas 75143

Declare the following equipment conforms to the standard(s) as listed:

Model: IND Series
Description: UV Light Machines and Light Fixtures

Evaluated Listings:

The IND Series UV Light Machines and UV Light Fixtures are certified to UL 508A and CSA C22.2 No 14 for industrial controls. Larson Electronics LLC is a certified “panel shop” and is certified for our engineering and manufacturing processes. Each unit is built to NEC and CEC electrical code. All electrical components used in the IND product line are certified to National Electric Code (NEC) for United States and Canadian Electric Code (CEC) for Canada. This includes all ballasts, sockets, tombstones, internal wiring, external wiring, buttons, relays, cord caps, and wire terminations. This is a requirement for our panel shop certification. Instead of certifying each part number, our shop is certified for our processes. This allows us to manufacture custom systems without the time delays associated with certifying each part number. Our shop undergoes regular audits for panel shop processes.

Each unit is inspected by our quality control department before shipment. Larson Electronics is an ISO 9001:2015 certified shop for quality control. Our shop undergoes regular audits for quality control processes.

Signed for and on behalf of: Larson Electronics, LLC
Place of issue: Kemp, TX

Signature: James Thomas

Name: James Thomas
Position: Operations Manager

LARSON ELECTRONICS LLC • 9419 E US HWY 175 • KEMP, TX 75143
p: 1-800-369-6671 • intl: 903-498-3363 • f: 903-498-3364 • sales@larsonelectronics.com

Form 3540-8 Accepted for Establishment LARSON ELECTRONICS LLC

From
helpdesk@epacdx.net

Re: Establishment Number: 98409-TX-1
EPA Region: 06

Larson Electronics LLC
Attn: Robert Bresnahan
9419 E US HWY 175

Kemp, TX 75143 USA

This email serves as notification of registration of the pesticide-producing establishment for which you applied, pursuant to Section 7 of the Federal Insecticide, Fungicide, and Rodenticide Act (FIFRA). The Form 3540-8 for establishment LARSON ELECTRONICS LLC has been accepted. The new Establishment Number is: 98409-TX-1. This establishment registration will remain in effect, provided pesticide reports on production and sales or distribution amounts are submitted annually as required.

Part 167 of the Code of Federal Regulations (40 CFR) requires your company to submit an initial report for Pesticide-Producing Establishments, EPA Form 3540-16, within 30 days of receipt of this email. You should submit electronically with the Section Seven Tracking System (SSTS) to ensure on-time delivery. You can find out how to register for e-reporting and submit your initial and annual reports quickly here: https://www.epa.gov/compliance/electronic-reporting-pesticide-establishments

Please note that the initial report asks for production amounts for year **2019**. **Failure to submit your Initial report(s) within 30 days may subject your establishment(s) to an administrative civil penalty.**

After the initial report, future reports must be submitted on a yearly basis. Production reports for establishments registered to produce pesticides and pesticidal devices are due by March 1st as long as the establishment is active, regardless of whether or not production has occured (regulations pursuant to Section 7 of FIFRA).

NOTE: EPA will not accept any faxes or emails of establishment initial or annual reports (EPA Form 3540-16).

Parts of the 40 CFR which apply to pesticide establishments are: (1) *Part 167-Registration of Pesticide and Active Ingredient Producing Establishments, Submission of Pesticide Reports* and (2) *Part 169-Books and Records of Pesticide Production and Distribution*.

Changes in name, address, or ownership of the company or any establishments are to be reported to this

office within thirty (30) days of the change. If your company decides to cease production of all pesticides and pesticidal-devices, you may request termination of the establishment(s). Requests for termination of establishments can be sent to the proper EPA Regional Coordinator in your area, or completed on our electronic reporting system at https://cdx.epa.gov.

The container of each pesticide product which is released for shipment must bear the EPA Establishment Number assigned to the establishment in which it was produced. This number, which is to be preceded by "EPA Est.", may appear in any suitable location on the label or immediate container. It must also appear on the outside container or wrapper of the package if the EPA Establishment Number on the immediate container cannot be clearly read.

For more information, FAQs and additional instructions please go to our website: https://www.epa.gov/compliance/pesticide-establishment-registration-and-reporting

UNITED STATES ENVIRONMENTAL PROTECTION AGENCY
WASHINGTON, D.C. 20460

Sep 23, 2020

OFFICE OF CHEMICAL SAFETY
AND POLLUTION PREVENTION

Robert Bresnahan
Larson Electronics LLC
9419 E US HWY 175

Kemp, TX 75143

Subject: Assignment of New EPA Company Number

Dear Registrant:

The Office of Pesticide Programs received your request for a company/distributor number. The company number assigned to you is 98409.

You are required to notify the Agency of any change in name or address. All requests for change of company name and/or address, appointment of agent or withdrawal of an agent's appointment, must be sent to the following address:

Document Processing Desk(COADR)
Office of Pesticide Programs(7504P)
U.S. Environmental Protection Agency
1200 Pennsylvania Avenue, N.W.
Washington, DC 20460

All products must be registered with the Agency prior to shipment and/or sale. Information on registering pesticide products can be obtained by calling the Registration Division Ombudsperson at (703) 308-8893. Requests for a Pesticide Registration Kit can be obtained via e-mail to: Hobgood.Sherada@epa.gov If you are only distributing a product you must complete the Notice of Supplemental Registration of Distributor (EPA form 8570-5). This form can also be obtained by calling the number listed above or can be downloaded at: https://www.epa.gov/pesticide-registration/pesticide-registration-manual-blank-forms.

Any production of pesticides, active ingredients or devices, including companies or establishments that import into the United States, must be conducted in a registered pesticide-producing or device-producing establishment. Information on registering an establishment can be downloaded at: https://www.epa.gov/compliance/epa-form-3540-8-application-registration-pesticide-producing-and-device-producing.

Sincerely,

Shirley A. Burgess

Front End Processing Staff
Information Services Branch
Information Technology & Resources Management Division

Jiangsu Suqian Hengyi
Light Source Material Co., Ltd.
Material Safety Data Sheet (MSDS)

SECTION 1 — CHEMICAL PRODUCT AND PRODUCER IDENTIFICATION

Mercury 99.9999%

Jiangsu Suqian Hengyi Light Source Material Co., Ltd.
Registered Office : Xinghong City South; Flat 605
Suqian City, Jiangsu Province, China
Postal Code 223800
Tel 86 527 84226126

SECTION 2 — PRODUCT NAME, COMPOSITION AND INFORMATION

Mercury Purity 99.9999% (By weight)
CAS Nr. 7439-97-6
Synonym Quicksilver; Colloidal Mercury; Metallic Mercury; Hydragyrum
Usage As raw material for arc discharge lamps

SECTION 3 — PHYSICAL AND CHEMICAL PROPERTIES

Odorless, silver color, very heavy liquid metal.
Soluble in nitric acids; Insoluble in water, alcohol and ether.
Chemical Formula : Hg
Formula Weight : 200.59

Boiling Point : 356.7℃
Melting Point : -38.8℃
Specific Gravity : 13.55

SECTION 4 — HEALTH HAZARDS

Extremely high health hazards resulting from ingestion, skin absorption and inhalation of fume or vapor. Direct absorption by respiratory and intestinal tract. Corrosive to skin, eyes and mucous membranes.

SECTION 5 — FIRST AID PRECAUTIONS

Consult a physician and seek medical attention for further treatment, observation and support after first aid.
Inhalation : Transfer to fresh air at once. Administer artificial respiration immediately in case of breathing difficulty.
Eye or External : Immediately flush with fresh water for at least 15 minutes.
Internal : Rinse mouth. Consult a physician or poison control at once.

SECTION 6 — FIRE FIGHTING PRECAUTIONS

扫描全能王 创建

Relatively stable, noncombustible liquid.
When heated to decomposition, emits toxic fumes of Hg.
Fire Fighting Instructions : Use dry chemical fire extinguisher to put out surrounding fire. Firefighters should wear PPE and SCBA with full facepiece operating in positive pressure mode.

SECTION 7 — SPILLAGE

Proliferation of droplets may result in toxic spillage, requiring special care in the clean up. Clean up all droplets and transfer to a safe container. Scatter zinc dust to amalgamate the spillage into solid. Ventilate and wash the area.

SECTION 8 — HANDLE AND STORAGE

Store in tightly enclosed corrosion-resistant glass or plastic containers; avoiding direct sun light and heat. Dispense in a plastic tray so that spillage can be easily recovered.

SECTION 9 — EXPOSURE CONTROLS AND PROTECTION

Always wear chemical splash goggles, chemical-resistant gloves and apron to avoid contact with eyes, skin and clothing. Ventilate the work area to maintain airborne concentration below exposure limits. Always wear a respirator with proper cartridges, or a positive pressure, air supplied respirator when handling this material in emergency situations (spill or fire). Exposure guidelines :
STEL 0.03 mg/m^3 ; Ceiling 0.1 mg/m^3 .

SECTION 10 — STABILITY AND REACTIVITY

Avoid ammonia, aluminum, potassium, lithium, sodium, bromine, halogens, sulfuric acid, oxidizing agents and nitric acid.
Shelf life : Good when stored properly.

SECTION 11 — TOXICOLOGY

Acute effects : Highly toxic, corrosive.
Chronic effects : Not all health aspects of this material have been fully investigated.
Target organs : Skin, respiratory system, CNS, kidneys and eyes.
Notes : Not all health risks of material have been fully studied.

SECTION 12 — ECOLOGICAL INFORMATION

Data not yet available.

扫描全能王 创建

SECTION 13 — DISPOSAL PRECAUTIONS

Follow all local regulations that may apply.

Returning material to a local Mercury recycler strongly recommended.

SECTION 14 — TRANSPORT INFORMATION

Shipping name : Mercury

Hazard Class : 8, Corrosive.

UN Number : UN2809

SECTION 15 — REGULATORY INFORMATION

US Federal : TSCA Listed.

On State Right to know lists in some states.

California – Warning : This product contains Mercury, a chemical known to the State of California to cause developmental reproductive Toxicity.

European / International Regulations

European Labeling in accordance with EC Directives

Hazard Symbols : T

Risk Phrases : R 23 Toxic by inhalation; R 33 Danger of cumulative effects.

SECTION 16 — DISCLAIMER

This Material Safety Data Sheet was composed based on information and tests believed to be reliable. This data sheet is to provide reference and guidance to relevant parties handling or transporting the material. Data included should not be quoted as challenge to any local regulations, shipping and insurance mandates. This data sheet constitutes no Warranty on the part of the producer.

March 01, 2016

扫描全能王 创建

intertek
Total Quality. Assured.



<- Back

Product Description

Title:	INDUSTRIAL CONTROL PANELS
Company:	LARSON ELECTRONICS LLC - Kemp, TX USA
Product Information:	Industrial Control Panels For General Use.
Evaluated to the following:	A representative sample of the listed devices have been tested, investigated and found to comply with the requirements of the Standard(s) for Industrial Control Panels (UL-508A) and are identified with the ETL Listed Mark.

<- Back

Contact Us

ETL listed products that are in doubt or for products that do not appear in the directory, please request a verification of certification.
Americas+1-888-347-5478 (or +1-847-660-7407)
Email etldirectory@intertek.com

Intertek Home
Product Directories
DLP on mobile devices

Inspector Center

Get up-to-date information on everything from our Accreditations to our Certifications and Marks. Learn more...

News

Intertek Unveils New Design for Product Safety and Quality Certification Marks. Learn more...

© 2010 Intertek All Rights Reserved.
All other product or service names are the property of their respective owners.

intertek
Total Quality. Assured.

<- Back

Product Description

Title:	INDUSTRIAL CONTROL EQUIPMENT
Company:	LARSON ELECTRONICS LLC - Kemp, TX USA
Product Information:	Industrial Control Panels For General Use. Industrial Control Panels Relating to Hazardous (Classified) Locations, Custom Industrial Control Panels. Power Distribution System, Model Nos. MGL, MPD, MGS series; Followed by AAK-PBB.FFF-SCC.GGG-EEXCCC.DDD; Where AA = 2,3,5,7,9,15,20,25,30,45,50,75; BB = 1P, 3P; FFF = 480,240,208,120; CC = 1P,3P; GGG = 480,240,208,120; EE = # of outlets; CCC = voltage; DDD = outlet amperage.
Evaluated to the following:	A representative sample of the listed devices have been tested, investigated and found to comply with the requirements of the Standard(s) for Industrial Control Equipment (CAN/CSA-C22.2 No. 14) and are identified with the cETL Listed Mark.

<- Back

Contact Us

ETL listed products that are in doubt or for products that do not appear in the directory, please request a verification of certification.
Americas+1-888-347-5478 (or +1-847-660-7407)
Email
etldirectory@intertek.com

Intertek Home
Product Directories
DLP on mobile devices

Inspector Center

Get up-to-date information on everything from our Accreditations to our Certifications and Marks. Learn more...

News

Intertek Unveils New Design for Product Safety and Quality Certification Marks. Learn more...

© 2010 Intertek All Rights Reserved.
All other product or service names are the property of their respective owners.

Larson Electronics LLC
9419 E US HWY 175, Kemp, TX 75143
Phone: 800.369.6671

www.LarsonElectronics.com
Email: sales@LarsonElectronics.com
Fax: 903.765.7664

Frequently Asked Questions (FAQ)

Q. How long does the fixture need to operate to kill viruses?

A. Please read time exposure chart in the spec sheet. This chart provides the coverage area and required times to meet proper dosages to deactivate viruses. Exposure time is dependent on the distance from the surface you are disinfecting. The further away, the longer time is needed.

Q. What if I want to disinfect a larger area than the coverage area that is listed in the specifications of this product?

A. Purchase a larger unit. We have products ranging from small areas to entire buildings. If you wish to move faster, the only solution is purchasing a product that has a higher output. Otherwise, refer to the exposure chart for the coverage area and exposure time required. Once exposure time has been met, you can move to the next surface.

Q. What if obstacles are in the way of the UV light while it is disinfecting?

A. You will need to move objects around and disinfect again for another 30 minutes. If the cart does not have direct line of sight, it will not disinfect. This is a non-ozone UV generating product so it does not penetrate through solid surfaces and will not reflect and clean the underside of objects or behind objects. If you do not have direct line of sight from the light, you will need to move it around or move the obstacles to create proper exposure.

Q. Does this product come with UV lamps?

A. Yes. This product will ship with UV lamps. The required UV lamps are included with your purchase.

Q. Is this unit safe to use in occupied areas?

A. No, and yes. This unit produces UV radiation. UV radiation is NOT safe for your skin or eyes. Because of the directional nature of this product, it does not produce a high risk for occupied areas when used correctly. If the lamp is positioned correctly, it could in theory be used in occupied areas, but this is not advised since the occupants may not understand the risks associated with UV lights. The user should always wear eye protection at minimum. Please read manual for UV safety requirements.

Q. Do I need to wear protective gear?

A. Yes. UV radiation is NOT safe for your skin or eyes. Please read manual for UV safety requirements.

Q. Is this product skin safe or eye safe?

A. No. UV radiation is not safe for the eyes or skin. Please read manual for UV safety requirements.

Q. Does this product generate ozone?

A. No. UV lights can be made as ozone-producing or non-ozone producing. Ozone producing lamps leaves radiation in the atmosphere and require a 20-30 minute time after lamps are turned off before the radiation levels dissipate to a safe level before you can re-enter the room/area. The products that Larson Electronics manufactures DO NOT use ozone-producing lamps. This means that the radiation stops the second the light turns off. Once the light is turned off, it is safe to return to the area being disinfected by the light. Please read manual for UV safety requirements.

Q. Does this product kill he SARS-CoV-2 coronavirus?

A. Please see below link for effectiveness against viruses, including the 2019 SARS-CoV-2 coronavirus:
https://www.larsonelectronics.com/images/product/LightingFacts/266985.PDF

Larson Electronics LLC
9419 E US HWY 175, Kemp, TX 75143
Phone: 800.369.6671

www.LarsonElectronics.com
Email: sales@LarsonElectronics.com
Fax: 903.765.7664

Q. **Does this product kill COVID-19?**

A. COVID-19 is the disease created from the SARS-CoV-2 coronavirus. Please see below link for effectiveness against viruses, including the 2019 SARS-CoV-2 coronavirus:
https://www.larsonelectronics.com/images/product/LightingFacts/266985.PDF