Larson Electronics LLC
9419 E US HWY 175, Kemp, TX 75143
Phone: 800.369.6671

www.LarsonElectronics.com
Email: sales@LarsonElectronics.com
Fax: 903.498.3364

RNT-EXPCMR-IP-POE-4MP-IR

***RENT* Explosion Proof Network IP Camera - 8.0MP Resolution, Built-in Infrared - 15FPS - IP66 Rated - N4X**

Product ID: 265999

Larson Electronics LLC manufactures a wide variety of products, including custom built to spec designs. The pictures displayed for this unit are a general representation of form factor for the product line and may not accurately represent this exact configuration in every detail due to custom builds and changes between similar products in our standard catalog. The specifics for this configuration are listed in the specification table and supporting documentation (CAD files, Dimensional Drawing, Name Plate Diagram, Wiring Diagram, etc.). This means that specific details (receptacles, plugs, wires, connections, mounting brackets, external finishes, etc.) may not be accurately represented in images vs specifications. Please review specifications and do not order based solely on images.

RNT-EXPCMR-IP-POE-4MP-IR Network Explosion Proof Camera

Dimensions: 8.18" x 7.65" x 5.20"
Camera Weight: -
Total Watts: 5W (Max)
Power Source: PoE (802.3af)
Image Sensor: 1/2.7" Progressive Scan CMOS sensor
Signal System: NTSC
Video Resolution: 8MP (3840*2160)
Frame Rate: 15fps (3840*2160)
Compression Type: H.265, H.264, MJPEG
Bit Rate: 128Kbps - 16Mbps
Focal Length: 2.8mm @F1.6, Fixed-focal
Max Field of View: 83°
Shutter Speed: Auto/Manual, 1 ~ 1/100000s
Min. Illumination: 0.01 lux (Color), F1.6, AGC ON
Infrared Light: Built-in
Day/Night: IR-cut filter with auto switch (ICR)
Digital Noise Reduction: 2D/3D DNR
Ethernet Interface: RJ45
Ethernet Speed: 10/100
Protocols: IPV4, IPV6, IGMP, ICMP, ARP, TCP, UDP, DHCP, PPPoE, RTP, RTSP, RTCP, DNS, DDNS, NTP, FTP, UPnP, HTTP, HTTPS, SMTP, 802.1x, SNMP, QoS, RTMP, SSL, TLS, SSH
Remote Configuration: Yes
Ambient Temperature Range: -22°F to +140°F
Housing Materials: Copper-free Aluminum Alloy
Lens Material: 3/8" Thick Tempered Glass
Mounting: Adjustable rear-mounted handle/bracket
Wiring Hub: (2) 3/4" NPT

Ratings / Features

Listed for United States & Canada
Class I, Divisions 1 & 2, Groups B, C, D
Class I, Zones 1 & 2, Groups IIB+H2, IIA
Class II, Divisions 1 & 2, Groups E, F, G
Class III, Divisions 1 & 2
NEMA 3R, 4, 7 (B, C, D), 9 (E, F, G)
NRTL Listed to UL 508A
NRTL Listed to UL 1203
NRTL Listed to CSA C22.2 No 14, 25, 30
Main steam and two sub streams
Capable of programming unique settings per stream
ONVIF (Profile S, Profile G, Profile T), API , SDK
True WDR (wide dynamic range) 120dB for auto adjusting
NDAA Compliant
IP66 Rated

Special Orders - Special Requirements

Contact us for special requirements
Toll Free: 1-800-369-6671
Intl: 1-903-270-1187
Fax: 1-903-498-3364

This unit is for rentals

The RNT-EXPCMR-IP-POE-4MP-IR Network Explosion Proof Camera from Larson Electronics is a remote inspection camera specifically designed for observation in hazardous locations. This explosion proof, dust/ignition proof, weather proof and tamper resistant camera provides the operator with a live feed from inside tanks, reactors, vessels or other hazardous locations. Equipped with built-in infrared, this remote inspection camera saves both time and money as well as contributing to workplace safety.

Camera Features: The RNT-EXPCMR-IP-POE-4MP-IR Network Explosion Proof Camera features a built-in 1/2.7" progressive-scan CMOS image sensor that delivers up to 8.0MP resolution at 15 fps. The wide angle fixed lens with 83° field of view is designed to cover large areas and work spaces. This explosion proof camera provides a crisp and clear image for everything within the 83° focal area. Total distance is dependent on mounting height and angle.

The explosion proof unit comes with built-in infrared lights. For additional infrared illumination, an external infrared light can be used with the explosion proof device (not included). For 12-24V DC applications, we recommend the Larson Electronics 12-watt explosion surface-mount infrared LED light (EXHL-TRN-LE3-IR-1224). As an alternative, we also offer the EXHL-TRN-LE3-IR-1227 for 120-240V AC applications

This remote inspection camera utilizes 120dB true Wide Dynamic Range, 3D Digital Noise Reduction and a true day/night IR-Cut Filter Removal to produce clear images in variable and low light conditions. The camera automatically switches from full color to IR mode when visible light falls below a certain level.

Wiring: Link-up with the camera is achieved via a customer provided RJ45 Ethernet cable which is ran back to the customer provided DVR system mounted outside the hazardous location. Camera power is delivered via the same Ethernet cable using Power over Ethernet (PoE) technology. This not only increases flexibility in deployment, but also provides time and cost savings as well.

Our explosion proof cameras with Power over Ethernet (PoE) features enable data transfers and power to be passed through a single Ethernet cable that is usually a Cat 3/Cat 5 cable or better. There are several types of PoE, which come with their own respective standard and maximum power to port capabilities. The IEEE 802.3af PoE standard, with a voltage range of 44.0 - 57.0V, offers 15.4W of DC power for each port. The IEEE 802.3at PoE standard, with a voltage range of 50.0 – 57.0V, provides up to 30W of DC power per port, which is ideal for surveillance cameras, antennas and network access points. The IEEE 802.3bt PoE standard, with a voltage range of 50.0 – 57.0V, provides 60W of DC power for each port. In order to utilize PoE properly, the components, such as the receiving unit and sending device, must be PoE compliant.

Recording: To record the stream from this camera, a NVR (network video recorder) is required. Larson Electronics provides a line of explosion proof, hazardous location, and non-classified NVR`s to work in conjunction with this explosion proof camera. This camera is live-view capable without any NVR system via remote access to the camera. Three streams are available, one main stream for recording and two sub streams for live viewing or additional resources. Each steam can be configured to different resolutions and frame rates.

Mounting: The RNT-EXPCMR-IP-POE-4MP-IR Network Explosion Proof Camera features an ATEX/IECEx certified copper-free aluminum alloy body and weighs a total of 6 pounds. The camera includes an adjustable rear-mounted polished stainless steel mounting bracket/handle. Additional accessory pole mounts and magnetic mounts are available separately.

Applications: Vessel, tank and reactor monitoring, remote observation of external facilities, monitoring of cleaning, spray patterns, mixing, foaming, reaction, and level.

At Larson Electronics, we do more than meet your lighting needs. We also provide replacement, retrofit, and upgrade parts as well as industrial grade power accessories. Our craftsmen can custom build any lighting system and/or

accessories to fit the unique demands of your operation. A commitment to honesty, quality, and dependability has made Larson Electronics a leader in the lighting and electronics business since 1973. Contact us today at 800-369-6671 or message sales@larsonelectronics.com for more information about our custom options tailored to meet your specific industry needs.

REV	DESCRIPTION	DATE
A	PRODUCTION RELEASE	02/17/2020

EXPCMR-IP-POE-4MP-IR

LARSON ELECTRONICS®

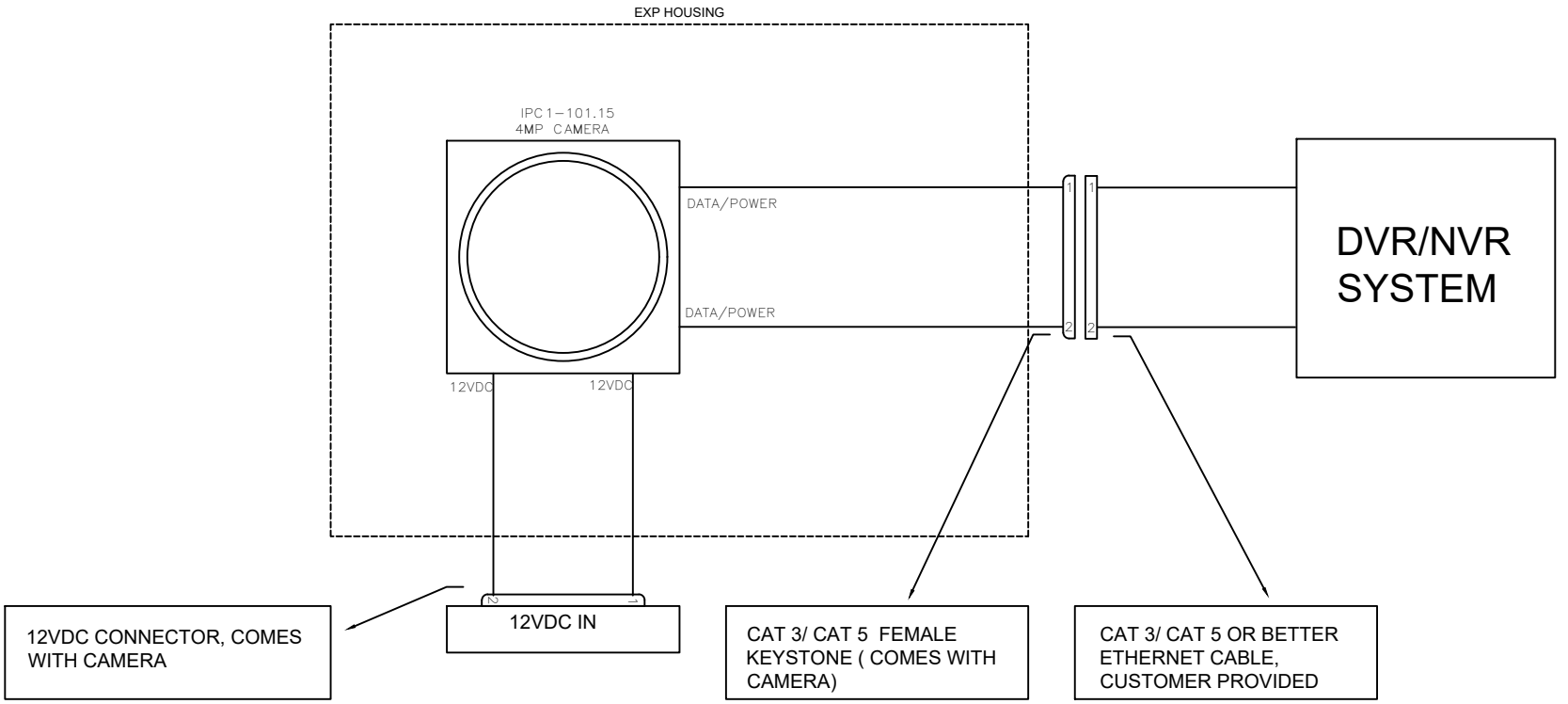

TAGS	QTY	CATALOG	DESCRIPTION
IPC1-101.15	1	UNV00004234	5MP IP 120 Ft IR WDR Bullet 2.8mm H.265 Black

LARSON ELECTRONICS
9419 E US HWY 175,
KEMP, TX 75143

TITLE	EXPCMR-IP-POE-4MP-IR		
DRAWN BY	K.NGUYEN	DATE	02-17-2020	REV	A
CHECKED BY	S.DESAI	SHEET #	1 OF 1	DRAWING #	101

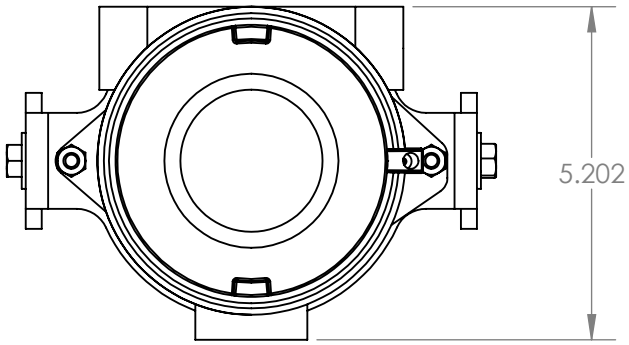

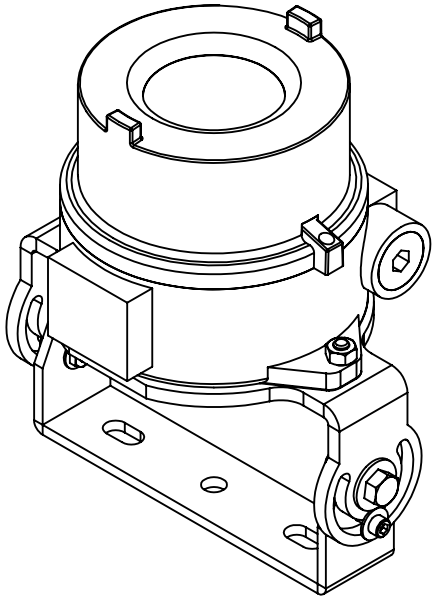

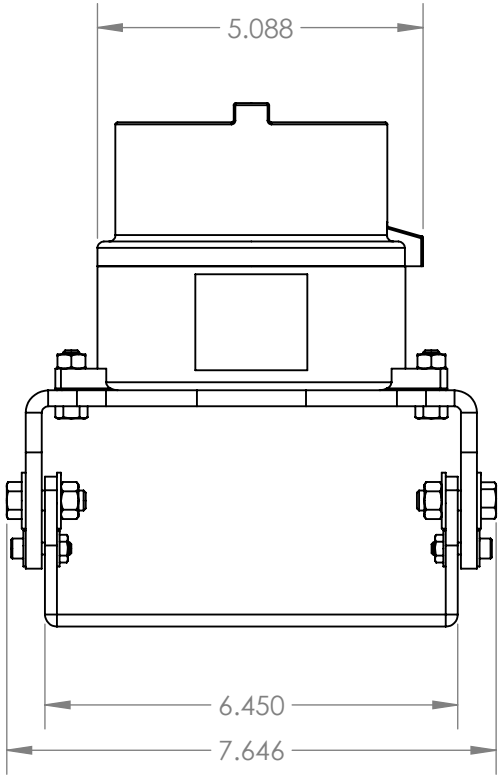

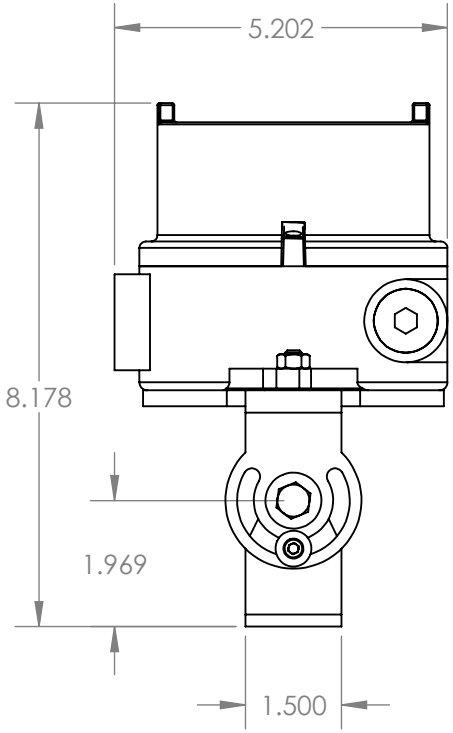

LARSON ELECTRONICS

TITLE:

EXPCMR-IP-POE-4MP-IR

PROPRIETARY AND CONFIDENTIAL
THE INFORMATION CONTAINED IN THIS DRAWING IS THE SOLE PROPERTY OF LARSON ELECTRONICS LLC. ANY REPRODUCTION IN PART OR AS A WHOLE WITHOUT THE WRITTEN PERMISSION OF LARSON ELECTRONICS LLC IS PROHIBITED.

		NAME
DIMENSIONS ARE IN INCHES	DRAWN	CHRIS THAUER
MATERIAL	CHECKED	JEREMY BLANKENSHIP
DO NOT SCALE DRAWING		

SIZE	DWG. NO.	REV
A		
SCALE: 1:3		SHEET 1 OF 2

5 4 3 2 1

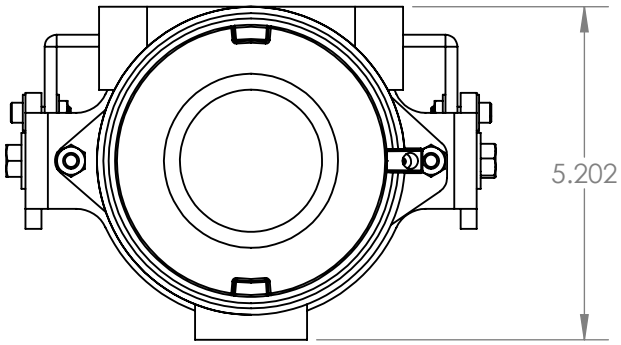

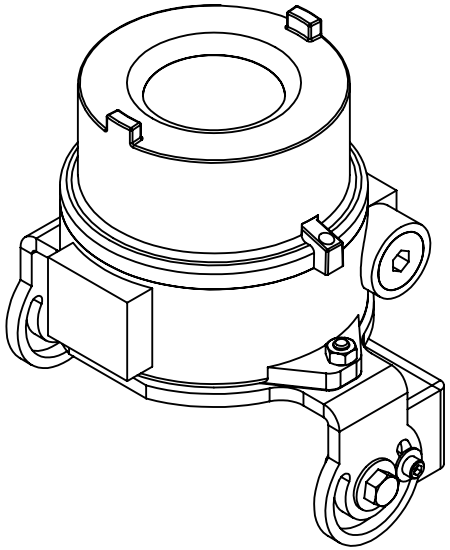

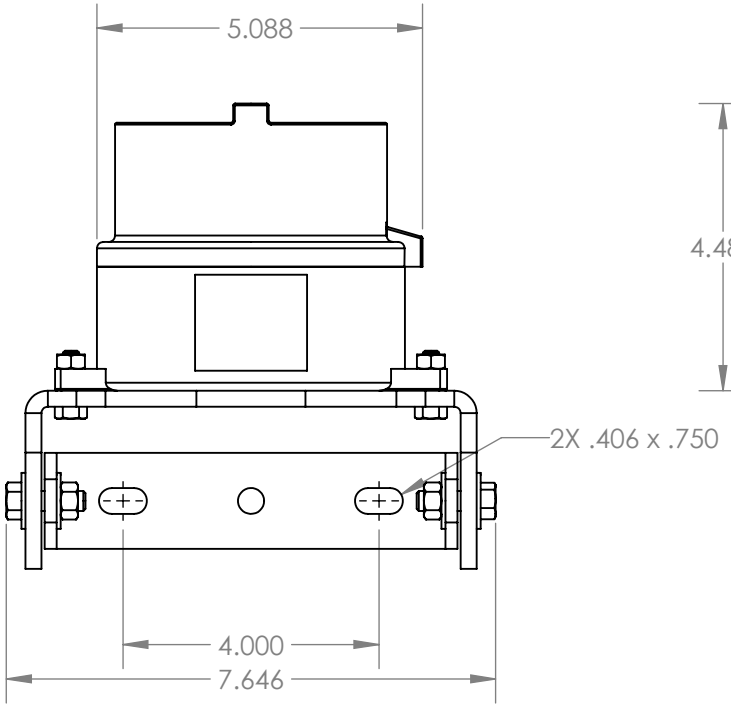

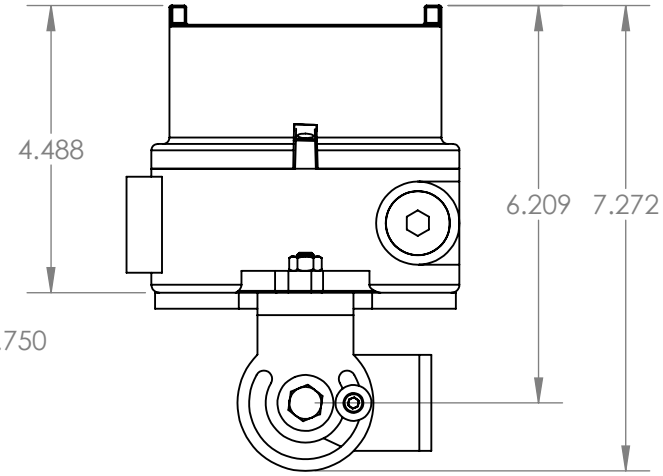

LARSON ELECTRONICS

TITLE:

EXPCMR-IP-POE-4MP-IR

PROPRIETARY AND CONFIDENTIAL
THE INFORMATION CONTAINED IN THIS DRAWING IS THE SOLE PROPERTY OF LARSON ELECTRONICS LLC. ANY REPRODUCTION IN PART OR AS A WHOLE WITHOUT THE WRITTEN PERMISSION OF LARSON ELECTRONICS LLC IS PROHIBITED.

		NAME			
DIMENSIONS ARE IN INCHES	DRAWN	CHRIS THAUER	SIZE A	DWG. NO.	REV
MATERIAL	CHECKED	JEREMY BLANKENSHIP			
DO NOT SCALE DRAWING			SCALE: 1:3		SHEET 2 OF 2

5 4 3 2 1

ATTENTION: COUVERCLE CONCU POUR ÊTRE UTILISÉ
AVEC LAS BOÎTES DE SORTIE NO HKB O 2HKB
FABIQUÉE PAR KILLARK. GARDER LE
COUVERCLE BIEN FERME TANT QUE LES
CIRCUITS SONT SOUS TENSION.
66Y8
AS TO EXPLOSION & FIRE
HAZARD ONLY. ENCLOSURE
ACCESSORY FOR USE IN HAZARDOUS
LOCATIONS: CL. I, GR. B, C & D; CL. II,
GR. E, F & G; CL. III; ENCL. TYPE 3 & 4
CAUTION: THIS COVER IS FOR USE WITH KILLARK
ENCLOSURE BODIES, CAT. NOS., HKB, HKBO OR 2HKB.
TO REDUCE THE RISK OF IGNITION OF HAZARDOUS
ATMOSPHERES, DISCONNECT THE SUPPLY CIRCUIT
BEFORE OPENING. KEEP COVER TIGHT WHILE
CIRCUITS ARE ALIVE.

MADE
IN U.S.A.
CAT. NO.
66Y8
CAUTION: THIS ENCLOSURE BODY IS FOR USE WITH KILLARK COVERS.
CAT. NOS. HER, HK20, HK40, HK9L, HK19LD, HK22LD, HK1D & HK4LD (NO FM).
WARNING: TO REDUCE THE RISK OF IGNITION OF HAZARDOUS ATMOSPHERES,
A CONDUIT SEAL MUST BE INSTALLED WITHIN 18" OF THE ENCLOSURE.
KEEP ASSEMBLY TIGHTLY CLOSED WHILE CIRCUITS ARE ALIVE.
ATTENTION: NOTICE DE SÉCURITÉ: CONDUIT POUR ÉTRE UTILISÉ AVEC LE
COUVERCLE NO. HER, HK20, HK40, HK9L, HK22LD, HK1D OU HK4LD (NO FM).
UN SCELLEMENT DOIT ÊTRE INSTALLÉ À MOINS DE 18 IN. DU BOÎTIER.
GARDER LE COUVERCLE BIEN FERMÉ TANT QUE LES CIRCUITS SONT SOUS
TENSION.

05
MISTER
Approved

Certification

Manufacturer: Larson Electronics LLC
Address: 9419 US-HWY 175
Kemp, Texas 75143

Declare the following equipment conforms to the standard(s) as listed:

Model: EXPCMR Series
Description: Explosion Proof Camera

Evaluated Listings:

UL: FTRV.E83969, BGYM.E83969, FTRX.E150827 – NEC / United States standards
UL: FTRV.E83969, BGYM7.E83969, FTRX7.E150827 – CEC / Canada standards
UL: DEMKO 06 ATEX 141023X, DEMKO 06 ATEX 0521635X **–** ATEX standards
UL: IEC Ex UL 14.0060X, IEC Ex UL 14.0069X – IEC Ex standards
CSA: LR11716 – CEC / Canada standards

The EXPCMR Series is certified to NEC, CEC, ATEX, and IEC Ex standards for hazardous locations for:

- NEC: Class I, Divisions 1&2, Groups B, C, D; Class II, Divisions 1&2, Groups E, F, G
- NEC: Class I, Zones 1 & 2, Groups IIB + H2, IIA
- CEC: Class I, Divisions 1&2, Groups B, C, D; Class II, Divisions 1&2, Groups E, F, G
- CEC: Class I, Zones 1 & 2, Groups IIB + H2, IIA
- ATEX: Ex II 2 G D, -60°C ≤ Ta ≤ +70°C
- IEC EX: Ex db IIC “T4...T3” Gb, Ex e IIC “T4...T3” Gb, Ex tb IIIC “T110°C...T140°C” Db IP66, -60°C ≤ Ta ≤ +70°C

The EXPCMR Series is comprised of a Killark HK series device enclosure. This device enclosure contains a low voltage camera, power supply, LED assembly, custom mounting of the electronics, wire connections, and an aluminum mounting bracket for the enclosure. This assembly is built to NEC, CEC, ATEX, and IEC standards for hazardous locations.

Signed for and on behalf of: Larson Electronics, LLC
Place of issue: Kemp, TX

Signature: James Thomas

Name: James Thomas
Position: Operations Manager

intertek
Total Quality. Assured.

<- Back

Product Description

Title:	INDUSTRIAL CONTROL PANELS
Company:	LARSON ELECTRONICS LLC - Kemp, TX USA
Product Information:	Industrial Control Panels For General Use.
Evaluated to the following:	A representative sample of the listed devices have been tested, investigated and found to comply with the requirements of the Standard(s) for Industrial Control Panels (UL-508A) and are identified with the ETL Listed Mark.

<- Back

Contact Us

ETL listed products that are in doubt or for products that do not appear in the directory, please request a verification of certification.
Americas+1-888-347-5478 (or +1-847-660-7407)
Email etldirectory@intertek.com

Intertek Home
Product Directories
DLP on mobile devices

Inspector Center

Get up-to-date information on everything from our Accreditations to our Certifications and Marks. Learn more...

News

Intertek Unveils New Design for Product Safety and Quality Certification Marks. Learn more...

© 2010 Intertek All Rights Reserved.
All other product or service names are the property of their respective owners.

intertek
Total Quality. Assured.

<- Back

Product Description

Title:	EXPLOSION-PROOF & DUST IGNITION-PROOF ELECTRICAL EQUIPMENT FOR USE IN HAZARDOUS (CLASSIFIED) LOCATIONS
Company:	LARSON ELECTRONICS LLC - Kemp, TX USA
Product Information:	Explosion-proof or dust-ignition-proof Industrial Control Panels for use in Hazardous (Classified) Locations, Model Nos. Custom Industrial Control Panels
Evaluated to the following:	A representative sample of the listed devices have been tested, investigated and found to comply with the requirements of the Standard(s) for Explosion-Proof and Dust Ignition-Proof Electrical Equipment for Use in Hazardous (Classified) Locations (UL-1203) and are identified with the ETL Listed Mark.

<- Back

Contact Us

ETL listed products that are in doubt or for products that do not appear in the directory, please request a verification of certification.
Americas+1-888-347-5478 (or +1-847-660-7407)
Email etldirectory@intertek.com

Intertek Home
Product Directories
DLP on mobile devices

Inspector Center

Get up-to-date information on everything from our Accreditations to our Certifications and Marks. Learn more...

News

Intertek Unveils New Design for Product Safety and Quality Certification Marks. Learn more...

© 2010 Intertek All Rights Reserved.
All other product or service names are the property of their respective owners.

intertek
Total Quality. Assured.

<- Back

Product Description

Title:	INDUSTRIAL CONTROL EQUIPMENT
Company:	LARSON ELECTRONICS LLC - Kemp, TX USA
Product Information:	Industrial Control Panels For General Use. Industrial Control Panels Relating to Hazardous (Classified) Locations, Custom Industrial Control Panels. Power Distribution System, Model Nos. MGL, MPD, MGS series; Followed by AAK-PBB.FFF-SCC.GGG-EEXCCC.DDD; Where AA = 2,3,5,7,9,15,20,25,30,45,50,75; BB = 1P, 3P; FFF = 480,240,208,120; CC = 1P,3P; GGG = 480,240,208,120; EE = # of outlets; CCC = voltage; DDD = outlet amperage.
Evaluated to the following:	A representative sample of the listed devices have been tested, investigated and found to comply with the requirements of the Standard(s) for Industrial Control Equipment (CAN/CSA-C22.2 No. 14) and are identified with the cETL Listed Mark.

<- Back

Contact Us

ETL listed products that are in doubt or for products that do not appear in the directory, please request a verification of certification.
Americas+1-888-347-5478 (or +1-847-660-7407)
Email etldirectory@intertek.com

Intertek Home
Product Directories
DLP on mobile devices

Inspector Center

Get up-to-date information on everything from our Accreditations to our Certifications and Marks. Learn more...

News

Intertek Unveils New Design for Product Safety and Quality Certification Marks. Learn more...

© 2010 Intertek All Rights Reserved.
All other product or service names are the property of their respective owners.

intertek
Total Quality. Assured.

<- Back

Product Description

Title:	ENCLOSURES
Company:	LARSON ELECTRONICS LLC - Kemp, TX USA
Product Information:	Explosion-proof or dust-ignition-proof Industrial Control Panels for use in Hazardous (Classified) Locations, Model Nos. Custom Industrial Control Panels Luminaires, Model Nos. EPL-48-2L-LED-SFC, EPL-24-2L-LED-SFC. for use in Hazardous Locations: Class I, Div. 1, Groups C and D T5 or T6 -20°C < Tamb < 40°C Class II, Div. 1., Groups E, F, and G; Class III Div.1 T3B -20°C < Tamb < 40°C
Evaluated to the following:	A representative sample of the listed devices have been tested, investigated and found to comply with the requirements of the Standard(s) for Enclosures for use in Class II, Groups E, F, G Hazardous Locations (CAN/CSA-C22.2 No. 25) and are identified with the cETL Listed Mark.

<- Back

Contact Us

ETL listed products that are in doubt or for products that do not appear in the directory, please request a verification of certification.
Americas+1-888-347-5478 (or +1-847-660-7407)
Email etldirectory@intertek.com

Intertek Home
Product Directories
DLP on mobile devices

Inspector Center

Get up-to-date information on everything from our Accreditations to our Certifications and Marks. Learn more...

News

Intertek Unveils New Design for Product Safety and Quality Certification Marks. Learn more...

© 2010 Intertek All Rights Reserved.
All other product or service names are the property of their respective owners.

intertek
Total Quality. Assured.

<- Back

Product Description

Title:	EXPLOSION-PROOF ENCLOSURES FOR USE IN CLASS I HAZARDOUS LOCATIONS
Company:	LARSON ELECTRONICS LLC - Kemp, TX USA
Product Information:	Explosion-proof or dust-ignition-proof Industrial Control Panels for use in Hazardous (Classified) Locations, Model Nos. Custom Industrial Control Panels
Evaluated to the following:	A representative sample of the listed devices have been tested, investigated and found to comply with the requirements of the Standard(s) for Explosion-Proof Enclosures for Use in Class I Hazardous Locations (CAN/CSA-C22.2 No. 30) and are identified with the cETL Listed Mark.

<- Back

Contact Us

ETL listed products that are in doubt or for products that do not appear in the directory, please request a verification of certification.
Americas+1-888-347-5478 (or +1-847-660-7407)
Email etldirectory@intertek.com

Intertek Home
Product Directories
DLP on mobile devices

Inspector Center

Get up-to-date information on everything from our Accreditations to our Certifications and Marks. Learn more...

News

Intertek Unveils New Design for Product Safety and Quality Certification Marks. Learn more...

© 2010 Intertek All Rights Reserved.
All other product or service names are the property of their respective owners.

EU Declaration Of Conformity

Manufacturer :	Killark Electric , Div of Hubbell Inc.(Delaware), 2112 Fenton Logistics Park Blvd , Fenton, MO 63026, USA Tel : (314) 531-0460 | Email: killarkinfo@hubbell.com

Declares in its sole responsibility that the product mentioned below

Product Designation :	Increased Safety Enclosures with Terminal Blocks
Type Designation :	HK Series

is in conformity with the essential protection requirements of the following Directive(s),Certification Scheme(s) and Standard(s).

Directive(s) / Scheme(s)	Standard(s)
2014/34/EU ATEX Directive	EN 60079-0:2012+A11:2013 EN 60079-7:2015 EN 60079-31:2014
IEC Certification Scheme For Explosive Atmosphere	IEC 6007-0:2011, Ed. 6.0 IEC 60079-7:2015, Ed. 5.0 IEC 60079-31:2013, Ed. 2.0
Others	EN 60529:1991+A1:2000+A2:2013

Type Examination Certificate	
ATEX	IECEx
DEMKO 06 ATEX 0521635X Rev. 1	IECEx UL 14.0069X Issue No. 1

Certification Body	
ATEX	IECEx
UL International DEMKO A/S, Lyskaer 8, P.O. Box 514, DK-2730, Herlev, Denmark Reg No.: 0539	UL LLC, 333 Pfingsten Rd. Northbrook IL 60062-2096 United States Of America

Marking (Note 1)	
ATEX	IECEx
II 2G Ex eb IIC T4...T3 Gb II 2D Ex tb IIIC T110 ^{0}C ...T140 ^{0}C Db IP66 CE 2813 Ta = -60 ^{0}C to +70 ^{0}C	Ex eb IIC T4...T3 Gb Ex tb IIIC T110 ^{0}C ...T140 ^{0}C Db IP66 T_a = -60 ^{0}C to +70 ^{0}C

Note 1: Ratings provided are maximum ratings and may vary depend on the components used and their installation.Refer Certificate,Installation & Operating manual and rating plate on equipment for details.

QAN compliance has been approved by Notified Body CSA Group Netherlands B.V.,Utrechtseweg 310,6812 AR, Arnhem,Netherlands. (Notified Body number 2813).

To verify the status and authencity of IECEx Certificate of Conformity, please visit Official IECEx Website

Signature :

Name : Tom Michalski
Designation : Certifications Manager
Place and Date : Fenton, 25-10-2019

Material Safety Data Sheet

To Whom It May Concern,

The Larson Electronics LLC EXPCMR industrial line of cameras for hazardous locations are considered "ARTICLES" under 29 CFR 1910-1200, the OSHA Hazard Communication Standard, and do not require a Material Safety Data Sheet (MSDS). This document does not expire.

Articles are specifically exempt from the regulations of this standard. OSHA defines an article as follows:

1910-1200(c) – Article means a manufactured item other than a fluid or particle:

i. Which is formed to a specific shape or design during manufacture;
ii. Which has end use function(s) dependent in whole or in part upon its shape or design during end use; and
iii. Which under normal conditions does not release more than very small quantities.

The "hazardous location" and "explosion proof" are terminology for the environment where these products will be installed. This is not to be confused with "hazardous materials;" this product does not contain any hazardous materials.

Regards,

Ray Smith

Ray Smith
Larson Electronics, LLC.

LARSON ELECTRONICS LLC • 9419 E US HWY 175 • KEMP, TX 75143
p: 1-800-369-6671 • intl: 903-498-3363 • f: 903-498-3364 • sales@larsonelectronics.com

CERTIFICATE OF COMPLIANCE

Certificate Number	E150827
Report Reference	E150827-19920928
Issue Date	2020-MARCH-19
Issued to:	KILLARK, DIV OF HUBBELL INC (DELAWARE) 2112 Fenton Logistics Park Blvd Fenton MO 63026
This certificate confirms that representative samples of	ENCLOSURE ACCESSORIES FOR USE IN HAZARDOUS LOCATIONS SEE ADDENDUM PAGE Have been investigated by UL in accordance with the Standard(s) indicated on this Certificate.
Standard(s) for Safety:	UL 1203, STANDARD FOR EXPLOSION-PROOF AND DUST-IGNITION-PROOF ELECTRICAL EQUIPMENT FOR USE IN HAZARDOUS (CLASSIFIED) LOCATIONS.
Additional Information:	See the UL Online Certifications Directory at https://iq.ulprospector.com for additional information.

This *Certificate of Compliance* does not provide authorization to apply the UL Mark. Only the UL Follow-Up Services Procedure provides authorization to apply the UL Mark.

Only those products bearing the UL Mark should be considered as being UL Certified and covered under UL's Follow-Up Services.

Look for the UL Certification Mark on the product.

Bruce Mahrenholz, Director North American Certification Program

UL LLC

Any information and documentation involving UL Mark services are provided on behalf of UL LLC (UL) or any authorized licensee of UL. For questions, please contact a local UL Customer Service Representative at http://ul.com/aboutul/locations/

CERTIFICATE OF COMPLIANCE

Certificate Number E150827
Report Reference E150827-19920928
Issue Date 2020-MARCH-19

This is to certify that representative samples of the product as specified on this certificate were tested according to the current UL requirements.

Enclosure accessories for use in Class I, Groups B, C, and D; Class II, Groups E, F, and G hazardous locations having the following designations.

Cat. No. HKB, HKBD, 2HKB, HKSB or 2HKSB enclosure body followed by -01, -02, -20, -21, -22, -01S, -02S, -21S, -22S, -2S1S, -2S2S, -2SO, -2S1, or -2S2; Cat. No. HFC, HK2D, HK4D, HKGL, HK2GLD, HFSC, HKS4D, HKSGL, or HKS2GLD enclosure covers.

Enclosure accessories for use in Class I, Groups A, B, C and D; Class II, Groups E, F and G hazardous locations having the following designations.

Cat. No. HKBX enclosure body followed by -10, -1S, -20, -2S, -M20, or -M25, followed by -SM, -2S, -M25, -MX; HKBX Series Cat. No. HFCX, HKXGL, HKX2D, and HKX2GLD enclosure covers.

Bruce Mahrenholz, Director North American Certification Program

UL LLC

Any information and documentation involving UL Mark services are provided on behalf of UL LLC (UL) or any authorized licensee of UL. For questions, please contact a local UL Customer Service Representative at http://ul.com/aboutul/locations/

CERTIFICATE OF COMPLIANCE

Certificate Number	E83969
Report Reference	E83969-19890322
Issue Date	2020-MARCH-19
Issued to:	KILLARK, DIV OF HUBBELL INC (DELAWARE) 2112 Fenton Logistics Park Blvd Fenton MO 63026
This certificate confirms that representative samples of	ENCLOSURES FOR USE IN HAZARDOUS LOCATIONS. ENCLOSURES FOR USE IN ZONE CLASSIFIED HAZARDOUS LOCATIONS. SEE ADDENDUM PAGE Have been investigated by UL in accordance with the Standard(s) indicated on this Certificate.
Standard(s) for Safety:	UL 1203, STANDARD FOR EXPLOSION-PROOF AND DUST-IGNITION-PROOF ELECTRICAL EQUIPMENT FOR USE IN HAZARDOUS (CLASSIFIED) LOCATIONS.
Additional Information:	See the UL Online Certifications Directory at https://iq.ulprospector.com for additional information.

This *Certificate of Compliance* does not provide authorization to apply the UL Mark. Only the UL Follow-Up Services Procedure provides authorization to apply the UL Mark.

Only those products bearing the UL Mark should be considered as being UL Certified and covered under UL's Follow-Up Services.

Look for the UL Certification Mark on the product.

Bruce Mahrenholz, Director North American Certification Program

UL LLC

Any information and documentation involving UL Mark services are provided on behalf of UL LLC (UL) or any authorized licensee of UL. For questions, please contact a local UL Customer Service Representative at http://ul.com/aboutul/locations/

CERTIFICATE OF COMPLIANCE

Certificate Number	E83969
Report Reference	E83969-19890322
Issue Date	2020-MARCH-19

This is to certify that representative samples of the product as specified on this certificate were tested according to the current UL requirements.

Cat. No. HKB, HKBD, or HKSB (HKB and HKSB may be prefixed by 2) followed by B, GL, 1GLD, 1D, 2GLD, 2D, 4GLD or 4D may be followed by C, may be followed by B, GL, 1GLD, 1D, 2GLD, 2D, 4GLD or 4D, may be followed by C, -10, -1S, -20, and -2S, may be followed by –MOD for Class I, Groups B, C, and D; Class II, Groups E, F, and G; Class III ; Class I, Zone 1, AEx db IIC Hazardous Locations.

Cat. No. HKBX, may be followed by B, GL, 2D or 2GLD, may be followed by 10, 1S, 20, 2S, M20, or M25, may be followed by SM, 2S, M25, or MX for use in Class I, Groups A, B, C and D; Class II, Groups E, F, and G; Class III Hazardous Locations.

Service Temperature: -60°C to +70°C.

Type 3, 4 and 4X Rated.

Bruce Mahrenholz, Director North American Certification Program

UL LLC

Any information and documentation involving UL Mark services are provided on behalf of UL LLC (UL) or any authorized licensee of UL. For questions, please contact a local UL Customer Service Representative at http://ul.com/aboutul/locations/

Certification Record

Inc. (Delaware)
2112 Fenton Logistics
Park Blvd,
Fenton
Missouri
United States
63026

OUTLET BOXES AND FITTINGS-Boxes - For Hazardous Locations

Contact an Expert (https://www.csagroup.org/contact/)

Class I, Groups B, C, and D; Class II, Groups E, F and G; Class III, Types 3, 4 and 4X CSA (complete enclosures and component packaged).

- HK and 2HK Series instrument enclosure (Component Packaged): HKB, HKSB, HKBD, 2HKB, or 2HKSB box with optional covers: HFC, HFSC, HKGL, HKSGL, HK1D, HKS2D, HK4D, HKS4D, HK1GLD, HK2GLD, HKS2GLD or HK4GLD denoting flat (F), dome (D), and window covers (GL); with 3/4 in. conduit entries.
- HK and 2HK Series instrument enclosures, Cat No: HKB, HKSB, HKBD, 2HKB, or 2HKSB; may be followed with the suffix 01, 02, 20, 21, 22, 01S, 02S, 21S, 22S, 2S1S, 2S2S, 2SO, 2S1, or 2S2.
- HK Series instrument enclosures, Cat No: HKB, HKSB, or HKBD followed by Suffix B, 1D, 2D, 4D, GL, 1GLD, 2GLD or 4GLD; may be followed with the suffix letter C; with 3/4 in. max conduit entries.
- 2HK Series instrument enclosures Cat No: 2HKB, 2HKSB followed by suffix B, 2D, 4D, GL, or 2GLD, followed by suffix B, 2D, 4D, GL, or 2GLD; may be followed with the suffix letter C; may be followed with the suffix -MOD; with 3/4 in. conduit entries.

Note: Series HK, 2HK and HKB instrument enclosures with or without optional covers (component packaged) when suffix S is added to the Cat No it denotes 316 stainless steel construction. In addition, when suffix -4X is added to the Cat No it denotes enclosure type rating 4X.

Class I, Groups A, B, C, and D; Class II, Groups E, F and G; Class III, Types 3, 4 and 4X; Ambinet Range (-60C to + 70C) (Complete enclosures and component packaged).

- No. HKBX, may be followed by B, GL, 2D or 2GLD, may be followed by 10, 1S, 20, 2S, M20, or M25, may be followed by SM, 2S, M25, or MX. HKBX Series Cat. No. HFCX, HKXGL, HKX2D, and HKX2GLD enclosure covers.

- Outlet Boxes, Cat No SPM25131N34 and SPM25132N34, conduit 4 in. max.
- Series GR outlet boxes (component packaged); Cat No GRBB conduit 1-1/2 in max with optional covers GRB-BC, 2GRBD, 4GRBD, GL-275; Cat No GREB conduit 2 in max with

(https://www.csagroup.org/) Testing & Certification Standards About

Careers Store Contact English

We're always here to help. Let's talk.

We're here to answer your questions and help you get started right away. Call or send us a message anytime.

Contact Us (https://www.csagroup.org/contact)

Contact an Expert (https://www.csagroup.org/contact/)

(https://www.csagroup.org/)

CSA OnDemand™ (http://store.csagroup.org/ondemand/s/?language=en_US)

Informs & Notices (/informs-notices/)

Submit an Incident Report (/submit-a-report)

Agreement on Acceptance of Components (/agreement-acceptance-components/)

CSA Communities (http://community.csagroup.org/login.jspa?referer=%252Findex.jspa)

Alerts & Recalls (/product-alerts-recalls/)

Report Suspect Counterfeit Marks (/testing-certification/marks-labels/brand-protection/reporting-suspect-counterfeit-marks)

Resources & Insights (/resources-insights/)

Standards Research (/standards/standards-research/)

CSA Group Product Listing (/testing-certification/product-listing/)

Sign up for our Newsletter (https://www.csagroup.org/newsletter/)

(http://www.facebook.com/CSAGroup) (http://www.linkedin.com/company/csa-group/) (https://twitter.com/CSA_Group/) (http://www.youtube.com/user/csastandards/)

Contact an Expert (https://www.csagroup.org/contact/)

© 2020 CSA Group (https://www.csagroup.org)

Certification

Manufacturer: Larson Electronics LLC
Address: 9419 US-HWY 175
Kemp, Texas 75143

Declare the following equipment conforms to the standard(s) as listed:

Model: EXPCMR Series
Description: Explosion Proof Camera

Evaluated Listings:

CE: DIRECTIVE 2014/35/EU - LOW VOLTAGE DIRECTIVE
CE: DIRECTIVE 2014/30/EU - EMC DIRECTIVE
CE: Regulation (EC) No 1907/2006 - REACH REGULATION
CE: DIRECTIVE 2015/863/EU - ROHS DIRECTIVE

The EXPCMR series complies with the essential protection requirements of the European Parliament of the Council Directive for Low Voltage Directive, EMC Directive, REACH Regulation, and RoHS Directive. This certification applies to all specimens manufactured in accordance to the manufacture's drawings.

Signed for and on behalf of: Larson Electronics, LLC
Place of issue: Kemp, TX

Signature: James Thomas

Name: James Thomas
Position: Operations Manager

Certification

Manufacturer: Larson Electronics LLC
Address: 9419 US-HWY 175
Kemp, Texas 75143

Declare the following equipment conforms to the standard(s) as listed:

Model: EXPCMR Series
Description: Explosion Proof Camera

Evaluated Listings:

CE: Regulation (EC) No 1907/2006 - REACH REGULATION
CE: DIRECTIVE 2015/863/EU - ROHS DIRECTIVE

This is to certify that products offered by Larson Electronics LLC comply with the Reduction of Hazardous Substances (RoHS) directives. Directive 2002/95/EC became effective on 1 July 2006. It restricts the use of six substances in the manufacture of electrical and electronic equipment. This directive was revised in June 2011 and is now referred to as directive 2011/65/EU. Directive 2015/863/EU amending Annex II to Directive 2011/65/EU announced plans to add four substances from 22 July 2019.

We hereby certify that the equipment specified above conforms to the Directive(s) by containing less of the restricted substances than the stated limits.

Signed for and on behalf of: Larson Electronics, LLC
Place of issue: Kemp, TX

Signature: James Thomas

Name: James Thomas
Position: Operations Manager

Certification

Manufacturer: Larson Electronics LLC
Address: 9419 US-HWY 175
Kemp, Texas 75143

Declare the following equipment conforms to the standard(s) as listed:

Model: EXPCMR Series
Description: Explosion Proof Camera

Evaluated Listings:

CE: Regulation (EC) No 1907/2006 - REACH REGULATION

This letter establishes the opinion of Larson Electronics LLC regarding the status, under the current European Union ("EU") Regulations on Registration, Evaluation, Authorization, and Restriction of Chemical Substances ("REACH").

REACH does not apply to manufactured products which are referred to as "completed articles". Substances (chemicals) are subject to REACH registration, NOT products.

In addition, Articles are exempt from the REACH requirements if (a) the Article does not contain a substance of very high concern or candidate substance in an amount exceeding 0.1% weight by weight, and (b) if substances present in the Article in excess of 1 ton per year per importer are not expected nor intended to be released.

Based on communication with our raw material suppliers, we conclude that to the best of our knowledge our products requiring REACH compliance do not contain any of the currently listed SVHC in concentrations of 0.1% or above.

Accordingly, we foresee no registration or pre-registration requirement for the products we supply.

Signed for and on behalf of: Larson Electronics, LLC
Place of issue: Kemp, TX

Signature: James Thomas

Name: James Thomas
Position: Operations Manager

Frequently Asked Questions (FAQ)