Larson Electronics LLC
9419 E US HWY 175, Kemp, TX 75143
Phone: 800.369.6671

www.LarsonElectronics.com
Email: sales@LarsonElectronics.com
Fax: 903.765.7664

MT-BBT-220V-230V-41.67A

1-Phase Buck/Boost Step-Up Transformer - 220V Primary - 230V Secondary - 41.67 Amps - 50/60Hz

Product ID: 265224

Image: MT-BBT-220V-230V-41.67A

Larson Electronics LLC manufactures a wide variety of products, including custom built to spec designs. The pictures displayed for this unit are a general representation of form factor for the product line and may not accurately represent this exact configuration in every detail due to custom builds and changes between similar products in our standard catalog. The specifics for this configuration are listed in the specification table and supporting documentation (CAD files, Dimensional Drawing, Name Plate Diagram, Wiring Diagram, etc.). This means that specific details (receptacles, plugs, wires, connections, mounting brackets, external finishes, etc.) may not be accurately represented in images vs specifications. Please review specifications and do not order based solely on images.

MT-BBT-220V-230V-41.67A Buck and Boost Step-Up Transformer

Transformer Type: Buck/Boost Step-Up Autotransformer
Phase: Single Phase
Frequency: 50/60 Hz
Input Voltage: 220 V
Primary Amps: 43.75 A @ 220 V
Primary Configuration: Two Winding
kVA: 9.63
Output Voltage: 230 V
Secondary Amps: 41.67 A @ 230 V
Voltage Difference: 95%
Winding Material: Aluminum
Knockouts: Side and Rear
Primary Termination: Front Access Copper Tabs or Lead Wires
Secondary Termination: Front Access Copper Tabs or Lead Wires
Cooling: Air / Dry Type
Insulation: 180°C
Temperature Rise: 115°C
Sound Level: 36 dB
Enclosure Rating: NEMA 3R
Encapsulation: Silica Sand & Resin Compounds
Enclosure Material: Steel
Finish: ANSI 61 Grey Finish
Mounting: Wall Mount Via Mounting Tabs
Dimensions: 3.98"D x 4.37"W x 7.74"H
Weight: 15 lb

Ratings

NRTL Listed for United States and Canada
NEMA 3R Indoor/Outdoor Enclosure
Meets or Exceeds NEMA ST-20 Standards
Buck and Boost Step-Up Transformer

Special Orders - Special Requirements

Contact us for special requirements
Toll Free: 1-800-369-6671
Intl: 1-903-270-1187
E-mail: sales@larsonelectronics.com

The MT-BBT-220V-230V-41.67A Single Phase Step-Up Buck and Boost Transformer from Larson Electronics is powerful, reliable, and designed with the environment in mind. Suitable for both indoor and outdoor applications, the MT-BBT-220V-230V-41.67A provides increased reliability, higher efficiency, protection against critical equipment failures and an extra level of protection by isolating the power source from the connected device. The lower operating costs, lower heat emissions and lower cost of ownership make this transformer ideal for a wide range of applications and businesses.

PLEASE NOTE: ANY FREE SHIPPING OFFERS DO NOT APPLY TO POWER DISTRIBUTION PANELS, TRANSFORMERS, OR SUBSTATIONS

Transformer Features: The MT-BBT-220V-230V-41.67A buck and boost transformer is a single phase unit with a 9.63 kVA rating and a primary voltage of 220 V using a maximum of 43.75 amps on the primary side. This step-up transformer has a secondary voltage of 230 V and provides up to 41.67 amps available on the secondary side. Featuring robust construction, this unit`s cores are manufactured with non-aging, cold-rolled silicon steel laminations using state of the art technology.

This unit boasts a low cost of ownership and is highly energy efficient. Lower heat emissions mean less cooling is needed as well. The NEMA 3R painted steel enclosure makes the unit suitable for both indoor and outdoor applications, and this step-up transformer can be wall mounted. The MT-BBT-220V-230V-41.67A features a 180°C insulation with a 115°C temperature rise.

Construction: The aluminum winding in the MT-BBT-220V-230V-41.67A are formed from high quality aluminum wire help to improve performance. The close tolerances used during manufacturing also eliminates burrs which hinder performance. Each core is specially coated to prevent the ingress of moisture and are electrically balanced to minimize axial forces during short circuit situations. Buck and boost transformers are designed to maximize the performance and life of electrical equipment. The MT-BBT-220V-230V-41.67A is encapsulated in silica sand and resin, and cased in a NEMA 3R steel enclosure. NEMA 4, NEMA 4X, and NEMA 12 enclosures are available upon request.

Click Image to Enlarge

Benefits: The MT-BBT-220V-230V-41.67A buck/boost step-up transformer offers many benefits to the consumer. Buck/boost transformers pass the majority of the load voltage directly through the transformer, only transforming a small percentage of the load. Due to this technology, a smaller and quieter step-up transformer is manufactured and uses less materials. This provides owners with significant energy savings as well as offering

environmental benefits.

Higher efficiency not only extends the life of the transformer, but also turn into cost savings for owners in the form of lower energy bills and decreased cost of ownership. Installation and maintenance costs are reduced due to the smaller form factor, and less overall space requirements are decreased. In addition, these step-up transformers operate quieter than a standard autotransformer of the same capacity.

Mounting: Integrated wall mounting brackets make installation fast and easy. Because of the smaller overall footprint, heavy machinery is rarely needed for mounting and installation.

Installation: Installation is simple. Connect the primary leads and secondary leads to the step-up transformer per the provided wiring diagram. Knockout hubs on either side and the bottom of the transformer allow for easy line-in and line-out wiring. The front access cover provides convenient.

Applications: Air conditioners, lighting systems, heating elements, motor applications and other applications that that require the ability to power loads that differ from the available line voltage.

Limitations: While there are many benefits to a buck/boost transformer, there are some limitations to consider. This transformer will only transformer voltage, it will not convert phases, it will not create even legs between line 1 and line 2 (L1 and L2 WILL be UNEVEN), has no circuit isolation, and does not create a neutral for applications where a neutral is not already present. If any of these limitations apply to you, you will need a standard transformer. Please see below link for our standard line of industrial transformers or our line of phase converters.

Note on Voltage Generation: Buck/boost transformers, like this unit, do NOT generate even legs of voltage on the secondary side. The generate voltage legs will always be unbalanced. This is acceptable for some situations, but other situations call for even legs on the secondary side. This simply cannot be achieved with a buck/boost transformer.

If your specific situation requires even legs of voltage on the secondary side, you will have to consider either a split phase buck/boost transformer or a standard industrial transformer. Larson Electronics has a wide range of both available for purchase:

Split Phase Buck/Boost Transformers

Standard Industrial Transformers

Note on Phases: This buck/boost transformer is a single phase step-up transformer. For three phase transformers, click on the following links:

Three Phase Delta Buck/Boost Transformers

Three Phase Wye Buck/Boost Transformers

Larson Electronics is a manufacturer and as such can build stationary and portable transformer systems to your specifications. Although we carry several models of power

distribution transformer systems, we can deliver custom ordered units almost as quickly as our prebuilt units. If this model does not meet your needs, please contact us at 1-800-369-6671 or sales@larsonelectronics.com to discuss your specific requirements.

SINGLE PHASE BUCK & BOOST TRANSFORMERS INSTRUCTION MANUAL

This manual applies to all single-phase buck & boost transformers sold by Larson Electronics. ***Please refer to the connection diagram on pages 4-6 for properly connecting the transformer.***

Warning: Do not attempt installation until you are familiar with all warnings, precautions, and procedures outlined within this instruction sheet. We strongly encourage only a licensed electrician install, operate and maintain this product.

Precautions:

- Do not handle this transformer without proper equipment and experienced personnel.
- Fully inspect the transformer before installation.
- Use appropriate electrical terminals with flexible connectors.
- Connections should be in accordance with nameplate drawings or attached wiring diagrams.
- Disconnect all live power before installing and maintaining the transformer.
- Do not change any connections while the transformer is energized.
- Secure all ground connections before energizing the transformer.

After receiving the transformer, immediately inspect each unit for damage that could have resulted from transit. Check to ensure the specs on the transformer match the shipping documents. A claim should be filed with the carrier if any shipping damage is noted. These details with all relevant information should also be forwarded to Larson Electronics.

Use appropriate measures and experienced personnel for transporting the transformer relative to its size. Never attempt to lift the transformer without proper equipment. Lifting tabs are included on larger transformers to help ease transportation.

All MT-BBT Buck-Boost transformers are NEMA 3R rated, suitable for both indoor and outdoor installations. Follow appropriate electrical codes for cable installation and use suitable hardware for outdoor installations, such as water tight couplings at each knockout.

The transformer must be installed in an upright position on surfaces capable of supporting its weight. If installed outdoors, orient the unit vertically with the wiring compartment down to prevent the ingress of moisture.

Mounting the Transformer (refer to page 7)

1. Choose a non-combustible surface for installing the transformer. This location must allow air flow around the transformer for cooling purposes.
2. Pre-drill the top two mounting holes on your mounting surface. (refer to mounting table on page 7)
3. With assistance, lift the transformer over the pre-drilled mounting holes and install the top two mounting bolts. Use appropriate equipment and lifting tabs for large transformers.
4. Level the unit and find the lower mounting hole(s) within the wiring compartment.
5. Drill out and install the lower mounting bolt(s) into the mounting surface.
6. In order to provide NEMA 3R protection, the unit must be mounted vertically with the mounting tabs facing up.

Ventilation

Transformers are required to maintain free air flow around the unit for cooling purposes. The location should maintain an average ambient temperature of 86°F (30°C) and should not exceed 104°F (40°C) at any time. Proper ventilation is essential for transformers to meet their kVA capability. General purpose transformers should be located at least 2 inches for 10kVA and 4 inches for units over 10kVA from the surface to maintain adequate air circulation.

Accessibility

Due to NEC standards, it is required for transformers to be accessible for inspection and located accordingly. Exposed passage ways where people could be exposed to live parts during inspection should be avoided.

Sound Levels

By nature, transformers emit sound frequencies due to their electrically energized components. Care should be exercised when selecting a location to avoid sensitive areas such as in schools, hospitals, and office facilities. The sound levels produced by these transformers are required to meet NEMA standards. The sound level can vary from 40 to 60 DB. Acoustically absorbing materials could be considered for surrounding walls and ceilings.

Wire Connections

1. Loosen the cover screw on the front to open the wiring compartment.
2. Ensure terminals are clean. Use the included lugs and bolts for terminal wiring where applicable. Use wire nuts or similar for all other electrical connections.
3. Make the required electrical connections per the wire diagram on pages 4-6. This includes input and output connections, as well as ground(s).
4. If any unused wire leads remain, insulate with a wire nut and electrical tape.
5. Inspect all connections and close the wiring compartment. Secure the cover screw.

Proper cable size is selected based on the line current rating of the transformers primary and secondary sides. Pre-punched knockouts are provided to help facilitate cable entry.

Ground

Grounding should be done in accordance with national electrical code standards. Securely grounding the transformer should be done as a safety precaution.

For safe and proper operation of the transformer, we recommend the following items be checked for completeness:

- ☐ Insulation resistance: enclosure to primary, enclosure to secondary and primary to secondary should be greater than 10k ohms.
- ☐ Output voltage: measure and verify that the transformer outputs the correct voltage in accordance with nameplate specifications. Voltage may vary depending on actual power available at your facility.
- ☐ Phase connections: refer to the nameplate diagram to ensure correct phase connections.
- ☐ When windings are connected in parallel (in the case of dual voltage primaries), the primary taps for all coils must be connected to the identical percentage tap positions to avoid the shorting of turns. For tap positions, refer to the transformer nameplate.

- ☐ Grounding: check to ensure the enclosure is grounded with the appropriately sized conductor.
- ☐ Connections: check all electrical connections for proper clearance and tightness.
- ☐ Care must be taken to ensure the neutral current does not exceed ½ of the transformers kVA rating for single phase, 3-wire 240/120 volt loads.

Operation

For relatively normal clean installations, MT-BBT transformers will operate satisfactory under normal loads. Fully loaded transformers may be warm to the touch. Normal loading standards permit the enclosure to be 149°F (65°C) over ambient temperatures. MT-BBT transformers are designed to operate continuously at their full kVA rating.

ANSI C57.96 provides guidance for loading transformers under different conditions including:

- ➔ Varying ambient temperatures that are different from the ambient temperatures required for transformer operation.
- ➔ Short time overload as it relates to time and temperature and the corresponding loss of life of the transformer.
- ➔ Overload that results in the reduction of transformer life expectancy.

If the transformer is experiencing increased temperatures, the following load characteristics should be considered immediately:

- ➔ Rigorous motor starting loads or other impact type loading for which a specific transformer for that application is required.
- ➔ Over-excitation of the unit due to excess supply line voltage or current.
- ➔ Ambient temperatures above standard.
- ➔ Overload beyond ANSI C57.96 guidelines.
- ➔ Harmonic distortions of the supply line voltage and currents.

Maintenance:

Under normal operating conditions, MT-BBT transformers do not require maintenance. However, periodic care and inspection is good practice, particularly in extreme environmental conditions.

External inspection and removal of dust and dirt may be carried out while the transformer is in operation. However, access covers must not be open while energized.

The accumulation of dust and dirt will affect cooling of the transformer causing a potential fire hazard. Ice or snow will not adversely affect the operation of the transformer.

Warning: Do not perform internal maintenance without first de-energizing the transformer! The transformer must be isolated and the terminals grounded. Check all ground connections to ensure a low impedance connection.

Connection Diagram (Refer to the diagrams below for connecting the transformer. Choose the type that resembles your transformer.)

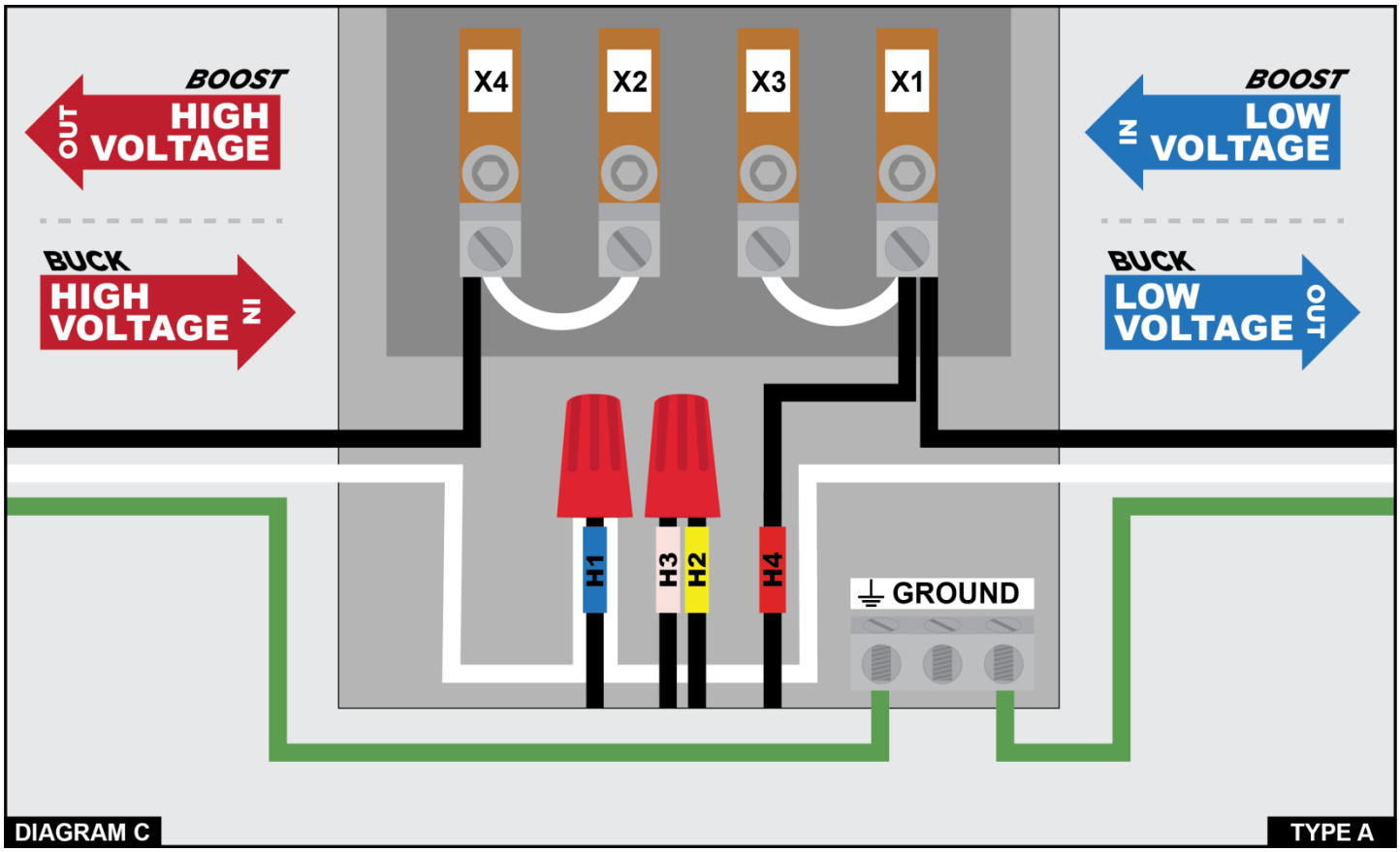

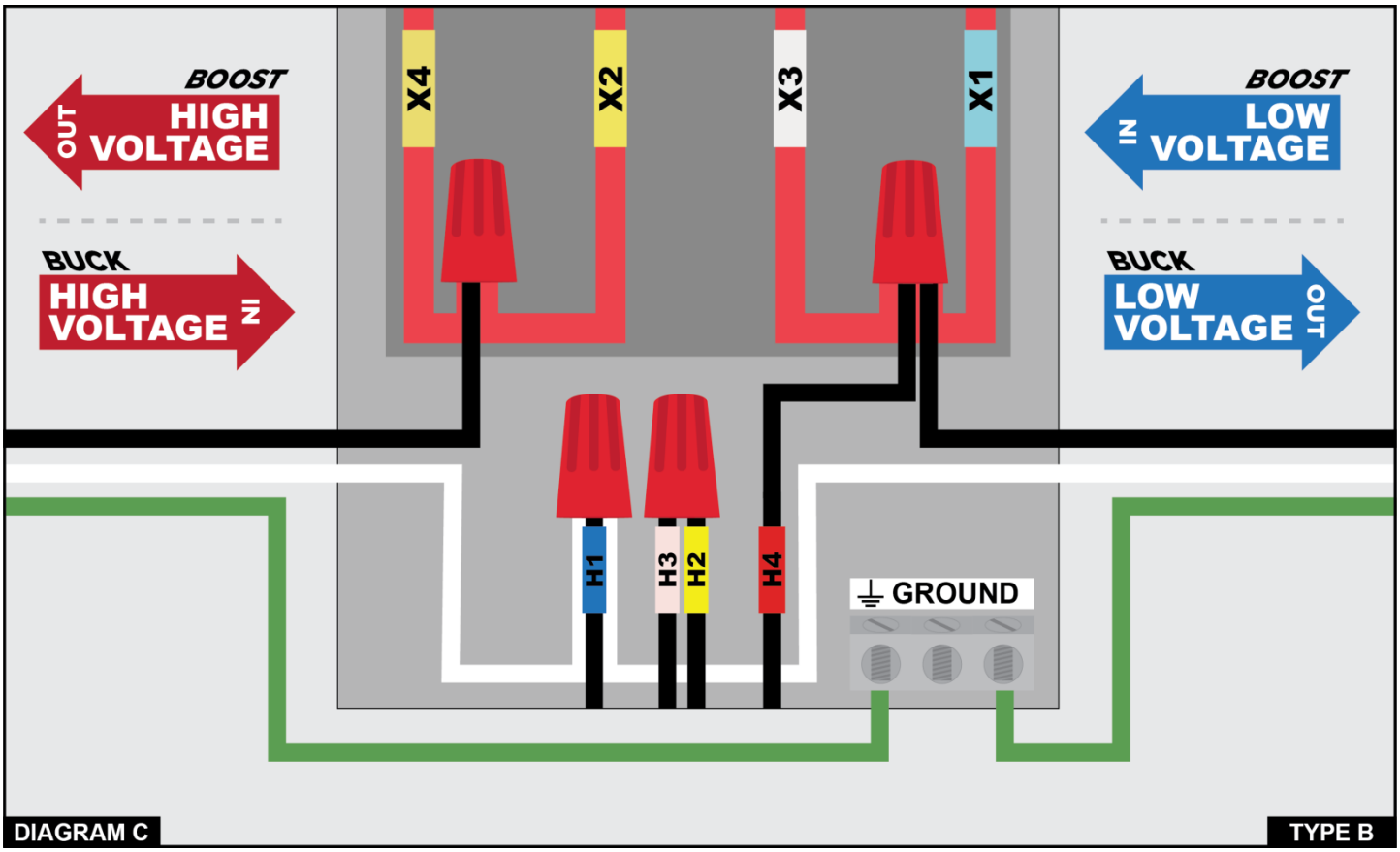

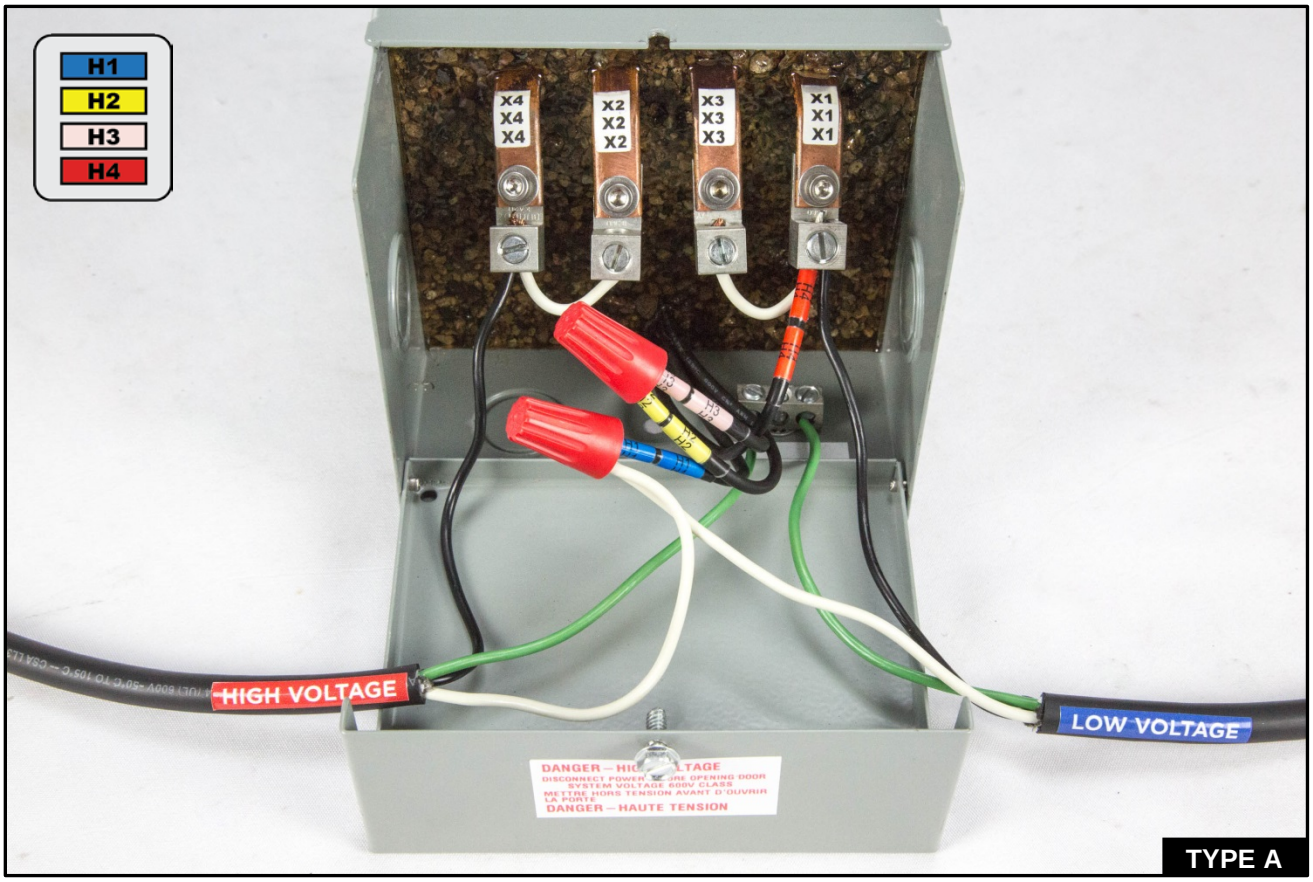
H1
H2
H3
H4
X4 X4 X4
X2 X2 X2
X3 X3 X3
X1 X1 X1
HIGH VOLTAGE
LOW VOLTAGE
DANGER – HAUTE TENSION

TYPE A

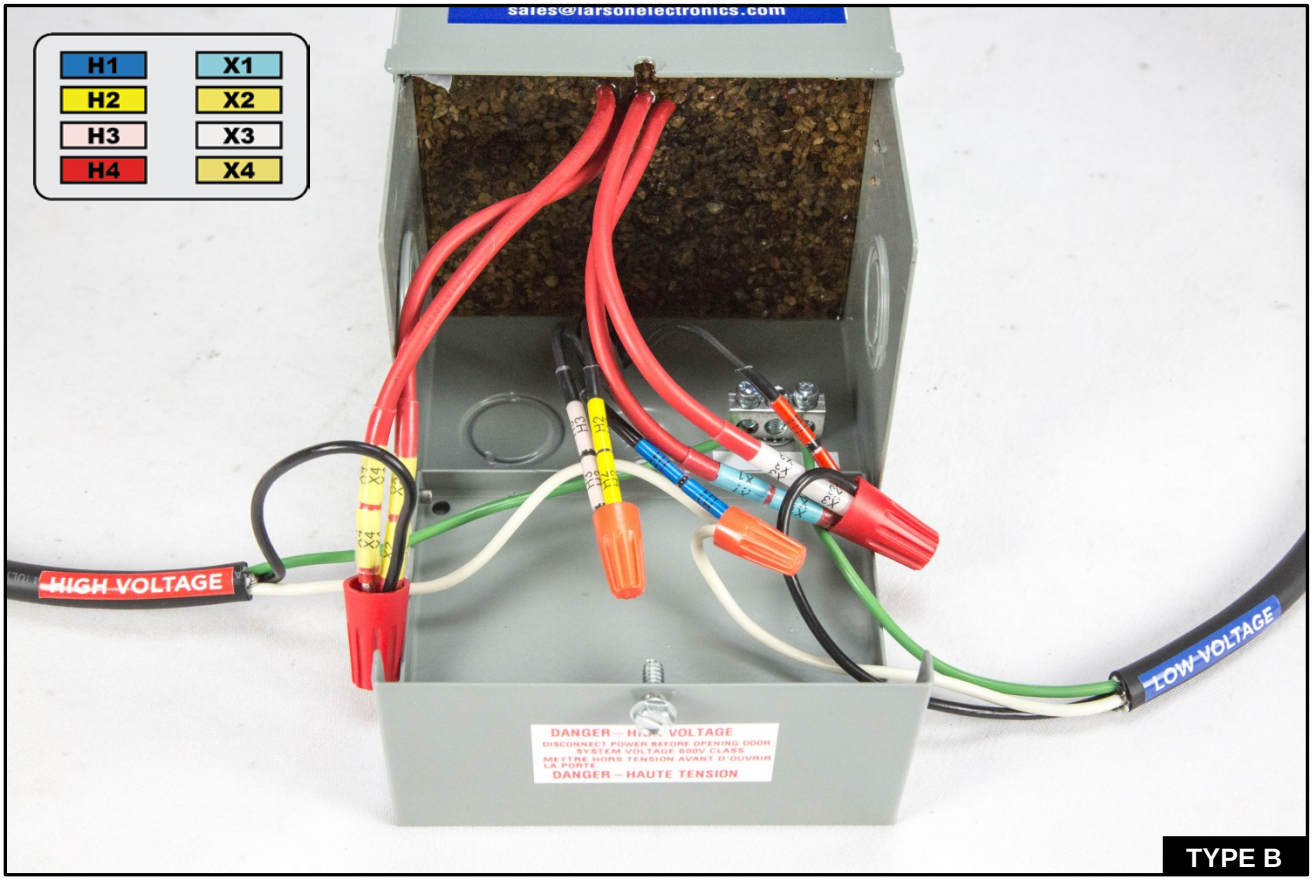
sales@larsonelectronics.com
H1
H2
H3
H4
X1
X2
X3
X4
HIGH VOLTAGE
LOW VOLTAGE
DANGER – HAUTE TENSION

TYPE B

Wiring Diagram

WARNING: *DO NOT SERVICE WHILE ENERGIZED!* ***Tip: Use a voltmeter to check voltage!***

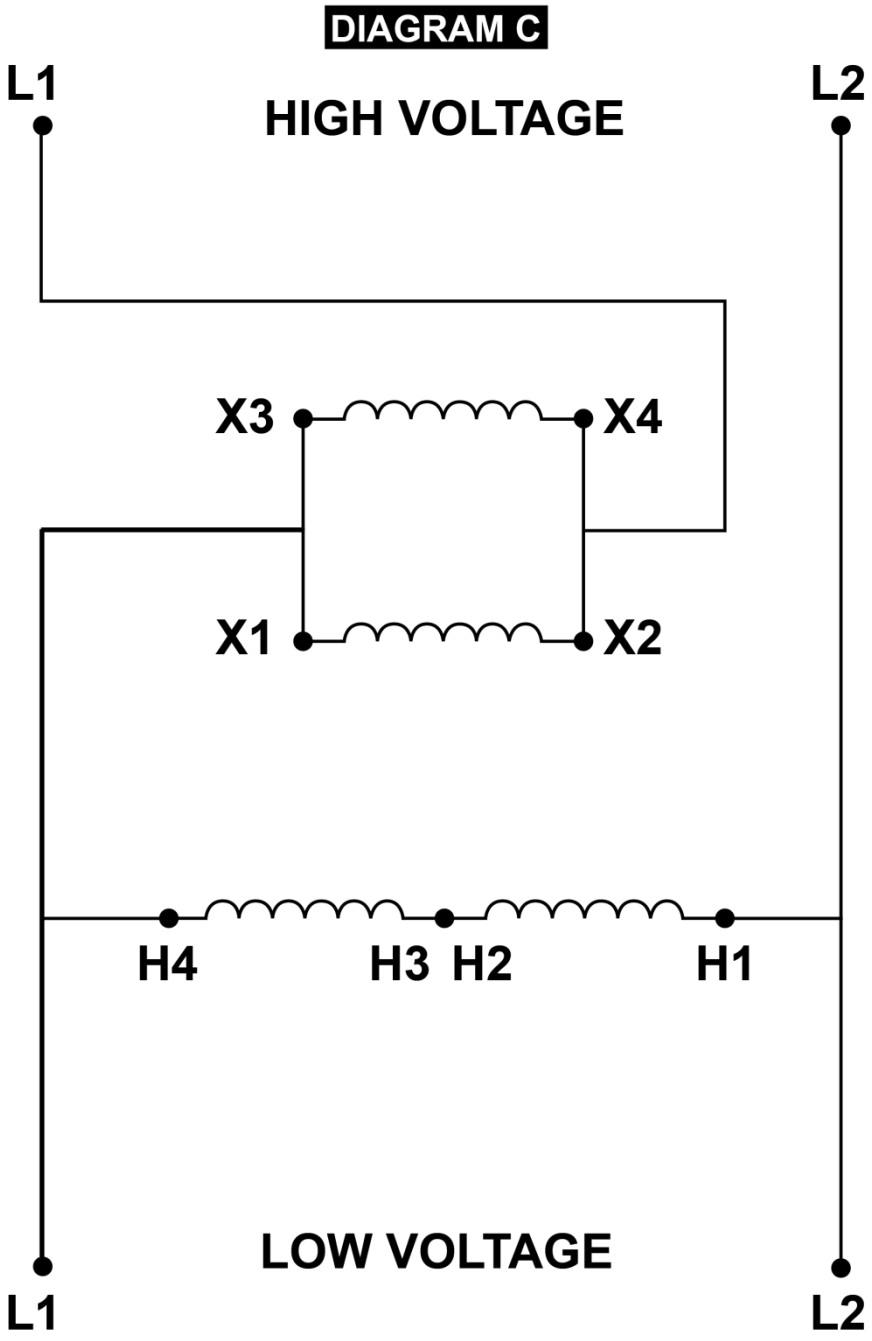

Connection Guide:

1. Connect **X4** and **X2** together
2. Connect **X3** and **X1** together
3. Connect High Voltage **L1** to **X4, X2**
4. Connect Low Voltage **L1** to **X1, X3, H4**
5. Connect **H3** and **H2** together
6. Connect High & Low Voltage **L2** to **H1**

STANDARD MODELS:

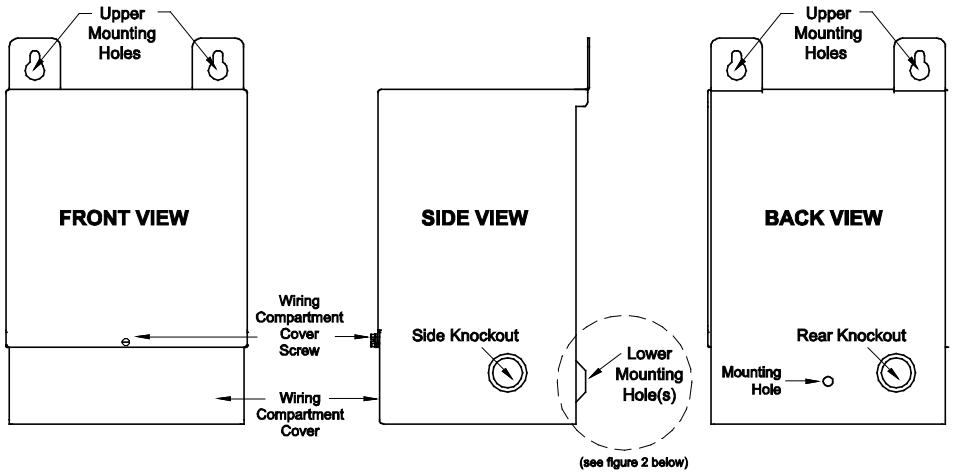

MODELS WITH LIFTING TABS:

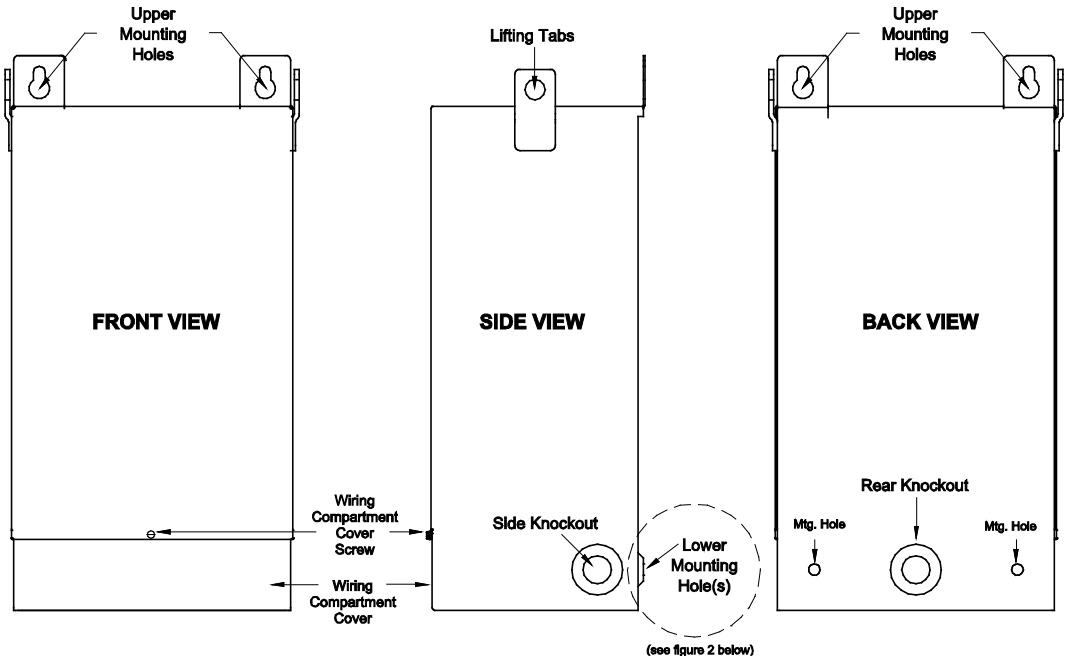

FIGURE 2: Lower wiring compartment mounting hole(s), mounting hardware installation assembly diagram.

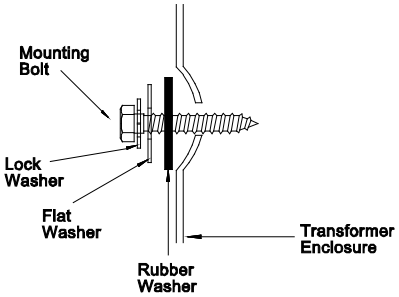

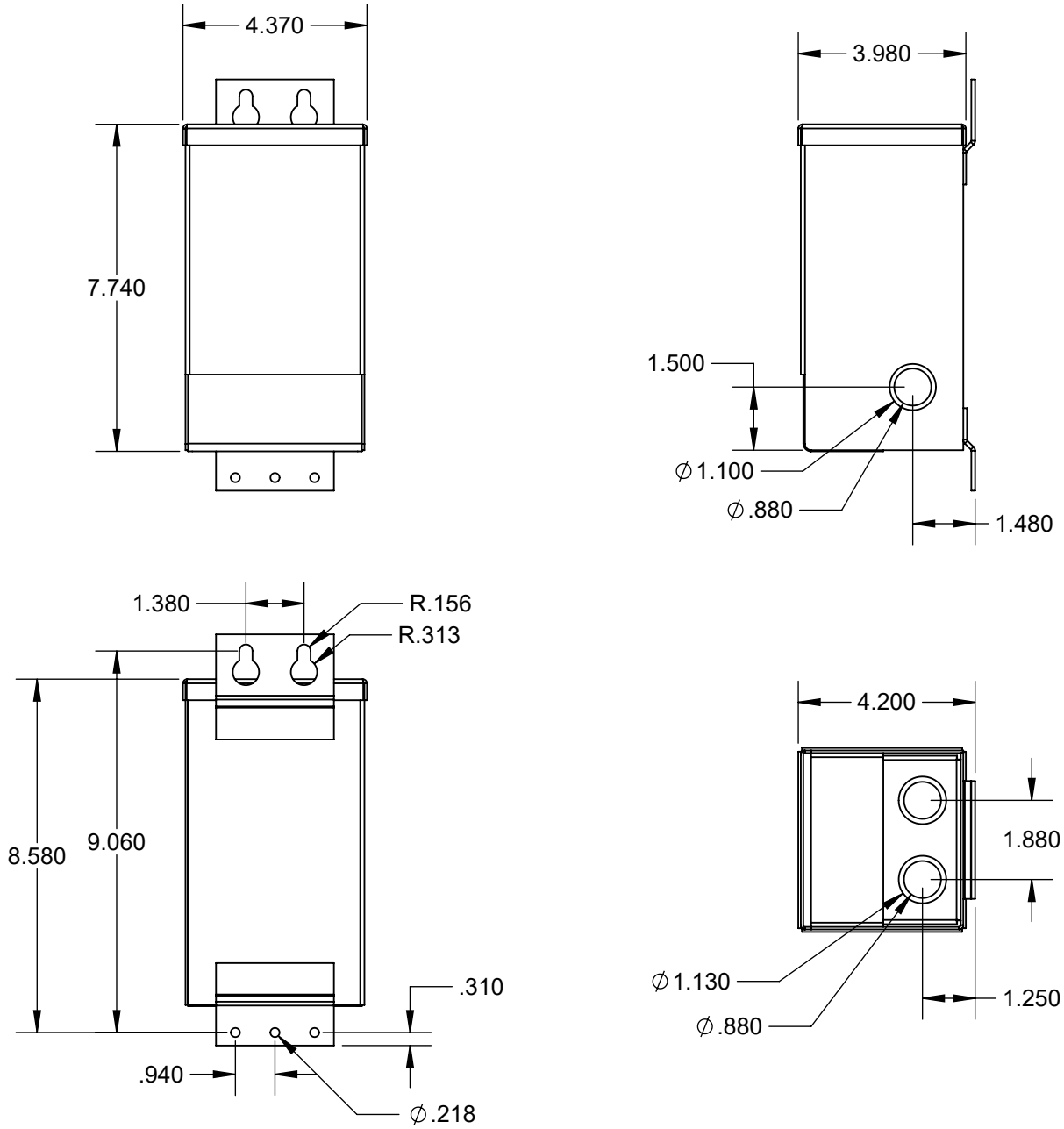

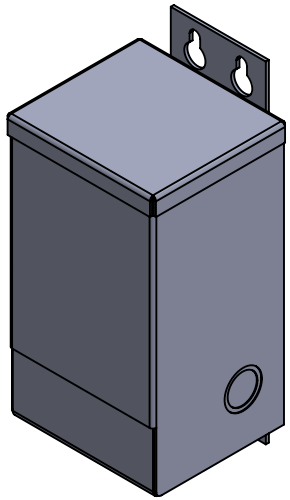

LARSON ELECTRONICS®

PART NUMBER:

MT-BBT-220V-230V-41.67A

SIZE		REV
A		1

DIMENSIONS ARE IN INCHES				
DO NOT SCALE DRAWING	DATE	5/15/2026	SCALE: NTS	SHEET 1 OF 1

PROPRIETARY AND CONFIDENTIAL

THE INFORMATION CONTAINED IN THIS DRAWING IS THE SOLE PROPERTY OF LARSON ELECTRONICS LLC. ANY REPRODUCTION IN PART OR AS A WHOLE WITHOUT THE WRITTEN PERMISSION OF LARSON ELECTRONICS LLC IS PROHIBITED.

Larson Electronics LLC
9419 E US HWY 175, Kemp, TX 75143
Phone: 800.369.6671

www.LarsonElectronics.com
Email: sales@LarsonElectronics.com
Fax: 903.765.7664

Larson Electronics LLC
9419 E US HWY 175, Kemp, TX 75143
Phone: 800.369.6671

www.LarsonElectronics.com
Email: sales@LarsonElectronics.com
Fax: 903.765.7664

Larson Electronics LLC
9419 E US HWY 175, Kemp, TX 75143
Phone: 800.369.6671

www.LarsonElectronics.com
Email: sales@LarsonElectronics.com
Fax: 903.765.7664

Larson Electronics LLC
9419 E US HWY 175, Kemp, TX 75143
Phone: 800.369.6671

www.LarsonElectronics.com
Email: sales@LarsonElectronics.com
Fax: 903.765.7664

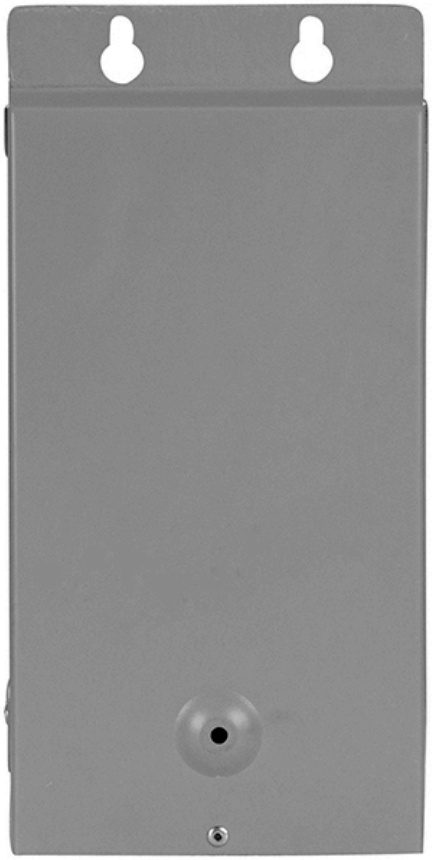

Certification

Manufacturer: Larson Electronics LLC
Address: 9419 US-HWY 175
Kemp, Texas 75143

Declare the following equipment conforms to the standard(s) as listed:

Model: MT-BBT Series
Description: Buck/Boost Transformers

The MT-BBT series of buck/boost transformers are comprised of a NEC (National Electrical Code, United States) and CEC (Canadian Electrical Code, Canada) Listed transformers from various manufacturers, including Amce Electric, Control Transformer Inc., Dogan Electric MFG CO., Eaglerise Electric & Electronics Co LTD, Federal Pacific, Hammond MFG Co LTD, and Jefferson Electric Inc. These transformers are manufactured to Larson Electronics LLC specifications including specified windings, winding materials, taps, mounting, and housing designs. Larson Electronics LLC MT-BBT series may include customized mounting external accessories, prewired transformers, and cord caps. This assembly is built to NEC and CEC standards.

Signed for and on behalf of: Larson Electronics, LLC
Place of issue: Kemp, TX

Signature: James Thomas

Name: James Thomas
Position: Operations Manager

Material Safety Data Sheet

To Whom It May Concern,

Larson Electronics LLC MT Series industrial line of transformers are considered "ARTICLES" under 29 CFR 1910-1200, the OSHA Hazard Communication Standard, and do not require a Material Safety Data Sheet (MSDS).

Articles are specifically exempt from the regulations of this standard. OSHA defines an article as follows:

1910-1200(c) – Article means a manufactured item other than a fluid or particle:

i. Which is formed to a specific shape or design during manufacture;
ii. Which has end use function(s) dependent in whole or in part upon its shape or design during end use; and
iii. Which under normal conditions does not release more than very small quantities.

Regards,

Ray Smith

Ray Smith
Larson Electronics, LLC.

LARSON ELECTRONICS LLC • 9419 E US HWY 175 • KEMP, TX 75143
p: 1-800-369-6671 • intl: 903-498-3363 • f: 903-498-3364 • sales@larsonelectronics.com

UL Product iQ™

XPTQ.E79947 - Transformers, General Purpose

Transformers, General Purpose

See General Information for Transformers, General Purpose

ACME ELECTRIC, A DIVISION OF HUBBELL INCORPORATED (DELAWARE) E79947
N56 W13385 Silver Spring Dr
Menomonee Falls, WI 53051 USA

Trademark and/or Tradename: Acme Electric®

Air cooled reactors, Model(s) Series LWE with prefixes

General purpose transformers, "Series or style SE", Model(s) 47564, 47565

General purpose transformers, "Series or style SE or SR", Model(s) TLVS, TS

General purpose transformers, indoor or protected cover use, "SE", Model(s) Series or style SE

General purpose transformers, indoor or protected cover use, Model(s) Series or style SE

General purpose transformers, indoor use only, Model(s) Series or style EB, T-60620

General purpose transformers, indoor, protected cover or outdoor use, "SR", Model(s) Series or style SR

General purpose transformers, indoor, protected cover or outdoor use, Model(s) Series or style ER, Series or style SR

Industrial control transformers, Model(s) AE, CE, FS, TA, TB

Last Updated on 2019-05-08

The appearance of a company's name or product in this database does not in itself assure that products so identified have been manufactured under UL's Follow-Up Service. Only those products bearing the UL Mark should be considered to be Certified and covered under UL's Follow-Up Service. Always look for the Mark on the product.

UL permits the reproduction of the material contained in the Online Certification Directory subject to the following conditions: 1. The Guide Information, Assemblies, Constructions, Designs, Systems, and/or Certifications (files) must be presented in their entirety and in a non-misleading manner, without any manipulation of the data (or drawings). 2. The statement "Reprinted from the Online Certifications Directory with permission from UL" must appear adjacent to the extracted material. In addition, the reprinted material must include a copyright notice in the following format: "© 2020 UL LLC"

UL Product iQ™

XPTQ.E506261 - Transformers, General Purpose

Transformers, General Purpose

See General Information for Transformers, General Purpose

CONTROL TRANSFORMER INC E506261
3701 Warren Meadville Rd
Cortland, OH 44410-9464 USA

Model(s) PWR-2637

Last Updated on 2019-03-05

The appearance of a company's name or product in this database does not in itself assure that products so identified have been manufactured under UL's Follow-Up Service. Only those products bearing the UL Mark should be considered to be Certified and covered under UL's Follow-Up Service. Always look for the Mark on the product.

UL permits the reproduction of the material contained in the Online Certification Directory subject to the following conditions: 1. The Guide Information, Assemblies, Constructions, Designs, Systems, and/or Certifications (files) must be presented in their entirety and in a non-misleading manner, without any manipulation of the data (or drawings). 2. The statement "Reprinted from the Online Certifications Directory with permission from UL" must appear adjacent to the extracted material. In addition, the reprinted material must include a copyright notice in the following format: "© 2020 UL LLC"

UL Product iQ™

XQNX.E495103 - Power and General-purpose Transformers, Dry Type

Power and General-purpose Transformers, Dry Type

See General Information for Power and General-purpose Transformers, Dry Type

CONTROL TRANSFORMER INC E495103
3701 Warren Meadville Rd
Cortland, OH 44410-9464 USA

Dry Type Ventilated Autotransformer, E12884.

Last Updated on 2017-09-14

The appearance of a company's name or product in this database does not in itself assure that products so identified have been manufactured under UL's Follow-Up Service. Only those products bearing the UL Mark should be considered to be Certified and covered under UL's Follow-Up Service. Always look for the Mark on the product.

UL permits the reproduction of the material contained in the Online Certification Directory subject to the following conditions: 1. The Guide Information, Assemblies, Constructions, Designs, Systems, and/or Certifications (files) must be presented in their entirety and in a non-misleading manner, without any manipulation of the data (or drawings). 2. The statement "Reprinted from the Online Certifications Directory with permission from UL" must appear adjacent to the extracted material. In addition, the reprinted material must include a copyright notice in the following format: "© 2020 UL LLC"

UL Product iQ™

XPTQ.E3210 - Transformers, General Purpose

Transformers, General Purpose

See General Information for Transformers, General Purpose

DONGAN ELECTRIC MFG CO E3210
34760 Garfield Rd
Fraser, MI 48026 USA

Dry type, auto transformers, Model(s) 415 Series With additional nomenclature to define specific features as allowed by UL file.

Dry type, auto transformers, Model(s) 515 Series With additional nomenclature to define specific features as allowed by UL file.

General purpose autotransformers, Model(s) 34 Series@

General purpose transformers, "Series 75", Model(s) ESA-XXXXX.XXX and R

General purpose transformers, "Series 75", Model(s) Series 75 followed by suffix numbers to indicate ratings

General purpose transformers, "Series 75", Model(s) Series CI3 followed by suffix numbers to indicate ratings

General purpose transformers, "Series 75", Model(s) Series PI3 followed by suffix numbers to indicate ratings

General purpose transformers, "Series 75", Model(s) Series WI3 followed by suffix numbers to indicate ratings

General purpose transformers, Model(s) NSC-XX-TY-Y1Y2

General purpose transformers rated 10 KVA or less, Model(s) 413 Series With additional nomenclature to define specific features as allowed by UL file.

General purpose transformers rated 10 KVA or less, Model(s) 416 Series With additional nomenclature to define specific features as allowed by UL file.

General purpose transformers rated 10 KVA or less, Model(s) 513 Series With additional nomenclature to define specific features as allowed by UL file.

General purpose transformers rated 10 KVA or less, Model(s) 516 Series With additional nomenclature to define specific features as allowed by UL file.

General purpose transformers, indoor use only, Model(s) 35 Series@, 80 and 95 Series@

Industrial control transformers, Model(s) 50-0025-XXX thru 50-5000-XXX

Industrial control transformers, Model(s) 53 , with 05, 07, 10, 15, 20, 25, 30, 35, 37, 50, 75, 100, 150, 200, 300 or 500.

Industrial control transformers, Model(s) 53A , with 05, 07, 10, 15, 20, 25, 30, 35, 37, 50, 75, 100, 150, 200, 300 or 500.

Industrial control transformers, Model(s) 54 , with 05, 07, 10, 15, 20, 25, 30, 35, 37, 50, 75, 100, 150, 200, 300 or 500.

Industrial control transformers, Model(s) 56 , with 05, 07, 10, 15, 20, 25, 30, 35, 37, 50, 75, 100, 150, 200, 300 or 500.

Industrial control transformers, Model(s) 56A , with 05, 07, 10, 15, 20, 25, 30, 35, 37, 50, 75, 100, 150, 200, 300 or 500.

Industrial control transformers, Model(s) AC or HC , followed by four digits, followed by 1, 2, 3, 4 or 6, followed by 1, 2, 3, 4, 5, 6, 7, 8 or 9, with or without SH.

Industrial control transformers, Model(s) AC-XXXX Y1Y2, BC-XXXX-Y1Y2, ES-XXXXX-XXX, IC-0010-XXX-YYYY thru IC-1000-XXX-YYYY

Industrial control transformers, Model(s) NSC , followed by 21 thru 35, followed by A, B, or H, followed by 1, 2, 4 or 6, followed by four digits.

Industrial control transformers, Model(s) Y1Y2

Insulating transformers, indoor use only, "35 Series", Model(s) 35-05

Insulating transformers, indoor use only, "35 Series", Model(s) 35-05, 35-10, 35-15, 35-20, 35-25, 35-35, 35-50 or 35-75, followed by -3, -9, -16, -18, -58, -126, -132, -250, -303, -309, -342, -419, -FB6, -KSPEC, -LM, -LY, -M, -S or -Y.

Insulating transformers, indoor use only, "35 Series", Model(s) 35-10, 35-15, 35-25, 35-50, 35-75, 35-XXXX+

Insulating transformers, indoor use only, Model(s) 1345, 1452, 2481, 33 Series@, 36-05 , followed by A, C, KA, KC, KN, KS, N, S., 36-10 , followed by A, C, KA, KC, KN, KS, N, S., 36-100 , followed by A, C, KA, KC, KN, KS, N, S., 36-100-7, 36-25 , followed by A, C, KA, KC, KN, KS, N, S., 36-25-7, 36-50 , followed by A, C, KA, KC, KN, KS, N, S., 36-50-7, 36-75 , followed by A, C, KA, KC, KN, KS, N, S., 5646-47, PCA

Isolation power transformers for indoor or outdoor use, Model(s) 161-10*, 161-7*, 163-3*, 163-6*, 163-9*, 180-100*, 180-150*, 180-200*, 180-300*, 180-50*, 180-500*, 180-75*, 35-05, 35-10, 35-15, 35-25, 35-50, 35-75, 35-XXXX+, 45-XXXX, 712XX-XXXX, 80-XXXX+, 85-XXXX, AP-XXXX, ES-XXXXX-XXX, FP-XXXX

Isolation power transformers for indoor or outdoor use, max rated 10 KVA, Model(s) 61-XXXX+, 63-XXXX+

Isolation power transformers for indoor or outdoor use, max rated 45 KVA, Model(s) 704-XXXX, 74X-XXXX, 76-XXXX

Power transformers, "45 Series", Model(s) CI1 with suffix letters and numbers., ESA-XXXXXX.XXX with suffix letters and numbers., PI1 with suffix letters and numbers., R with suffix letters and numbers., WI1 with suffix letters and numbers.

Reactors, Model(s) R Series@

Transformers rated over 10 KVA, Model(s) 411 Series With additional nomenclature to define specific features as allowed by UL file.

Transformers rated over 10 KVA, Model(s) 511 Series With additional nomenclature to define specific features as allowed by UL file.

"IC", Model(s) IC-XXXX-XXX-YYYY IC-SERIES Example: IC - XXXX - XXX - YYYY I II III IV I - IC " Industrial control transformer with class 105°C (A) Insulation II - VA Rating 50-1000 VA III - 000-999 to indicate variations in voltage ratings & taps available. IV - Encapsulated option

* - May be followed by 1 thru 999.

+ - With X's replaced by numerals and/or LM, LY, M or Y.

@ - May be followed by suffix numbers or letters to indicate ratings and voltage combinations.

X - Where X is 0-9.

Y - Where Y is any alphanumeric characters.

Last Updated on 2020-08-31

The appearance of a company's name or product in this database does not in itself assure that products so identified have been manufactured under UL's Follow-Up Service. Only those products bearing the UL Mark should be considered to be Certified and covered under UL's Follow-Up Service. Always look for the Mark on the product.

UL permits the reproduction of the material contained in the Online Certification Directory subject to the following conditions: 1. The Guide Information, Assemblies, Constructions, Designs, Systems, and/or Certifications (files) must be presented in their entirety and in a non-misleading manner, without any manipulation of the data (or drawings). 2. The statement "Reprinted from the Online Certifications Directory with permission from UL" must appear adjacent to the extracted material. In addition, the reprinted material must include a copyright notice in the following format: "© 2020 UL LLC"

UL Product iQ™

XQNX.E78234 - Power and General-purpose Transformers, Dry Type

Power and General-purpose Transformers, Dry Type

See General Information for Power and General-purpose Transformers, Dry Type

DONGAN ELECTRIC MFG CO E78234
34760 Garfield Rd
Fraser, MI 48026 USA

Transformers, Reactors Series 41, 42, 43, 44, 61, 63, 64, 71, 72, 73, 74, 81, 83, 84, ES, ESA, R, SD.

Transformers, rated 15 kva through 1000 kva, Cat. Nos. 421 Series (a), 423 Series (a), 424 Series (a), 431 Series (a), 433 Series (a), 434 Series (a), 521 Series (a), 523 Series (a), 524 Series (a), 531 Series (a), 533 Series (a), 534 Series (a), 425 Series (a), 435 Series (a), 525 Series (a), 535 Series (a)

(a) - With additional nomenclature to define specific features as allowed by UL file

Last Updated on 2018-02-23

The appearance of a company's name or product in this database does not in itself assure that products so identified have been manufactured under UL's Follow-Up Service. Only those products bearing the UL Mark should be considered to be Certified and covered under UL's Follow-Up Service. Always look for the Mark on the product.

UL permits the reproduction of the material contained in the Online Certification Directory subject to the following conditions: 1. The Guide Information, Assemblies, Constructions, Designs, Systems, and/or Certifications (files) must be presented in their entirety and in a non-misleading manner, without any manipulation of the data (or drawings). 2. The statement "Reprinted from the Online Certifications Directory with permission from UL" must appear adjacent to the extracted material. In addition, the reprinted material must include a copyright notice in the following format: "© 2020 UL LLC"

UL Product iQ™

XQNX.E478366 - Power and General-purpose Transformers, Dry Type

Power and General-purpose Transformers, Dry Type

See General Information for Power and General-purpose Transformers, Dry Type

EAGLERISE ELECTRIC & ELECTRONIC (CHINA) CO LTD E478366
A3 GUICHENG SCIENCE & TECHNOLOGY PARK
JIANPING RD
NANHAI DISTRICT
FOSHAN, GUANGDONG 528200 CHINA

Transformer, Model HEPXXXabYYttte, where P can be 1 or 3, XXX can be 015, 025, 030, 045, 075, 100, 112, 150, 167, 225, 300, 500 or 750, a and b can be A to H, J to N, P to U or X, YY can be CU or blank, ttt can be 115 or blank, e shall be blank.

Last Updated on 2019-02-12

The appearance of a company's name or product in this database does not in itself assure that products so identified have been manufactured under UL's Follow-Up Service. Only those products bearing the UL Mark should be considered to be Certified and covered under UL's Follow-Up Service. Always look for the Mark on the product.

UL permits the reproduction of the material contained in the Online Certification Directory subject to the following conditions: 1. The Guide Information, Assemblies, Constructions, Designs, Systems, and/or Certifications (files) must be presented in their entirety and in a non-misleading manner, without any manipulation of the data (or drawings). 2. The statement "Reprinted from the Online Certifications Directory with permission from UL" must appear adjacent to the extracted material. In addition, the reprinted material must include a copyright notice in the following format: "© 2020 UL LLC"

UL Product iQ™

XPTQ.E121540 - Transformers, General Purpose

Transformers, General Purpose

See General Information for Transformers, General Purpose

FEDERAL PACIFIC TRANSFORMER CO E121540
601 OLD AIRPORT RD
BRISTOL, VA 24203-8200 USA

Enclosed: indoor or protected cover use, Model(s) SE

Industrial control transformers, Model(s) S09X.500FC-A1

Transformers, indoor or outdoor, Model(s) FB, may include FH in the type number

Last Updated on 2017-07-21

The appearance of a company's name or product in this database does not in itself assure that products so identified have been manufactured under UL's Follow-Up Service. Only those products bearing the UL Mark should be considered to be Certified and covered under UL's Follow-Up Service. Always look for the Mark on the product.

UL permits the reproduction of the material contained in the Online Certification Directory subject to the following conditions: 1. The Guide Information, Assemblies, Constructions, Designs, Systems, and/or Certifications (files) must be presented in their entirety and in a non-misleading manner, without any manipulation of the data (or drawings). 2. The statement "Reprinted from the Online Certifications Directory with permission from UL" must appear adjacent to the extracted material. In addition, the reprinted material must include a copyright notice in the following format: "© 2020 UL LLC"

UL Product iQ™

XQNX.E37783 - Power and General-purpose Transformers, Dry Type

Power and General-purpose Transformers, Dry Type

See General Information for Power and General-purpose Transformers, Dry Type

FEDERAL PACIFIC TRANSFORMER CO E37783
601 OLD AIRPORT RD
BRISTOL, VA 24203-8200 USA

Trademark and/or Tradename: "E37783"

Insulating transformers, dry type, indoor/weatherproof. Type FH, 600 v, ac max; single/three phase, Models 16B, 36B, 36D, 36F; three phase, Models 36C , 36E.

Serial Nos. 51854, 51536, 53997.

Power Transformers, rated over 10 Kva, dry type, potted indoor and weatherproof enclosures. Single phase, Type FB.

Three phase, Type FB.

Transformer, dry type, indoor/outdoor. Model 36K, rated 9 to 1000 Kva.

Serial No. 51679.

Transformer, dry type, indoor. Cat. No. B, F or H followed by 1 or 3, followed by four numbers (up to 1000), followed by 1, 2, 3, 4 or 9, followed by 1, 2, 3, 4 or 8, followed by 00, 04, 22, 24, 55 or 99.

Transformer, dry-type, enclosed. Type TENV, rated 15-225 Kva.

Kits. for modifying indoor only transformers to outdoor use.

Cat. Nos. 60100 thru 60105, 60110 thru 60116.

Last Updated on 2004-04-03

The appearance of a company's name or product in this database does not in itself assure that products so identified have been manufactured under UL's Follow-Up Service. Only those products bearing the UL Mark should be considered to be Certified and covered under UL's Follow-Up Service. Always look for the Mark on the product.

UL permits the reproduction of the material contained in the Online Certification Directory subject to the following conditions: 1. The Guide Information, Assemblies, Constructions, Designs, Systems, and/or Certifications (files) must be presented in their entirety and in a non-misleading manner, without any manipulation of the data (or drawings). 2. The statement "Reprinted from the Online Certifications Directory with permission from UL" must appear adjacent to the extracted material. In addition, the reprinted material must include a copyright notice in the following format: "© 2020 UL LLC"

UL Product iQ™

XPTQ.E207860 - Transformers, General Purpose

Transformers, General Purpose

See General Information for Transformers, General Purpose

HAMMOND MFG CO LTD E207860
52 RANKIN PL
WATERLOO, ON N2J 3Z5 CANADA

Transformers, Model(s) 3AH, HT, MH, MT, PH, PT

Transformers, fuse kits, Model(s) PFK

Last Updated on 2013-09-16

The appearance of a company's name or product in this database does not in itself assure that products so identified have been manufactured under UL's Follow-Up Service. Only those products bearing the UL Mark should be considered to be Certified and covered under UL's Follow-Up Service. Always look for the Mark on the product.

UL permits the reproduction of the material contained in the Online Certification Directory subject to the following conditions: 1. The Guide Information, Assemblies, Constructions, Designs, Systems, and/or Certifications (files) must be presented in their entirety and in a non-misleading manner, without any manipulation of the data (or drawings). 2. The statement "Reprinted from the Online Certifications Directory with permission from UL" must appear adjacent to the extracted material. In addition, the reprinted material must include a copyright notice in the following format: "© 2020 UL LLC"

UL Product iQ™

XQNX.E112313 - Power and General-purpose Transformers, Dry Type

Power and General-purpose Transformers, Dry Type

See General Information for Power and General-purpose Transformers, Dry Type

HAMMOND POWER SOLUTIONS INC E112313
595 Southgate Dr
Guelph, ON N1G 3W6 CANADA

Power transformers, dry type, indoor and outdoor; 10 kva thru 250 kva, single phase, rated 120v, ac thru 600v, ac primary and secondary.

Power transformers, dry type, indoor and outdoor; 9 kva thru 1000 kva, 3 phase, rated 120v, ac, thru 600v, ac primary and secondary.

Transformers, Types F, FN, K, KN.

Last Updated on 2002-07-08

The appearance of a company's name or product in this database does not in itself assure that products so identified have been manufactured under UL's Follow-Up Service. Only those products bearing the UL Mark should be considered to be Certified and covered under UL's Follow-Up Service. Always look for the Mark on the product.

UL permits the reproduction of the material contained in the Online Certification Directory subject to the following conditions: 1. The Guide Information, Assemblies, Constructions, Designs, Systems, and/or Certifications (files) must be presented in their entirety and in a non-misleading manner, without any manipulation of the data (or drawings). 2. The statement "Reprinted from the Online Certifications Directory with permission from UL" must appear adjacent to the extracted material. In addition, the reprinted material must include a copyright notice in the following format: "© 2020 UL LLC"

UL Product iQ™

XPTQ.E50394 - Transformers, General Purpose

Transformers, General Purpose

See General Information for Transformers, General Purpose

HAMMOND POWER SOLUTIONS INC E50394
595 Southgate Dr
Guelph, ON N1G 3W6 CANADA

Transformers, Model(s) 3AH, 52, 88-250, E, HT, HT, MH, MT, NE-0306-21, NE-0306-22, NE-0306-23, NE-0306-24, NE-0306-25, NE-0306-26, NE-0307-21, NE-0307-22, NE-0307-23, NE-0307-24, NE-0307-25, NE-0307-26, NE-2624-21, NE-2624-22, NE-2624-23, NE-2624-24, NE-2624-25, NE-2624-26, NE-2635-21, NE-2635-22, NE-2635-23, NE-2635-24, NE-2635-25, NE-2635-26, PH, PT

Transformers, single phase, Model(s) Q

Transformers, three phase, Model(s) QT

Last Updated on 2017-09-12

The appearance of a company's name or product in this database does not in itself assure that products so identified have been manufactured under UL's Follow-Up Service. Only those products bearing the UL Mark should be considered to be Certified and covered under UL's Follow-Up Service. Always look for the Mark on the product.

UL permits the reproduction of the material contained in the Online Certification Directory subject to the following conditions: 1. The Guide Information, Assemblies, Constructions, Designs, Systems, and/or Certifications (files) must be presented in their entirety and in a non-misleading manner, without any manipulation of the data (or drawings). 2. The statement "Reprinted from the Online Certifications Directory with permission from UL" must appear adjacent to the extracted material. In addition, the reprinted material must include a copyright notice in the following format: "© 2020 UL LLC"

UL Product iQ™

XPTQ.E4466 - Transformers, General Purpose

Transformers, General Purpose

See General Information for Transformers, General Purpose

JEFFERSON ELECTRIC INC E4466
9650 S FRANKLIN DR
FRANKLIN, WI 53132-8847 USA

Dry type, auto transformers, Model(s) 415 followed by a four (4) place number/letter, followed by a three (3) place number/letter.

Dry type, auto transformers, Model(s) 515 followed by a four (4) place number/letter, followed by a three (3) place number/letter.

General purpose isolation drive transformers rated 7.5 KVA or less, Model(s) 213 , , followed by 0018, 0019 or 0020, followed by 0, 3, 7 or 8, folowed by 0 or 5, followed by 1, 2, 3, 4, 5, 6 or 9.

General purpose isolation drive transformers rated 7.5 KVA or less, Model(s) 313 , , followed by 0018, 0019 or 0020, followed by 0, 3, 7 or 8, folowed by 0 or 5, followed by 1, 2, 3, 4, 5, 6 or 9.

General purpose transformers rated 10 KVA or less, Model(s) 211 , followed by 000 thru 015, followed by 1, 4, 6, 7 or 8, followed by 000, 001, 002, 055, 080, 085, 100, 120, 208, 255, 277, 300, 355, 600 thru 999, 800, 855, 880 or 885.

General purpose transformers rated 10 KVA or less, Model(s) 211-001-487, 211-001-488, 211-001-573

General purpose transformers rated 10 KVA or less, Model(s) 213, , followed by -10, -12 or -14, followed by 2, 4, 7, 8 or 9, followed by 000, 001, 002, 055, 080, 085, 120, 125, 600 thru 999, 800, 855, 880 or 885.

General purpose transformers rated 10 KVA or less, Model(s) 216 , followed by 11, 12, 14, 15 or 16, followed by 00, 01, 11, 21, 31, 41, 51, 61, 71, 81 or 91, followed by 000, 055 or 600 thru 999.

General purpose transformers rated 10 KVA or less, Model(s) 311 , followed by 000 thru 015, followed by 1, 4, 6, 7 or 8, followed by 000, 001, 002, 055, 080, 085, 100, 120, 208, 255, 277, 300, 355, 600 thru 999, 800, 855, 880 or 885.

General purpose transformers rated 10 KVA or less, Model(s) 313, , followed by -10, -12 or -14, followed by 2, 4, 7, 8 or 9, followed by 000, 001, 002, 055, 080, 085, 120, 125, 600 thru 999, 800, 855, 880 or 885.

General purpose transformers rated 10 KVA or less, Model(s) 413 followed by a four (4) place number/letter, followed by a three (3) place number/letter.

General purpose transformers rated 10 KVA or less, Model(s) 416 followed by a four (4) place number/letter, followed by a three (3) place number/letter.

General purpose transformers rated 10 KVA or less, Model(s) 513 followed by a four (4) place number/letter, followed by a three (3) place number/letter.

General purpose transformers rated 10 KVA or less, Model(s) 516 followed by a four (4) place number/letter, followed by a three (3) place number/letter.

Industrial control transformer, 50 VA thru 5000 VA rating, Model(s) 631 Series , followed by 11 through 26, followed by 00 through 14, or 99, followed by 000, 001, 10x, 20x, 30x, or 70x

Industrial control transformers, Model(s) Series 631-A[@], Series 631-B[@], Series 631-C[@]

Industrial control type, Model(s) 636-001-1111, 636-001-1121, 636-001-1131, 636-001-1141, 636-001-1142-600, 636-001-1151, 636-001-1161, 636-001-1171, 636-001-1181, 636-001-1191, 636-001-1201, 636-001-1211, 636-001-2411, 636-001-2421, 636-001-2431, 636-001-2441, 636-001-2451, 636-001-2461, 636-001-2471, 636-001-2481, 636-001-2491, 636-001-2501, 636-001-2511, 636-001-2521, 636-001-264, 637-003-495, 637-003-778, 637-1003-399, 637-1003-400, 637-1003-401, 637-1003-520, 637-1003-521, 637-1003-522, 637-201 (f), 637-206 (f), 637-208 (f), 637-209 (f), 637-211 (f), 637-216 (f), 637-218 (f), 637-219 (f),

637-221 (f), 637-221-028, 637-226 (f), 637-228 (f), 637-229 (f), 637-231 (f), 637-231-011, 637-236 (f), 637-238 (f), 637-239 (f), 637-261 (f), 637-26600, 637-268 (f), 637-269 (f), 637-271 (f), 637-276 (f), 637-278 (f), 637-279 (f), 637-281 (f), 637-286 (f), 637-288 (f), 637-289 (f), 637-291 (f), 637-296 (f), 637-298 (f), 637-299 (f), 637-361 (f), 637-366 (f), 637-369 (f), 637-371 (f), 637-376 (f), 637-379 (f), 637-381 (f), 637-386 (f), 637-389 (f), 637-391 (f), 637-396 (f), 637-399 (f), 637-401 (f), 637-406 (f), 637-409 (f), 637-411 (f), 637-421 (f), 637-431 (f), 637-441 (f), 637-451 (f), 637-461 (f), 637-466 (f), 637-469 (f), 637-471 (f), 637-476 (f), 637-479 (f), 637-481 (f) (h), 637-486 (f), 637-489 (f), 637-491 (f), 637-496 (f), 637-499 (f), 637-531 (f), 637-536 (f), 637-539 (f), 637-551 (f), 637-556 (f), 637-559 (f), 637-561 (f), 637-566 (f), 637-569 (f), 637-571 (f), 637-576 (f), 637-579 (f), 637-581 (f), 637-586 (f), 637-589 (f), 637-591 (f), 637-596 (f), 637-599 (f), 637-601 (f), 637-606 (f), 637-608 (f), 637-609 (f), 637-611 (f), 637-616 (f), 637-618 (f), 637-619 (f), 637-621 (f), 637-626 (f), 637-628 (f), 637-629 (f), 637-631 (f), 637-636 (f), 637-638 (f), 637-639 (f), 637-701 (f), 637-706 (f), 637-708 (f), 637-709 (f), 637-711 (f), 637-716 (f), 637-718 (f), 637-719 (f), 637-721 (f), 637-726 (f), 637-729 (f), 637-731 (f), 637-736 (f), 637-738 (f), 637-739 (f), 637-741 (f), 637-746 (f), 637-748 (f), 637-749 (f), 637-807 (f)

Transformers designed to supply current to circuits or devices requiring limited amounts of power, Model(s) 231-101 , with or without suffix -030 or -035., 231-111 , with or without suffix -030 or -035., 31-141 , with or without suffix -030 or -035.

Transformers rated over 10 KVA, Model(s) 211 , followed by 16 or 18, followed by 1, 4, 6, 7 or 8, followed by 000, 055, 080, 085, 100, 120, 208, 255, 277, 300, 355, 600 thru 999.

Transformers rated over 10 KVA, Model(s) 213 , followed by 16, followed by 2, 4, 7, 8 or 9, followed by 000, 055, 080, 085, 120, 125, 600 thru 999.

Transformers rated over 10 KVA, Model(s) 411 followed by a four (4) place number/letter, followed by a three (3) place number/letter.

Transformers rated over 10 KVA, Model(s) 511 followed by a four (4) place number/letter, followed by a three (3) place number/letter.

[@] - followed by a four (4) place number/letter, followed by a three (3) place number/letter. Each unit

Last Updated on 2019-10-25

The appearance of a company's name or product in this database does not in itself assure that products so identified have been manufactured under UL's Follow-Up Service. Only those products bearing the UL Mark should be considered to be Certified and covered under UL's Follow-Up Service. Always look for the Mark on the product.

UL permits the reproduction of the material contained in the Online Certification Directory subject to the following conditions: 1. The Guide Information, Assemblies, Constructions, Designs, Systems, and/or Certifications (files) must be presented in their entirety and in a non-misleading manner, without any manipulation of the data (or drawings). 2. The statement "Reprinted from the Online Certifications Directory with permission from UL" must appear adjacent to the extracted material. In addition, the reprinted material must include a copyright notice in the following format: "© 2020 UL LLC"

UL Product iQ™

XQNX.E78376 - Power and General-purpose Transformers, Dry Type

Power and General-purpose Transformers, Dry Type

See General Information for Power and General-purpose Transformers, Dry Type

JEFFERSON ELECTRIC INC E78376
9650 S FRANKLIN DR
FRANKLIN, WI 53132-8847 USA

Transformers rated over 10 kva, Cat. Nos. 221, 223, followed by suffixes.

Transformers rated over 10 kva, for nonsinusoided load use, Cat. No. 217, followed by 318, 320, 322, 323, 324 or 327, followed by 5 or 7, followed by 0, 1, 7 or 8, followed by 0, 5 or 8, followed by 0 through 7; Cat. No. 224, followed by 316, 319 through 323, 325, 326, 329, 331 or 334, followed by 1 through 5 or 9, followed by 0, 1, 7 or 8, followed by 0, 5 or 8, followed by 0 through 7.

Transformers rated 15 kva through 1000 kva, Cat. Nos. 423-, 424, 431, 433, 434, 523, 524, 531, 533 and 534 followed by a 4 digit number/letter, followed by a 3 digit number/letter, rated 25 kva through 667 kva; Cat. Nos. 421, 521 followed by a 3 digit number followed by 0 one digit number, followed by a 3 digit number. Cat. Nos. 425, 435, 525 and 535 followed by a four (4) place number/letter, followed by a three (3) place number/letter.

Last Updated on 2010-08-05

The appearance of a company's name or product in this database does not in itself assure that products so identified have been manufactured under UL's Follow-Up Service. Only those products bearing the UL Mark should be considered to be Certified and covered under UL's Follow-Up Service. Always look for the Mark on the product.

UL permits the reproduction of the material contained in the Online Certification Directory subject to the following conditions: 1. The Guide Information, Assemblies, Constructions, Designs, Systems, and/or Certifications (files) must be presented in their entirety and in a non-misleading manner, without any manipulation of the data (or drawings). 2. The statement "Reprinted from the Online Certifications Directory with permission from UL" must appear adjacent to the extracted material. In addition, the reprinted material must include a copyright notice in the following format: "© 2020 UL LLC"

UL Product iQ™

XPTQ7.E79947 - Transformers, General Purpose Certified for Canada

Transformers, General Purpose Certified for Canada

See General Information for Transformers, General Purpose Certified for Canada

ACME ELECTRIC, A DIVISION OF HUBBELL INCORPORATED (DELAWARE) E79947
N56 W13385 Silver Spring Dr
Menomonee Falls, WI 53051 USA
Air cooled reactors, Model(s) Series LWE with prefixes

General purpose transformers, indoor or protected cover use, "SE", Model(s) Series or style SE

General purpose transformers, indoor use only, Model(s) Series or style EB

General purpose transformers, indoor, protected cover or outdoor use, "SR", Model(s) Series or style SR

Industrial control transformers, Model(s) AE, CE, FS, TA, TB

Trademark and/or Tradename: Acme Electric®

Last Updated on 2019-05-08

The appearance of a company's name or product in this database does not in itself assure that products so identified have been manufactured under UL's Follow-Up Service. Only those products bearing the UL Mark should be considered to be Certified and covered under UL's Follow-Up Service. Always look for the Mark on the product.

UL permits the reproduction of the material contained in the Online Certification Directory subject to the following conditions: 1. The Guide Information, Assemblies, Constructions, Designs, Systems, and/or Certifications (files) must be presented in their entirety and in a non-misleading manner, without any manipulation of the data (or drawings). 2. The statement "Reprinted from the Online Certifications Directory with permission from UL" must appear adjacent to the extracted material. In addition, the reprinted material must include a copyright notice in the following format: "© 2020 UL LLC"

UL Product iQ™

XPTQ7.E506261 - Transformers, General Purpose Certified for Canada

Transformers, General Purpose Certified for Canada

See General Information for Transformers, General Purpose Certified for Canada

CONTROL TRANSFORMER INC E506261
3701 Warren Meadville Rd
Cortland, OH 44410-9464 USA
Model(s) PWR-2637

Last Updated on 2019-03-05

The appearance of a company's name or product in this database does not in itself assure that products so identified have been manufactured under UL's Follow-Up Service. Only those products bearing the UL Mark should be considered to be Certified and covered under UL's Follow-Up Service. Always look for the Mark on the product.

UL permits the reproduction of the material contained in the Online Certification Directory subject to the following conditions: 1. The Guide Information, Assemblies, Constructions, Designs, Systems, and/or Certifications (files) must be presented in their entirety and in a non-misleading manner, without any manipulation of the data (or drawings). 2. The statement "Reprinted from the Online Certifications Directory with permission from UL" must appear adjacent to the extracted material. In addition, the reprinted material must include a copyright notice in the following format: "© 2020 UL LLC"

UL Product iQ™

XQNX7.E495103 - Power and General-purpose Transformers, Dry Type Certified for Canada

Power and General-purpose Transformers, Dry Type Certified for Canada

See General Information for Power and General-purpose Transformers, Dry Type Certified for Canada

CONTROL TRANSFORMER INC E495103
3701 Warren Meadville Rd
Cortland, OH 44410-9464 USA
Dry Type Ventilated Autotransformer, E12884.

Last Updated on 2017-09-14

The appearance of a company's name or product in this database does not in itself assure that products so identified have been manufactured under UL's Follow-Up Service. Only those products bearing the UL Mark should be considered to be Certified and covered under UL's Follow-Up Service. Always look for the Mark on the product.

UL permits the reproduction of the material contained in the Online Certification Directory subject to the following conditions: 1. The Guide Information, Assemblies, Constructions, Designs, Systems, and/or Certifications (files) must be presented in their entirety and in a non-misleading manner, without any manipulation of the data (or drawings). 2. The statement "Reprinted from the Online Certifications Directory with permission from UL" must appear adjacent to the extracted material. In addition, the reprinted material must include a copyright notice in the following format: "© 2020 UL LLC"

UL Product iQ™

XPTQ7.E3210 - Transformers, General Purpose Certified for Canada

Transformers, General Purpose Certified for Canada

See General Information for Transformers, General Purpose Certified for Canada

DONGAN ELECTRIC MFG CO E3210
34760 Garfield Rd
Fraser, MI 48026 USA

Dry type, auto transformers, Model(s) 415 Series With additional nomenclature to define specific features as allowed by UL file.

Dry type, auto transformers, Model(s) 515 Series With additional nomenclature to define specific features as allowed by UL file.

General purpose autotransformers, Model(s) 34 Series@

General purpose transformers, "Series 75", Model(s) ESA-XXXXX.XXX and R

General purpose transformers, "Series 75", Model(s) Series 75 followed by suffix numbers to indicate ratings

General purpose transformers, "Series 75", Model(s) Series CI3 followed by suffix numbers to indicate ratings

General purpose transformers, "Series 75", Model(s) Series PI3 followed by suffix numbers to indicate ratings

General purpose transformers, "Series 75", Model(s) Series WI3 followed by suffix numbers to indicate ratings

General purpose transformers, Model(s) NSC-XX-TY-Y1Y2

General purpose transformers rated 10 KVA or less, Model(s) 413 Series With additional nomenclature to define specific features as allowed by UL file.

General purpose transformers rated 10 KVA or less, Model(s) 416 Series With additional nomenclature to define specific features as allowed by UL file.

General purpose transformers rated 10 KVA or less, Model(s) 513 Series With additional nomenclature to define specific features as allowed by UL file.

General purpose transformers rated 10 KVA or less, Model(s) 516 Series With additional nomenclature to define specific features as allowed by UL file.

General purpose transformers, indoor use only, Model(s) 35 Series@, 80 and 95 Series@

Industrial control transformers, Model(s) 50-0025-XXX thru 50-5000-XXX

Industrial control transformers, Model(s) AC or HC , followed by four digits, followed by 1, 2, 3, 4 or 6, followed by 1, 2, 3, 4, 5, 6, 7, 8 or 9, with or without SH.

Industrial control transformers, Model(s) AC-XXXX Y1Y2, BC-XXXX-Y1Y2, ES-XXXXX-XXX, IC-0010-XXX-YYYY thru IC-1000-XXX-YYYY

Industrial control transformers, Model(s) NSC , followed by 21 thru 35, followed by A, B, or H, followed by 1, 2, 4 or 6, followed by four digits.

Industrial control transformers, Model(s) Y1Y2

Insulating transformers, indoor use only, "35 Series", Model(s) 35-05

Insulating transformers, indoor use only, "35 Series", Model(s) 35-05, 35-10, 35-15, 35-20, 35-25, 35-35, 35-50 or 35-75, followed by -3, -9, -16, -18, -58, -126, -132, -250, -303, -309, -342, -419, -FB6, -KSPEC, -LM, -LY, -M, -S or -Y.

Insulating transformers, indoor use only, "35 Series", Model(s) 35-10, 35-15, 35-25, 35-50, 35-75, 35-XXXX+

Insulating transformers, indoor use only, Model(s) 33 Series@, 36-05 , followed by A, C, KA, KC, KN, KS, N, S., 36-10 , followed by A,

C, KA, KC, KN, KS, N, S., 36-100 , followed by A, C, KA, KC, KN, KS, N, S., 36-25 , followed by A, C, KA, KC, KN, KS, N, S., 36-50 , followed by A, C, KA, KC, KN, KS, N, S., 36-75 , followed by A, C, KA, KC, KN, KS, N, S.

Isolation power transformers for indoor or outdoor use, Model(s) 35-05, 35-10, 35-15, 35-25, 35-50, 35-75, 35-XXXX+, 45-XXXX, 712XX-XXXX, 85-XXXX, AP-XXXX, ES-XXXXX-XXX, FP-XXXX

Isolation power transformers for indoor or outdoor use, max rated 45 KVA, Model(s) 704-XXXX, 74X-XXXX, 76-XXXX

Power transformers, "45 Series", Model(s) CI1 with suffix letters and numbers., ESA-XXXXXX.XXX with suffix letters and numbers., PI1 with suffix letters and numbers., R with suffix letters and numbers., WI1 with suffix letters and numbers.

Reactors, Model(s) R Series@

Transformers rated over 10 KVA, Model(s) 411 Series With additional nomenclature to define specific features as allowed by UL file.

Transformers rated over 10 KVA, Model(s) 511 Series With additional nomenclature to define specific features as allowed by UL file.

"IC", Model(s) IC-XXXX-XXX-YYYY IC-SERIES Example: IC - XXXX - XXX - YYYY I II III IV I - IC " Industrial control transformer with class 105°C (A) Insulation II - VA Rating 50-1000 VA III - 000-999 to indicate variations in voltage ratings & taps available. IV - Encapsulated option

+ - With X's replaced by numerals and/or LM, LY, M or Y.

@ - May be followed by suffix numbers or letters to indicate ratings and voltage combinations.

X - Where X is 0-9.

Y - Where Y is any alphanumeric characters.

Last Updated on 2020-08-31

The appearance of a company's name or product in this database does not in itself assure that products so identified have been manufactured under UL's Follow-Up Service. Only those products bearing the UL Mark should be considered to be Certified and covered under UL's Follow-Up Service. Always look for the Mark on the product.

UL permits the reproduction of the material contained in the Online Certification Directory subject to the following conditions: 1. The Guide Information, Assemblies, Constructions, Designs, Systems, and/or Certifications (files) must be presented in their entirety and in a non-misleading manner, without any manipulation of the data (or drawings). 2. The statement "Reprinted from the Online Certifications Directory with permission from UL" must appear adjacent to the extracted material. In addition, the reprinted material must include a copyright notice in the following format: "© 2020 UL LLC"

UL Product iQ™

XQNX7.E78234 - Power and General-purpose Transformers, Dry Type Certified for Canada

Power and General-purpose Transformers, Dry Type Certified for Canada

See General Information for Power and General-purpose Transformers, Dry Type Certified for Canada

DONGAN ELECTRIC MFG CO E78234
34760 Garfield Rd
Fraser, MI 48026 USA
Transformers, Reactors Series 41, 42, 61, 81, 43, 44, 63, 64, 71, 72, 73, 74, 83, 84, ES, ESA, SD and R.

Dry type enclosed power transformers, 421 Series (a), 423 Series (a), 424 Series (a), 431 Series (a), 433 Series (a), 434 Series (a), 521 Series (a), 523 Series (a), 524 Series (a), 531 Series (a), 533 Series (a), 534 Series (a), 425 Series (a), 435 Series (a), 525 Series (a), 535 Series (a).

(a) - With additional nomenclature to define specific features as allowed by UL file

Last Updated on 2018-02-23

The appearance of a company's name or product in this database does not in itself assure that products so identified have been manufactured under UL's Follow-Up Service. Only those products bearing the UL Mark should be considered to be Certified and covered under UL's Follow-Up Service. Always look for the Mark on the product.

UL permits the reproduction of the material contained in the Online Certification Directory subject to the following conditions: 1. The Guide Information, Assemblies, Constructions, Designs, Systems, and/or Certifications (files) must be presented in their entirety and in a non-misleading manner, without any manipulation of the data (or drawings). 2. The statement "Reprinted from the Online Certifications Directory with permission from UL" must appear adjacent to the extracted material. In addition, the reprinted material must include a copyright notice in the following format: "© 2020 UL LLC"

UL Product iQ™

XQNX7.E478366 - Power and General-purpose Transformers, Dry Type Certified for Canada

Power and General-purpose Transformers, Dry Type Certified for Canada

See General Information for Power and General-purpose Transformers, Dry Type Certified for Canada

EAGLERISE ELECTRIC & ELECTRONIC (CHINA) CO LTD E478366
A3 GUICHENG SCIENCE & TECHNOLOGY PARK
JIANPING RD
NANHAI DISTRICT
FOSHAN, GUANGDONG 528200 CHINA

Transformer, Model HEPXXXabYYttte, where P can be 1 or 3, XXX can be 015, 025, 030, 045, 075, 100, 112, 150, 167, 225, 300, 500 or 750, a and b can be A to H, J to N, P to U or X, YY can be CU or blank, ttt can be 115 or blank, e shall be blank.

Last Updated on 2019-02-12

The appearance of a company's name or product in this database does not in itself assure that products so identified have been manufactured under UL's Follow-Up Service. Only those products bearing the UL Mark should be considered to be Certified and covered under UL's Follow-Up Service. Always look for the Mark on the product.

UL permits the reproduction of the material contained in the Online Certification Directory subject to the following conditions: 1. The Guide Information, Assemblies, Constructions, Designs, Systems, and/or Certifications (files) must be presented in their entirety and in a non-misleading manner, without any manipulation of the data (or drawings). 2. The statement "Reprinted from the Online Certifications Directory with permission from UL" must appear adjacent to the extracted material. In addition, the reprinted material must include a copyright notice in the following format: "© 2020 UL LLC"

UL Product iQ™

XPTQ7.E121540 - Transformers, General Purpose Certified for Canada

Transformers, General Purpose Certified for Canada

See General Information for Transformers, General Purpose Certified for Canada

FEDERAL PACIFIC TRANSFORMER CO E121540
601 OLD AIRPORT RD
BRISTOL, VA 24203-8200 USA
Industrial control transformers, Model(s) S09X.500FC-A1

Transformers, indoor or outdoor, Model(s) FB, may include FH in the type number

Last Updated on 2017-07-21

The appearance of a company's name or product in this database does not in itself assure that products so identified have been manufactured under UL's Follow-Up Service. Only those products bearing the UL Mark should be considered to be Certified and covered under UL's Follow-Up Service. Always look for the Mark on the product.

UL permits the reproduction of the material contained in the Online Certification Directory subject to the following conditions: 1. The Guide Information, Assemblies, Constructions, Designs, Systems, and/or Certifications (files) must be presented in their entirety and in a non-misleading manner, without any manipulation of the data (or drawings). 2. The statement "Reprinted from the Online Certifications Directory with permission from UL" must appear adjacent to the extracted material. In addition, the reprinted material must include a copyright notice in the following format: "© 2020 UL LLC"

UL Product iQ™

XQNX7.E37783 - Power and General-purpose Transformers, Dry Type Certified for Canada

Power and General-purpose Transformers, Dry Type Certified for Canada

See General Information for Power and General-purpose Transformers, Dry Type Certified for Canada

FEDERAL PACIFIC TRANSFORMER CO E37783
601 OLD AIRPORT RD
BRISTOL, VA 24203-8200 USA

Insulating transformers, dry type, indoor/weatherproof. Type FH, 600 v, ac max; single/three phase, Models 16B, 36B, 36D, 36F; three phase, Models 36C, 36E.

Serial Nos. 51854, 51536, 53997.

Power transformers, rated over 10 Kva, dry type, potted, indoor and weatherproof enclosures.

Three phase, Type FB.

Transformer, dry type, indoor/outdoor. Model 36K, rated 9 to 1000 Kva.

Serial No. 51679.

Transformer, dry-type, enclosed. Type TENV, rated 15-225 Kva.

Kits. for modifying indoor only transformers to outdoor use.

Cat. Nos. 60100 thru 60105, 60110 thru 60116.

Trademark and/or Tradename: "E37783"

Last Updated on 2004-04-03

The appearance of a company's name or product in this database does not in itself assure that products so identified have been manufactured under UL's Follow-Up Service. Only those products bearing the UL Mark should be considered to be Certified and covered under UL's Follow-Up Service. Always look for the Mark on the product.

UL permits the reproduction of the material contained in the Online Certification Directory subject to the following conditions: 1. The Guide Information, Assemblies, Constructions, Designs, Systems, and/or Certifications (files) must be presented in their entirety and in a non-misleading manner, without any manipulation of the data (or drawings). 2. The statement "Reprinted from the Online Certifications Directory with permission from UL" must appear adjacent to the extracted material. In addition, the reprinted material must include a copyright notice in the following format: "© 2020 UL LLC"

UL Product iQ™

XPTQ7.E50394 - Transformers, General Purpose Certified for Canada

Transformers, General Purpose Certified for Canada

See General Information for Transformers, General Purpose Certified for Canada

HAMMOND POWER SOLUTIONS INC E50394
595 Southgate Dr
Guelph, ON N1G 3W6 CANADA
Transformers, Model(s) 3AH, HT, HT, MH, MT, PH, PT

Last Updated on 2017-09-12

The appearance of a company's name or product in this database does not in itself assure that products so identified have been manufactured under UL's Follow-Up Service. Only those products bearing the UL Mark should be considered to be Certified and covered under UL's Follow-Up Service. Always look for the Mark on the product.

UL permits the reproduction of the material contained in the Online Certification Directory subject to the following conditions: 1. The Guide Information, Assemblies, Constructions, Designs, Systems, and/or Certifications (files) must be presented in their entirety and in a non-misleading manner, without any manipulation of the data (or drawings). 2. The statement "Reprinted from the Online Certifications Directory with permission from UL" must appear adjacent to the extracted material. In addition, the reprinted material must include a copyright notice in the following format: "© 2020 UL LLC"

UL Product iQ™

XPTQ7.E4466 - Transformers, General Purpose Certified for Canada

Transformers, General Purpose Certified for Canada

See General Information for Transformers, General Purpose Certified for Canada

JEFFERSON ELECTRIC INC E4466
9650 S FRANKLIN DR
FRANKLIN, WI 53132-8847 USA

Dry type, auto transformers, Model(s) 415 followed by a four (4) place number/letter, followed by a three (3) place number/letter.

Dry type, auto transformers, Model(s) 515 followed by a four (4) place number/letter, followed by a three (3) place number/letter.

General purpose transformers rated 10 KVA or less, Model(s) 413 followed by a four (4) place number/letter, followed by a three (3) place number/letter.

General purpose transformers rated 10 KVA or less, Model(s) 416 followed by a four (4) place number/letter, followed by a three (3) place number/letter.

General purpose transformers rated 10 KVA or less, Model(s) 513 followed by a four (4) place number/letter, followed by a three (3) place number/letter.

General purpose transformers rated 10 KVA or less, Model(s) 516 followed by a four (4) place number/letter, followed by a three (3) place number/letter.

Industrial control transformer, 50 VA thru 5000 VA rating, Model(s) 631 Series , followed by 11 through 26, followed by 00 through 14, or 99, followed by 000, 001, 10x, 20x, 30x, or 70x

Industrial control transformers, Model(s) Series 631-A[@], Series 631-B[@], Series 631-C[@]

Transformers rated over 10 KVA, Model(s) 411 followed by a four (4) place number/letter, followed by a three (3) place number/letter.

Transformers rated over 10 KVA, Model(s) 511 followed by a four (4) place number/letter, followed by a three (3) place number/letter.

[@] - followed by a four (4) place number/letter, followed by a three (3) place number/letter. Each unit

Last Updated on 2019-10-25

The appearance of a company's name or product in this database does not in itself assure that products so identified have been manufactured under UL's Follow-Up Service. Only those products bearing the UL Mark should be considered to be Certified and covered under UL's Follow-Up Service. Always look for the Mark on the product.

UL permits the reproduction of the material contained in the Online Certification Directory subject to the following conditions: 1. The Guide Information, Assemblies, Constructions, Designs, Systems, and/or Certifications (files) must be presented in their entirety and in a non-misleading manner, without any manipulation of the data (or drawings). 2. The statement "Reprinted from the Online Certifications Directory with permission from UL" must appear adjacent to the extracted material. In addition, the reprinted material must include a copyright notice in the following format: "© 2020 UL LLC"

Certification

Manufacturer: Larson Electronics LLC
Address: 9419 US-HWY 175
Kemp, Texas 75143

Declare the following equipment conforms to the standard(s) as listed:

Model: MT Series
Description: Transformers

Evaluated Listings:

CE: DIRECTIVE 2014/35/EU - LOW VOLTAGE DIRECTIVE
CE: DIRECTIVE 2014/30/EU - EMC DIRECTIVE
CE: Regulation (EC) No 1907/2006 - REACH REGULATION
CE: DIRECTIVE 2015/863/EU - ROHS DIRECTIVE

The MT series complies with the essential protection requirements of the European Parliament of the Council Directive for Low Voltage Directive, EMC Directive, REACH Regulation, and RoHS Directive. This certification applies to all specimens manufactured in accordance to the manufacture's drawings.

Signed for and on behalf of: Larson Electronics, LLC
Place of issue: Kemp, TX

Signature: James Thomas

Name: James Thomas
Position: Operations Manager

Certification

Manufacturer: Larson Electronics LLC
Address: 9419 US-HWY 175
Kemp, Texas 75143

Declare the following equipment conforms to the standard(s) as listed:

Model: MT Series
Description: Transformers

Evaluated Listings:

CE: Regulation (EC) No 1907/2006 - REACH REGULATION
CE: DIRECTIVE 2015/863/EU - ROHS DIRECTIVE

This is to certify that products offered by Larson Electronics LLC comply with the Reduction of Hazardous Substances (RoHS) directives. Directive 2002/95/EC became effective on 1 July 2006. It restricts the use of six substances in the manufacture of electrical and electronic equipment. This directive was revised in June 2011 and is now referred to as directive 2011/65/EU. Directive 2015/863/EU amending Annex II to Directive 2011/65/EU announced plans to add four substances from 22 July 2019.

We hereby certify that the equipment specified above conforms to the Directive(s) by containing less of the restricted substances than the stated limits.

Signed for and on behalf of: Larson Electronics, LLC
Place of issue: Kemp, TX

Signature: James Thomas

Name: James Thomas
Position: Operations Manager

Certification

Manufacturer: Larson Electronics LLC
Address: 9419 US-HWY 175
Kemp, Texas 75143

Declare the following equipment conforms to the standard(s) as listed:

Model: MT Series
Description: Transformers

Evaluated Listings:

CE: Regulation (EC) No 1907/2006 - REACH REGULATION

This letter establishes the opinion of Larson Electronics LLC regarding the status, under the current European Union ("EU") Regulations on Registration, Evaluation, Authorization, and Restriction of Chemical Substances ("REACH").

REACH does not apply to manufactured products which are referred to as "completed articles". Substances (chemicals) are subject to REACH registration, NOT products.

In addition, Articles are exempt from the REACH requirements if (a) the Article does not contain a substance of very high concern or candidate substance in an amount exceeding 0.1% weight by weight, and (b) if substances present in the Article in excess of 1 ton per year per importer are not expected nor intended to be released.

Based on communication with our raw material suppliers, we conclude that to the best of our knowledge our products requiring REACH compliance do not contain any of the currently listed SVHC in concentrations of 0.1% or above.

Accordingly, we foresee no registration or pre-registration requirement for the products we supply.

Signed for and on behalf of: Larson Electronics, LLC
Place of issue: Kemp, TX

Signature: James Thomas

Name: James Thomas
Position: Operations Manager

Larson Electronics LLC
9419 E US HWY 175, Kemp, TX 75143
Phone: 800.369.6671

www.LarsonElectronics.com
Email: sales@LarsonElectronics.com
Fax: 903.765.7664

Frequently Asked Questions (FAQ)

Q. What are BuckBoost Transformers and where are they used?

A. Buck-boost transformers are potted transformers with low voltage secondary windings. By field connecting the primary and secondary windings in an autotransformer configuration (not isolated), they offer an economical solution to the adjustment of line voltages that are slightly above or below normal. These transformers should be used to adjust stable voltages only.

Q. Can a Buck-Boost Transformer regulate the output voltage?

A. No. A buck-boost transformer will not regulate the voltage. If the input voltage varies, then the output voltage will also vary by the same percentage. The output (or secondary voltage) of a buck-boost transformer is dependent on the primary voltage and the transformer turns ratio. Therefore, fluctuations in the secondary voltage are direct results of any fluctuations in the primary voltage. We do offer voltage regulators.

Q. Will a Buck-Boost Transformer create a neutral on the output? My application requires a neutral.

A. No. A buck-boost transformer will not derive a neutral. If your application requires a neutral and you do not already have a neutral, you will require an isolation transformer. Neither single phase or three phase buck-boost transformers will create a neutral.

Q. Will a Buck-Boost Transformer output even voltage on both output legs?

A. No. Our standard buck-boost transformers do not generate even legs. For single phase applications, we do offer a line of buck-boost transformers that will output even legs. Three phase units will not output even legs. If you require even legs on the output voltage, we recommend purchasing an isolation transformer and not a buck-boost transformer.

Q. Why do BuckBoost transformers have 4 windings?

A. A four winding buck-boost transformer with 2 primary and 2 secondary windings can be connected eight different ways to provide a multitude of voltages and kVA's. This provides the flexibility necessary for the broad variety of applications. A two-winding transformer can only be connected in two different ways.

Q. How does a buckboost transformer differ from an isolating transformer?

A. A Buck-Boost transformer is manufactured as an isolating transformer, with separate primary and secondary windings and is shipped from the factory in that configuration. When field connected for a buck-boost application, the primary and secondary windings are wired together which changes the transformer's electrical characteristics to those of an autotransformer. The primary and secondary windings are no longer isolated as they are connected together.

Q. What is the difference between a buckboost transformer and an autotransformer?

A. A Buck-Boost transformer is typically a small single-phase low voltage lighting transformer that can be wired as an autotransformer to provide small voltage corrections for single and three phase applications. An autotransformer is a transformer with a direct connection between the primary and secondary and does not act as an isolation transformer. Autotransformers can also include wider classes of products including buck-boost, dedicated three coil distribution style units, motor starting autotransformers and solar grid tie transformers.

Q. As an autotransformer, how can a BuckBoost transformer supply the same electrical load rating as a low voltage lighting isolation transformer that is much larger?

A. With an autotransformer, only a portion of the current acts as a load on the transformer. This portion is roughly proportional to the voltage change. If you increase the voltage from 100VAC to 120VAC, you are roughly adding 20% (20/100). As a result, only about 20% of the current acts as a load on the transformer. This is a function of changing the voltage by a

small amount. For example, if the transformer is connected in such a way that 22 volts is added to a 208 volt primary, a 230-volt output will result. Only a portion of the current goes through a buck-boost autotransformer roughly equivalent to the voltage change. As a result, if a buck boost transformer changes the voltage by 10%, only 10% of the current (kVA) go through the unit. This allows the buck-boost transformer to be smaller and cheaper to manufacturer over an isolation transformer.

Q. Do BuckBoost transformers present a safety hazard compared to conventional autotransformers?

A. No. A buck-boost transformer will only change the voltage by a small amount, such as 208 to 240 volts. This small increase or decrease does not represent a safety hazard. Conventional autotransformers, manufactured as single winding transformers, change much higher magnitudes of voltage, e.g. 480 to 240 volts. In a system where the line is grounded, it is possible to have 480 volts to ground when the expectations are that 240 volts is at the output. For this reason, qualified personnel only should maintain conventional autotransformers.

Q. BuckBoost transformers are almost always installed as autotransformers. Does the National Electrical Code (NEC) permit the use of autotransformers?

A. You can refer to N.E.C. Article 450-4, “Autotransformers 600 Volts, Nominal, or Less”, as a reference publication. Item (a) details over-current protection for an autotransformer, and Item (b) covers an isolation transformer being field connected as an autotransformer for a Buck-Boost application.

Q. When a BuckBoost transformer is connected as an autotransformer, what is the procedure for determining the current rating of the overcurrent protective device, such as the fuse or circuit breaker?

A. The NEC Article 450-4 outlines over-current protection for autotransformers. It is reproduced as follows: “NEC 450-4 – Autotransformers 600 Volts, Nominal, or Less (a) Over-current Protection. Each autotransformer 600 volts nominal, or less shall be protected by an individual over-current device installed in series with each ungrounded input conductor. Such overcurrent device shall be rated or set at not more than 125 percent of the rated full load input current of the autotransformer. An over-current device shall not be installed in series with the shunt winding. Exception: Where the rated input current of an auto transformer is 9 amperes or more and 125 percent of this current does not correspond to a standard rating of a fuse or non-adjustable circuit breaker; the next higher standard rating described in our section shall be permitted. When the rated input current is less than 9 amperes, an over-current device rated or set at not more than 167 percent of the input current shall be permitted. (b) Transformer Field-Connected as an Autotransformer. A transformer field-connected as autotransformers shall be identified for use at elevated voltage.”

Q. What is a Transformer?

A. It is a static electrical device, which, by electromagnetic induction transforms energy at one voltage and current to another voltage and current at the same frequency.

Q. What is a StepUp Transformer? What is a StepDown Transformer?

A. In a step-up transformer, the low voltage winding (secondary) is connected to the input or power source and the high voltage winding (primary) is connected to the output or load. In a step-down transformer, the high voltage winding (primary) is connected to the input or power source and the low voltage winding (secondary) to the output or load.

Q. What does the abbreviation KVA stand for? What is VoltAmperes (VA)?

A. “Kilovolt Ampere Rating” designates the output that a transformer can deliver for a specified time at rated secondary voltage and rated frequency without exceeding the specified temperature rise. (1 kVA = 1000 VA, or 1000 volt amperes). The VA or volt-ampere output rating designates the output that a transformer can deliver for a specified time at its rated secondary voltage and rated frequency, without exceeding its specified temperature rise. It is the current flowing in a circuit multiplied by the voltage of the circuit.

Q. What is Primary Voltage and Secondary Voltage Rating?

A. Primary voltage rating designates the input circuit voltage for which the primary winding is designed. Secondary voltage rating designates the no-load circuit voltage for which the secondary winding (winding on the output side) is designed.

Q. What does 50/60 Hertz mean?

A. Transformers that are designed to specifically run at 60 Hz can't be run at 50 Hz or in some cases only with significant derating. Magnetic flux is proportional to frequency so a 50 Hz transformer has a core 20% larger to handle 20% more magnetic flux than a 60 Hz unit. A 50 Hz transformer will simply run cooler at 60 Hz given the proper voltage is applied. Transformers cannot change frequency, the primary frequency equals the secondary frequency.

Q. Explain the term Phase?

A. It is a type of AC electrical circuit; usually single phase 2-wire or 3-wire, or three-phase, 3 or 4 wire. a single phase 3 wire system may also be referred to as "split phase" or two-phase.

Q. What is a Delta, Wye, and Center Tap connection?

A. The delta connection is a standard three phase connection with the ends of each phase winding connected in series to form a closed loop with each phase 120 degrees from the other. The wye connection is a standard 3-wire transformer connection with similar ends of the single-phase coils connected. This common point forms the electrical neutral point and may be grounded. A center tap is a reduced capacity tap at the midpoint in a winding.

Q. What are the differences between copper and aluminum windings? Copper has better conductivity but less life expectancy, correct?

A. We design our copper and aluminum units to meet the same specifications. Aluminum coils need to use larger wires, but the user does not see any difference. The copper coils are physically smaller, but we put them in the same enclosure as the Aluminum, so the user will not see any difference. The terminals are the same, so the user will not see any difference. Most wiring lugs are tin-plated so there is no problem connecting the transformer to aluminum or copper wires. Conductivity is addressed in the design by using larger wire in aluminum units. There is no difference in life expectancy for copper. The only real difference is that Copper costs more.

Q. What is Temperature Rise?

A. It is the increase over ambient temperature of the winding due to energizing and loading.