Larson Electronics LLC
9419 E US HWY 175, Kemp, TX 75143
Phone: 800.369.6671

www.LarsonElectronics.com
Email: sales@LarsonElectronics.com
Fax: 903.498.3364

XLE-PA-IP67-309.NA-3PH-100A-480V-3P4W-B

IEC 60309 Waterproof Inlet, 100 Amps 3P+E, 480V 3PH 3P4W, Pin & Sleeve, IP67

Product ID: 263634



Larson Electronics LLC manufactures a wide variety of products, including custom built to spec designs. The pictures displayed for this unit are a general representation of form factor for the product line and may not accurately represent this exact configuration in every detail due to custom builds and changes between similar products in our standard catalog. The specifics for this configuration are listed in the specification table and supporting documentation (CAD files, Dimensional Drawing, Name Plate Diagram, Wiring Diagram, etc.). This means that specific details (receptacles, plugs, wires, connections, mounting brackets, external finishes, etc.) may not be accurately represented in images vs specifications. Please review specifications and do not order based solely on images.

XLE-PA-IP67-309.NA-3PH-100A-480V-3P4W-B Water Tight Pin and Sleeve Connector

Device Series: IEC 60309 (North American Standard)
Device Type: Inlet
Dimensions: -
Weight: -
Amperage Rating: 100A
Voltage: 480
Frequency: 50/60 Hz
Phase: 3-Phase Delta
Configuration: 3P4W (3P+N+E)
# of Poles: 3-Pole
# of Wires: 4-Wire
Max Voltage Rating: 480V 3PH
Clock Hour: 7H
Cord Range: .950 - 1.875
Dielectric Voltage: 3000V for 1 min
# of Operations: > 1000 connects/disconnects under load, at full rated current and voltage
Minimum Withdrawal Force: 20lbs
Temperature Rise: Max +30°C at full-rated current after 50 cycles of OL at 150% rated current
Operating Temperature Range: -25°C to +65°C
Waterproof Rating: IP67, IP69K, NEMA 4X
Shock Resistance: IK09
Flammability: V-2 Rated

Certifications - Compliance

Certified for United States & Canada
NRTL Certified to UL 1682, UL 1686
NRTL Certified to CAN/CSA C22.2 No 182.1
CE Certified, Low Voltage Directive 73/23/EEC
CE Certified, Low Voltage Directive 93/68/EEC
NRTL Certified to 60309-1, 60309-2
RoHS Certified
Compatible with IEC 60309 Compliant Products
IP67/IP69K Rated Weatherproof
IK07 Rated Drop Resistant
Flame Retardant (UL94 V2)
Certified for Full Load Interrupting
Current Interrupting: Certified for current interrupting at full rated current
Corrosion Resistance: Ferrous parts immersed in 20°C, 10 percent ammonium chloride solution for 10 min
Flammability: Rated V-2 per UL 94
Ingress Protection Rating: IP67/IP69K
Moisture Resistance: Immersed for 24 hours in 5cm of 25°C water per UL 1682
Crush Test: 250lbs for 1 min after -25°C for 6 hrs
Impact Resistance: Drop from 30" 8 times after conditioning to -25°C for 6 hrs
Cross Compatible: 4100B7W
Mating Plug: XLE-PA-IP67-309.NA-3PH-100A-480V-3P4W-P
Mating Receptacle: XLE-PA-IP67-309.NA-3PH-100A-480V-3P4W-R

Insulation Resistance: 500V for 1 min; >= 5M

Cable Secureness: "Force: 150lb; Torque: 2.0 ft-lb; Max Disp: <= 3/32""

Seals: Neoprene
Material, Housing Body: Toughened PVC
Material, Housing Cover: Toughened PVC
Material, Contacts: Brass
Material, Contact Carrier: Nylon
Material, External Screws: Acid-Proof Stainless Steel
Material, Internal Screws: Zinc-plated steel
Material, Phase/Ground Sleeves: Brass
Material, Sleeve Spring: Stainless Steel
Material, Terminal Screws: Steel
Color: Red
Shipping Dimensions: -
Shipping Weight: -

Mating Connector: XLE-PA-IP67-309.NA-3PH-100A-480V-3P4W-C
Mating Inlet: XLE-PA-IP67-309.NA-3PH-100A-480V-3P4W-B

Special Orders - Special Requirements
Contact us for special requirements
Toll Free: 1-800-369-6671
Intl: 1-903-270-1187
Fax: 1-903-498-3364
E-mail: sales@larsonelectronics.com

The Larson Electronics XLE-PA-IP67-309.NA-3PH-100A-480V-3P4W-B is an IEC 60309 standard industrial use waterproof Inlet for industrial work sites. The 100-amp pin/sleeve Inlet is configured to operate on 3-Phase Delta 480V AC power and features an IP67 waterproof rating. Designed for rugged facilities, the %Pole%-pole %Wire%-wire unit can be disconnected under load up to 1000? times.

The XLE-PA-IP67-309.NA-3PH-100A-480V-3P4W-B is an industrial grade Inlet with waterproof properties. This pin/sleeve unit is compatible with 3-Phase Delta 480V and holds a 100-amp rating. The IP67-rated Inlet is constructed of toughened PVC, reinforced thermoplastic polyester and stainless steel.

The XLE-PA-IP67-309.NA series from Larson Electronics complies with the IEC 60309 standard for North American equipment, is a direct cross for 4100B7W , and is cross compatible with other equipment designed to the same standard. The XLE-PA-IP67-309.NA-3PH-100A-480V-3P4W-B is a Red Inlet with a grounding pin located at clock hour 7.

At Larson Electronics, we do more than meet your lighting needs. We also provide replacement, retrofit, and upgrade parts as well as industrial grade power accessories. Our craftsmen can custom build any lighting system and/or accessories to fit the unique demands of your operation. A commitment to honesty, quality, and dependability has made Larson Electronics a leader in the lighting and electronics business since 1973. Contact us today at 800-369-6671 or message sales@larsonelectronics.com for more information about our custom options tailored to meet your specific industry needs.

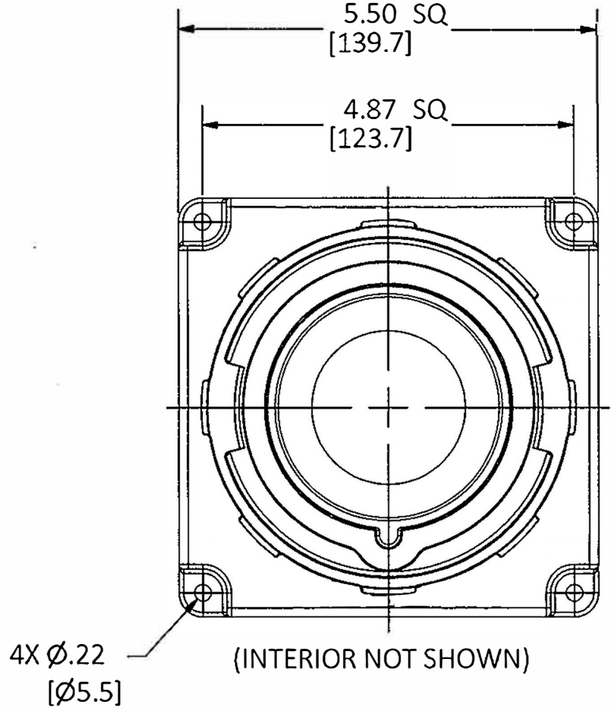

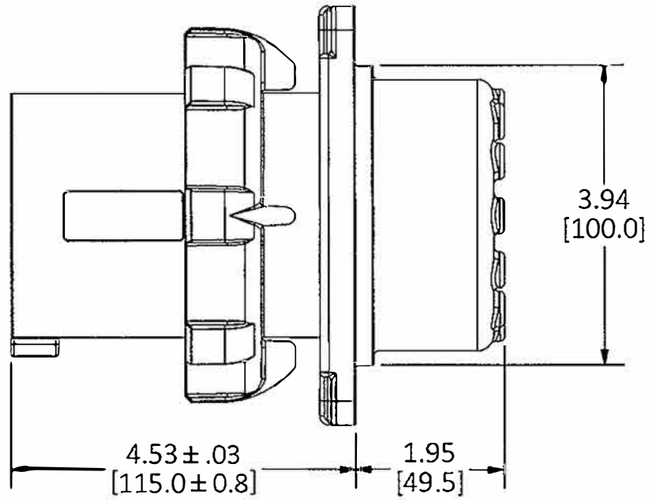

LIST OF PARTS		
DESCRIPTION	MATERIAL	FINISH
HOUSING	PBT	
GASKET	RUBBER	
LOCKING RING	PBT	
INTERIOR	THERMOSET	
PINS	BRASS	
TERM. SCREWS	ST. STEEL	
GLAND CAP	PBT	
GLANDS	RUBBER	
CLAMPS	PBT	
CLAMP NUTS	BRASS	NICKEL
ASSY SCREWS	ST. STEEL	

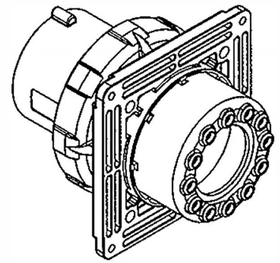

DIMENSION SHEET FOR CAT. NO.

SEE TABLE

CONFIG.	RATING	HOUSING COLOR	PILOT
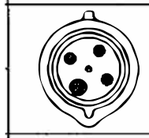	100A 600VAC 3Ø	BLACK	NO
	100A 600VAC 3Ø	BLACK	YES
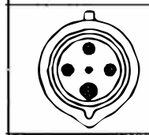	100A 380-415VAC 3Ø 125A - 6h/380-415V~	RED	NO
	100A 380-415VAC 3Ø 125A - 6h/380-415V~	RED	YES
	100A 480VAC 3Ø	RED	NO
	100A 480VAC 3Ø	RED	YES
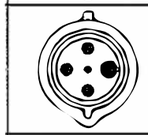	100A 250VAC 3Ø 125A - 9h/200-250V~	BLUE	NO
	100A 250VAC 3Ø 125A - 9h/200-250V~	BLUE	YES
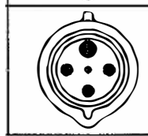	100A 125/250VAC	ORANGE	NO
	100A 125/250VAC	ORANGE	YES

LARSON ELECTRONICS®

REV	DESCRIPTION	APP	DATE
1		TLS	3/10/16

THE DESIGN AND DIMENSIONS OF THE PRODUCT SHOWN ON THIS DRAWING ARE SUBJECT TO CHANGE WITHOUT NOTICE. DIMENSIONS ARE IN INCHES [mm].

TITLE

100A & 125A 3 POLE 4 WIRE PIN AND SLEEVE INLET

XLE-PA-IP67-309.NA-3PH-100A-480V-3P4W-B

TOLERANCES UNLESS OTHERWISE SPECIFIED
.XX = ± .01
.XXX= ± .005
ANGLE TOL. ±2°

SCALE 1:2

DATE 3/2/16

M-1

1

Frequently Asked Questions (FAQ)