Larson Electronics LLC
9419 E US HWY 175, Kemp, TX 75143
Phone: 800.369.6671

www.LarsonElectronics.com
Email: sales@LarsonElectronics.com
Fax: 903.498.3364

CGB-A2F-SS-32-1IN

Explosion Proof Cable Gland - Stainless Steel - Unarmored/Braided - ATEX Rated, IP68 - 1" NPT

Product ID: 261156

Larson Electronics LLC manufactures a wide variety of products, including custom built to spec designs. The pictures displayed for this unit are a general representation of form factor for the product line and may not accurately represent this exact configuration in every detail due to custom builds and changes between similar products in our standard catalog. The specifics for this configuration are listed in the specification table and supporting documentation (CAD files, Dimensional Drawing, Name Plate Diagram, Wiring Diagram, etc.). This means that specific details (receptacles, plugs, wires, connections, mounting brackets, external finishes, etc.) may not be accurately represented in images vs specifications. Please review specifications and do not order based solely on images.

CGB-A2F-SS-32-1IN Cable Gland
Listing: NRTL Listed for International Locations, ATEX/IECEx Rated
Unit Type: Explosion Proof Cable Gland
Weight: 1.90 oz
Cable: Unarmored, Braided
Entry Thread (Hub): 1" NPT
Minimum Thread Length: 0.783"
Cable Diameter: 0.125" (Min) to 0.342" (Max)
Across Flats: 0.944" (Max)
Across Corners: 1.04" (Max)
Nominal Protrusion Length: 0.826"
Operating Temp: -60°C to +130°C
Materials: Stainless Steel, Aluminum, Thermoplastic Elastomer (Seal)

Ratings
Zone 1, 2, 21, 22
ATEX Certified
IECEx, CSA Approved
INMETRO Approved
GOST R, GOST K Certified
Lloyds, DNV, ABS Approved
Rok, GGTN Permitted
IP66/IP67/IP68

Special Orders - Special Requirements
Contact us for special requirements
Toll Free: 1-800-369-6671
Intl: 1-214-616-6180
Fax: 1-903-498-3364
E-mail: sales@larsonelectronics.com

The Larson Electronics CGB-A2F-SS-32-1IN Explosion Proof Cable Gland provides secure and safe cable connections in combustible facilities. This unarmored, braided cable gland is constructed of stainless steel and caters to standard 1" NPT hubs for connection. The CGB-A2F-SS-32-1IN is a heavy duty cable gland for flammable and rugged environments. This unarmored, braided unit features a standard entry thread of 1" NPT and a minimum/maximum cable diameter of 0.125"/0.783". The ATEX-rated cable gland is constructed of stainless steel and aluminum. A thermoplastic elastomer is used to seal the unit. The accessory is waterproof (IP66-IP68) and designed for use in environments ranging between -60°C to +130°C.**Applications:** Mechanical cable retention, cable connections, cable fittings, explosive work sites, hazardous locations,

instrumentation, telecommunication, cable management and more.At Larson Electronics, we do more than meet your lighting needs. We also provide replacement, retrofit, and upgrade parts as well as industrial grade power accessories. Our craftsmen can custom build any lighting system and/or accessories to fit the unique demands of your operation. A commitment to honesty, quality, and dependability has made Larson Electronics a leader in the lighting and electronics business since 1973. Contact us today at 800-369-6671 or message sales@larsonelectronics.com for more information about our custom options tailored to meet your specific industry needs.

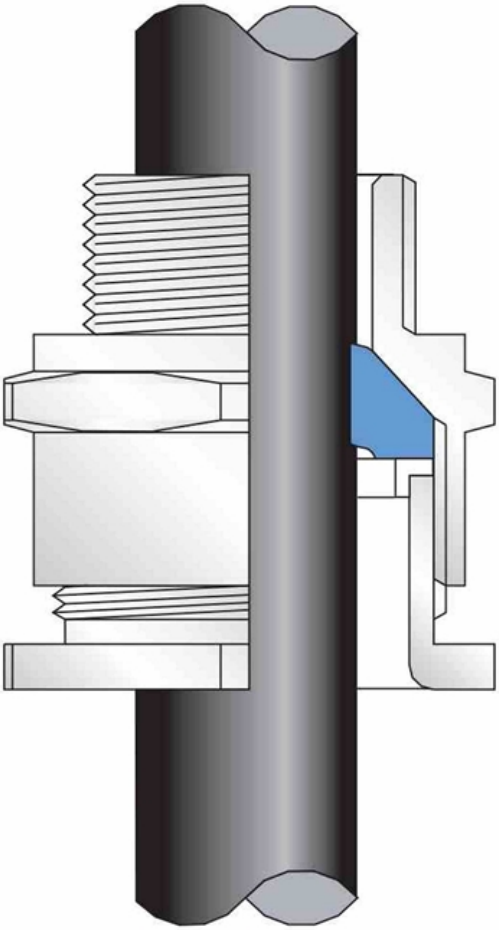

Certificate of Conformity

Manufacturer: Larson Electronics LLC
Address: 9419 US-HWY 175
Kemp, Texas 75143

Declare the following equipment conforms to the standard(s) as listed:

Model: CGB-A2F
Description: Explosion Proof Cable Gland

Evaluated Listings:

UL: E201187 E253914 – NEC / United States standards
UL: E201187 – CEC / Canada standards
CSA: 2288626 – NEC / United States standards and CEC / Canada standards
ABS: 14-LD234401A-4-PDA – United States Marine standards
CML: 18ATEX1325X, 18ATEX4317X **–** ATEX standards
CML: IECEx CML 18.0182X – IEC Ex standards
Sira: 10Y9148U – IEC Ex standards
Sira: 10Y9147U – British standards
Sira: 10Y9147U – ATEX standards and IEC Ex standards
LR: 01/00172(E2) – IEC Ex standards, IEC Ex Marine standards
DNV: TAE00000Y – IEC Ex standards, IEC Ex Marine standards
TUV: TÜV 12.2073 X – INMETRO (Brazil) standards
RETIE: 03866 – Columbian EX standards
EAC: RU C-GB.AA87.B.00487 – Russian EX standards
UkrSEPRO: CU 19.0371X – Ukrainian EX standards
KCC: 14-GA4BO-0252X – Korean EX standards
CCOE / PESO: P444949 – Indian EX standards

The CGB-A2F Series is certified to NEC, CEC, ATEX, and IEC Ex standards for hazardous locations.

The CGB-A2F Series is comprised of a CMP A2F series device. This assembly is built to NEC, CEC, ATEX, and IEC standards for hazardous locations.

Signed for and on behalf of: Larson Electronics, LLC
Place of issue: Kemp, TX

Signature: James Thomas

Name: James Thomas
Position: Operations Manager

Material Safety Data Sheet

To Whom It May Concern,

Larson Electronics LLC CGB industrial line of cable glands and cord grips for hazardous locations are considered "ARTICLES" under 29 CFR 1910-1200, the OSHA Hazard Communication Standard, and do not require a Material Safety Data Sheet (MSDS).

Articles are specifically exempt from the regulations of this standard. OSHA defines an article as follows:

1910-1200(c) – Article means a manufactured item other than a fluid or particle:

i. Which is formed to a specific shape or design during manufacture;
ii. Which has end use function(s) dependent in whole or in part upon its shape or design during end use; and
iii. Which under normal conditions does not release more than very small quantities.

The "hazardous location" and "explosion proof" are terminology for the environment where these products will be installed. This is not to be confused with "hazardous materials;" this product does not contain any hazardous materials.

Regards,

Ray Smith

Ray Smith
Larson Electronics, LLC.

LARSON ELECTRONICS LLC • 9419 E US HWY 175 • KEMP, TX 75143
p: 1-800-369-6671 • intl: 903-498-3363 • f: 903-498-3364 • sales@larsonelectronics.com

CERTIFICATE OF COMPLIANCE

Certificate Number	20121003-E253914
Report Reference	E253914-20050328
Issue Date	2012-OCTOBER-03
Issued to:	CMP PRODUCTS GLASSHOUSE ST ST PETERS, NEWCASTLE-UPON-TYNE NE6 1BS UNITED KINGDOM
This is to certify that representative samples of	CONDUIT FITTINGS FOR USE IN ZONE CLASSIFIED HAZARDOUS LOCATIONS See Addendum Page
	Have been investigated by UL in accordance with the Standard(s) indicated on this Certificate.
Standard(s) for Safety:	UL 2225, Cables and Cable-Fittings for Use in Hazardous (Classified) Locations UL 514B, Conduit, Tubing and Cable Fittings UL 60079-0, Electrical Apparatus for Explosive Gas Atmospheres - Part 0: General Requirements UL 60079-7, Electrical Apparatus for Explosive Gas Atmospheres - Part 7: Increased Safety "e"
Additional Information:	See the UL Online Certifications Directory at www.ul.com/database for additional information

Only those products bearing the UL Listing Mark should be considered as being covered by UL's Listing and Follow-Up Service.

The UL Listing Mark generally includes the following elements: the symbol UL in a circle: with the word “LISTED”; a control number (may be alphanumeric) assigned by UL; and the product category name (product identifier) as indicated in the appropriate UL Directory.

Look for the UL Listing Mark on the product.

William R. Carney

William R. Carney, Director, North American Certification Programs

UL LLC

Any information and documentation involving UL Mark services are provided on behalf of UL LLC (UL) or any authorized licensee of UL. For questions, please contact a local UL Customer Service Representative at www.ul.com/contactus

CERTIFICATE OF COMPLIANCE

Certificate Number	20121003-E253914
Report Reference	E253914-20050328
Issue Date	2012-OCTOBER-03

This is to certify that representative samples of the product as specified on this certificate were tested according to the current UL requirements.

Series PXSS2K Cord fittings for use only with Listed Extra-hard usage cords. For vertical or horizontal mounting in Zone 1 hazardous locations. For use only with manufacturer's “Denso” Type 2122 sealing compound.

Class I, Zone 1, AEx d IIC and AEx e II hazardous locations when provided with NPT or a minimum 10 full ISO metric threads.

William R. Carney

William R. Carney, Director, North American Certification Programs

UL LLC

Any information and documentation involving UL Mark services are provided on behalf of UL LLC (UL) or any authorized licensee of UL. For questions, please contact a local UL Customer Service Representative at www.ul.com/contactus

CERTIFICATE OF COMPLIANCE

Certificate Number	20120925-E201187B
Report Reference	E201187-19990430
Issue Date	2012-SEPTEMBER-25
Issued to:	CMP PRODUCTS GLASSHOUSE ST ST PETERS, NEWCASTLE-UPON-TYNE NE6 1BS UNITED KINGDOM
This is to certify that representative samples of	MARINE SHIPBOARD CABLE SEALING FITTINGS FOR USE IN HAZARDOUS LOCATIONS MARINE SHIPBOARD CABLE FITTINGS FOR USE IN ZONE CLASSIFIED HAZARDOUS LOCATIONS Marine Shipboard cable, Series PXSS2K Have been investigated by UL in accordance with the Standard(s) indicated on this Certificate.
Standard(s) for Safety:	UL 2225, Standard for Cables and Cable Fittings for Use in Hazardous (Classified) Locations CSA-C22.2 No. 174, Standard for Cables and Cable Glands for Use in Hazardous Locations
Additional Information:	See the UL Online Certifications Directory at www.ul.com/database for additional information

Only those products bearing the UL Listing Mark for the US and Canada should be considered as being covered by UL's Listing and Follow-Up Service meeting the appropriate requirements for US and Canada.
The UL Listing Mark for the US and Canada generally includes: the UL in a circle symbol with “C” and “US” identifiers: c UL us the word “LISTED”; a control number (may be alphanumeric) assigned by UL; and the product category name (product identifier) as indicated in the appropriate UL Directory.

Look for the UL Listing Mark on the product.

William R. Carney

William R. Carney, Director, North American Certification Programs

UL LLC

Any information and documentation involving UL Mark services are provided on behalf of UL LLC (UL) or any authorized licensee of UL. For questions, please contact a local UL Customer Service Representative at www.ul.com/contactus

Certificate of Compliance

Certificate: 2288626 (101909_0_000) **Master Contract:** 184585

Project: 70096183 **Date Issued:** 2016-10-06

Issued to: **CMP Products Ltd**
Glasshouse St.
St. Peters
Newcastle Upon Tyne, NE6 1BS
UNITED KINGDOM
Attention: Dave Willcock

The products listed below are eligible to bear the CSA Mark shown with adjacent indicators 'C' and 'US' for Canada and US or with adjacent indicator 'US' for US only or without either indicator for Canada only.

C US

Issued by:
Madhumathi Kulothungan
Madhumathi Kulothungan

PRODUCTS
Class I, Division 2, Groups A, B, C and D; Class II, Division 2, Groups F and G; Class III, Division 1 and 2; Type 4X; Oil Resistance II:

Class I, Zone 2, AEx nR IIC Gc

- Series PX2K or PX2KW cable glands, integrally sealed (SL) for use only with served wire armored Tray Cable Type (TC). For vertical or horizontal mounting, for use with manufacturer's Type EP2122 or Rapid Ex sealing compound, trade sizes ½ in NPT through 4 in NPT and M20 through M100 (Metric), when provided with NPT or a minimum of 8 full ISO metric threads.

- Series PXSS2K cable glands, integrally sealed (SL) for use with unarmored Tray Cable Type (TC) and unarmored Marine Shipboard Cable Type. For vertical or horizontal mounting, for use with manufacturer's Type EP2122 or Rapid Ex sealing compound, trade sizes ½ in NPT through 4 in NPT and M20 through M100 (Metric), when provided with NPT or a minimum of 8 full ISO metric threads.

Class I, Division 2, Groups A, B, C and D; Class III, Division 1 and 2; Type 4X; Oil Resistance II:
Class I, Zone 2, AEx nR IIC Gc

- Series PX2K or PX2KW cable glands, integrally sealed (SL) for use only with served wire armored Tray Cable Type (TC-ER). For vertical or horizontal mounting, for use with manufacturer's Type EP2122 or

Rapid Ex sealing compound, trade sizes ½ in NPT through 4 in NPT and M20 through M100 (Metric), when provided with NPT or a minimum of 8 full ISO metric threads.

- Series PXSS2K cable glands, integrally sealed (SL) for use with unarmored Tray Cable Type (TC-ER) and unarmored Marine Shipboard Cable Type. For vertical or horizontal mounting, for use with manufacturer's Type EP2122 or Rapid Ex sealing compound, trade sizes ½ in NPT through 4 in NPT and M20 through M100 (Metric), when provided with NPT or a minimum of 8 full ISO metric threads.

Class I, Division 1 and 2, Groups A, B, C and D; Type 4X; Oil Resistance II:
Class I, Zone1, AEx d IIC Gb, AEx e IIC Gb; Class I, Zone 2, AEx nR IIC Gc

- Series PX2K or PX2KW cable glands, integrally sealed (SL) for use only with served wire armored Tray Cable Type (TC-ER-HL). For vertical or horizontal mounting, for use with manufacturer's Type EP2122 or Rapid Ex sealing compound, trade sizes ½ in NPT through 4 in NPT and M20 through M100 (Metric), when provided with NPT or a minimum of 8 full ISO metric threads.

- Series PXSS2K cable glands, integrally sealed (SL) for use with unarmored Tray Cable Type (TC-ER-HL). For vertical or horizontal mounting, for use with manufacturer's Type EP2122 or Rapid Ex sealing compound, trade sizes ½ in NPT through 4 in NPT and M20 through M100 (Metric), when provided with NPT or a minimum of 8 full ISO metric threads.

Class I, Division 2, Groups C and D; Class II, Division 2, Groups F and G; Class III, Division 1 and 2; Type 4X; Oil Resistant II:
Class I, Zone 2, AEx nR IIC Gc

- Series PX2K or PX2KW cable glands, integrally sealed (SL) for use only with served wire armored Tray Cable Type (TC). For vertical or horizontal mounting, for use with manufacturer's Type EP2122 or Rapid Ex sealing compound, trade sizes ½ in NPT through 4 in NPT and M20 through M100 (Metric), when provided with NPT or a minimum of 5 full ISO metric threads.

- Series PXSS2K cable glands, integrally sealed (SL) for use with unarmored Tray Cable Type (TC) and unarmored Marine Shipboard Cable Type. For vertical or horizontal mounting, for use with manufacturer's Type EP2122 or Rapid Ex sealing compound, trade sizes ½ in NPT through 4 in NPT and M20 through M100 (Metric), when provided with NPT or a minimum of 5 full ISO metric threads.

Class I, Division 2, Groups C and D; Class III, Division 1 and 2; Type 4X; Oil Resistant II:
Class I, Zone 2, AEx nR IIC Gc

- Series PX2K or PX2KW cable glands, integrally sealed (SL) for use only with served wire armored Tray Cable Type (TC-ER). For vertical or horizontal mounting, for use with manufacturer's Type EP2122 or Rapid Ex sealing compound, trade sizes ½ in NPT through 4 in NPT and M20 through M100 (Metric), when provided with NPT or a minimum of 5 full ISO metric threads.

- Series PXSS2K cable glands, integrally sealed (SL) for use with unarmored Tray Cable Type (TC-ER) and unarmored Marine Shipboard Cable Type. For vertical or horizontal mounting, for use with

manufacturer's Type EP2122 or Rapid Ex sealing compound, trade sizes ½ in NPT through 4 in NPT and M20 through M100 (Metric), when provided with NPT or a minimum of 5 full ISO metric threads.

Class I, Division 1 and 2, Groups C and D; Type 4X; Oil Resistant II:
Class I, Zone 1, AEx d IIC Gb, AEx e IIC Gb; Class I, Zone 2, AEx nR IIC Gc;

- Series PX2K or PX2KW cable glands, integrally sealed (SL) for use only with served wire armored Tray Cable Type (TC-ER-HL). For vertical or horizontal mounting, for use with manufacturer's Type EP2122 or Rapid Ex sealing compound, trade sizes ½ in NPT through 4 in NPT and M20 through M100 (Metric), when provided with NPT or a minimum of 5 full ISO metric threads.

- Series PXSS2K cable glands, integrally sealed (SL) for use with unarmored Tray Cable Type (TC-ER-HL). For vertical or horizontal mounting, for use with manufacturer's Type EP2122 or Rapid Ex sealing compound, trade sizes ½ in NPT through 4 in NPT and M20 through M100 (Metric), when provided with NPT or a minimum of 5 full ISO metric threads.

Class I, Division 1 and 2, Groups A, B, C and D; Class II, Division 1 and 2, Groups E, F and G; Class III; Type 4X: Oil Resistant II:
Class I, Zone 1, AEx d IIC Gb, AEx e IIC Gb; Class I, Zone 2 AEx nR IIC Gc; Class I, Zone 20 AEx ta IIIC Da

- Series PX2KX and PX2K cable glands, integrally sealed (SL) for use with braided-armored or armored-jacketed Marine Shipboard Cable Type. For vertical or horizontal mounting, for use with manufacturer's Type EP2122 or Rapid Ex sealing compound, trade sizes ½ in NPT through 4 in NPT and M20 through M100 (Metric), when provided with NPT or a minimum of 8 full ISO metric threads.

Class I, Division 1 and 2, Groups C and D; Class II, Division 1 and 2, Groups E, F and G; Class III; Type 4X: Oil Resistant II:
Class I, Zone 1, AEx d IIC Gb, AEx e IIC Gb; Class I, Zone 2 AEx nR IIC Gc; Class I, Zone 20 AEx ta IIIC Da

- Series PX2KX and PX2K cable glands, integrally sealed (SL) for use with braided-armored or armored-jacketed Marine Shipboard Cable Type. For vertical or horizontal mounting, for use with manufacturer's Type EP2122 or Rapid Ex sealing compound, trade sizes ½ in NPT through 4 in NPT and M20 through M100 (Metric), when provided with NPT or a minimum of 5 full ISO metric threads.

Class I, Division 1 and 2, Groups A, B, C and D; Class II, Groups E, F and G; Class III; Type 4X; Oil Resistant II:
Class I, Zone 1, AEx d IIC Gb, AEx e IIC Gb; Class I, Zone 2, AEx nR II C Gc; Class I, Zone 20 AEx ta IIIC Da

- Series PXSS2K cable glands, integrally sealed (SL) for use with Extra Hard usage cord. For vertical or horizontal mounting, for use with manufacturer's Type EP2122 or Rapid Ex sealing compound, trade sizes ½ in NPT through 4 in NPT and M20 through M100 (Metric), when provided with a minimum of 5 full NPT threads or 8 full ISO metric threads.

Class I, Division 1 and 2, Groups C and D; Class II, Division 1 and 2, Groups E, F and G; Class III; Type 4X: Oil Resistant II:
Class I, Zone 1, AEx d IIC Gb, AEx e IIC Gb; Class 1, Zone 2, AEx nR IIC Gc; Class I, Zone 20 AEx ta IIIC Da

- Series PX2KX cable glands, integrally sealed (SL) for use with braided-armored or armored-jacketed Marine Shipboard Cable Type. For vertical or horizontal mounting, for use with manufacturer's Type EP2122 or RapidEx sealing compound, trade sizes ½ in NPT through 4 in NPT and M20 through M100 (Metric), when provided with 5 full NPT threads or a minimum of 8 full ISO metric threads.

Notes:

1. Cable gland connectors material may be of brass, aluminum or stainless steel.
2. Connectors with metric entry threads are only suitable for Areas Classified in ZONES unless fitted with an approved Metric to NPT thread conversion adaptor**.**
3. According to US (NEC) wiring method for the types of cables that can be used in Class I, Div. 1 and 2 and Class I, Zone 1and 2 Classified Areas, according to 60079-14 installation wiring method restrictions.
4. When used with "RapidEx" sealing compound the product Series has suffix – REX added to it. E.g. PX2KW becomes PX2KW-REX.
5. "Tray Cable" in the report could be read as TC, TC-ER, TC-ER-HL (tray cable).
6. Cord in the report could be read as, SO, SOO, SOOW listed for 'extra hard usage'.
7. Marine Shipboard cables are for use only on Marine shipboard or off shore unless they have been tested to CSA Std. 174 and or UL Std. 2225 when used in Hazard Location Classified areas. These cables must be marked with the letter HL so that its known that they have being certified for Hazloc classified areas.
8. All cable types referenced can be read as being with or without an EMI shield.
9. Refer to the report 2288626, Edition 6 for Tables that specifically lists the cable gland with cable series applicable to respective divisions and zones as per CEC and NFPA 70 standards.

CLASS 4418 05 - CABLE - Hardware - For Hazardous Locations

Class I, Division 2, Groups A, B, C and D; Class II, Division 2, Groups F and G; Class III, Division 2; Type 4X; Oil Resistant II:
Ex nR IIC Gc

- Series PX2K or PX2KW cable glands, integrally sealed (SL) for use only with served wire armored Tray Cable Type. For vertical or horizontal mounting, for use with manufacturer's Type EP2122 or Rapid Ex sealing compound, trade sizes ½ in NPT through 4 in NPT and M20 through M100 (Metric), when provided with NPT or a minimum of 8 full ISO metric threads.

- Series PXSS2K glands, integrally sealed (SL) for use with unarmored Tray Cable Type and unarmored Marine Shipboard Cable Type. For vertical or horizontal mounting, for use with manufacturer's Type EP2122 or Rapid Ex sealing compound, trade sizes ½ in NPT through 4 in NPT and M20 through M100 (Metric), when provided with NPT or a minimum of 8 full ISO metric threads.

Class I, Division 2, Groups C and D; Class II, Division 2, Groups F and G; Class III, Division 2; Type 4X; Oil Resistant II:
Ex nR IIC Gc

- Series PX2K or PX2KW cable glands, integrally sealed (SL) for use only with served wire armored Tray Cable Type. For vertical or horizontal mounting, for use with manufacturer's Type EP2122 or Rapid Ex sealing compound, trade sizes ½ in NPT through 4 in NPT and M20 through M100 (Metric), when provided with NPT or a minimum of 5 full ISO metric threads.

- Series PXSS2K cable glands, integrally sealed (SL) for use with unarmored Tray Cable Type and unarmored Marine Shipboard Cable Type. For vertical or horizontal mounting, for use with manufacturer's Type EP2122 or Rapid Ex sealing compound, trade sizes ½ in NPT through 4in NPT and M20 through M100 (Metric), when provided with NPT or a minimum of 5 full ISO metric threads.

Class I, Division 1 and 2 Groups A, B, C and D; Class II, Division 1 and 2 Groups E, F and G; Class III, Division 1 and 2; Type 4X: Oil Resistant II:
Ex d IIC Gb, Ex e IIC Gb, Ex nR IIC Gc, Ex ta IIIC Da

- Series PX2KX and PX2K cable glands, integrally sealed (SL) for use with braided-armored or armored-jacketed Marine Shipboard Cable Type. For vertical or horizontal mounting, for use with manufacturer's Type EP2122 or RapidEx sealing compound, trade sizes ½ in NPT through 4 in NPT and M20 through M100 (Metric), when provided with NPT or a minimum of 8 full ISO metric threads

Class I, Division 1 and 2 Groups C and D; Class II, Division 1 and 2 Groups E, F and G; Class III, Division 1 and 2; Type 4X: Oil Resistant II:
Ex d IIC Gb, Ex e IIC Gb, Ex nR IIC Gc, Ex ta IIIC Da

- Series PX2KX and PX2K cable glands, integrally sealed (SL) for use with braided-armored or armored-jacketed Marine Shipboard Cable Type. For vertical or horizontal mounting, for use with manufacturer's Type EP2122 or RapidEx sealing compound, trade sizes ½ in NPT through 4 in NPT and M20 through M100 (Metric), when provided with NPT or a minimum of 5 full ISO metric threads

Class I, Division 1 and 2, Groups A, B, C and D; Class II, Groups E, F and G; Class III; Type 4X; Oil Resistant II:
Ex d IIC Gb; Ex e IIC Gb, Ex nR IIC Gc, Ex ta IIIC Da

- Series PXSS2K cable glands, integrally sealed (SL) for use with Extra Hard usage cord. For vertical or horizontal mounting, for use with manufacturer's Type EP2122 or Rapid Ex sealing compound, trade sizes ½ in NPT through 4 in NPT and M20 through M100 (Metric), when provided with a minimum of 5 full NPT threads or 8 full ISO metric threads

Class I, Division 1 and 2 Groups C and D; Class II, Division 1 and 2 Groups E, F and G; Class III, Division 1 and 2; Type 4X: Oil Resistant II:
Ex d IIC Gb, Ex nR IIC Gc, Ex e IIC Gb, Ex ta IIIC Da

- Series PX2KX cable glands, integrally sealed (SL) for use with braided-armored or armored-

jacketed Marine Shipboard Cable Type. For vertical or horizontal mounting, for use with manufacturer's Type EP2122 or RapidEx sealing compound, trade sizes ½ in NPT through 4 in NPT and M20 through M100 (Metric), when provided with 5 full NPT threads or a minimum of 8 full ISO metric threads.

Notes:

1. Cable gland connectors material may be of brass, aluminum or stainless steel.
2. Connectors with metric entry threads are only suitable for Areas Classified in ZONES unless fitted with an approved Metric to NPT thread conversion adaptor**.**
3. According to C.E.C. wiring method for the types of cables that can be used in Class I, Div. 1 and 2 and Class I, Zone 1and 2 Classified Areas, according to 60079-14 installation wiring method restrictions.
4. Shipboard Cables are for use on Marine Platform and or shipboards only and are subject to local authorities having jurisdiction on the installation.
5. When used with "RapidEx" sealing compound the product Series has suffix – REX added to it. E.g. PX2KW becomes PX2KW-REX.
6. "Tray Cable" in the report could be read as TC, TC-ER, TC-ER-HL (tray cable).
7. Marine Shipboard cables are for use only on Marine shipboard or off shore unless they have being tested to CSA Std. 174 and or UL Std. 2225 when used in Hazard Location Classified areas. These cables must be marked with the letter HL so that its known that they have being certified for Hazloc classified areas.
8. All cable types referenced can be read as being with or without an EMI shield
9. Refer to the report 2288626, Edition 6 for Tables that specifically lists the cable gland with cable series applicable to respective divisions and zones as per CEC and NFPA 70 standards.

APPLICABLE REQUIREMENTS

CAN/CSA-C22.2 No 0-M91	-	General Requirements
CAN/CSA-C22.2 No 18-04	-	Outlet Boxes, Conduit Boxes, and Fittings
CAN/CSA-C22.2 No 25-1966	-	Enclosures for Use in Class II, Groups E, F and G Hazardous Locations
CAN/CSA-C22.2 No 30-M1986-		Explosion Proof Enclosure for use in Class I Hazardous Locations – Industrial Products
CAN/CSA-C22.2 No.174-M1984	-	Cables and Cable Glands for Use in Hazardous Locations
CAN/CSA-C22.2 No.94-M91	-	Special Purpose Enclosures
CSA C22.2 No 60079-0-11	-	Explosive atmospheres — Part 0: Equipment — General requirements - Second Edition
CSA C22.2 NO 60079-7-12	-	Explosive atmospheres — Part 7: Equipment protection by increased safety “e” - First Edition
CSA C22.2 NO 60079-1-11	-	Explosive atmospheres — Part 1: Equipment protection by flameproof enclosures “d” - Second Edition
CSA C22.2 No 60079-15-12	-	Electrical apparatus for explosive gas atmospheres — Part 15: Construction, test and marking of type of protection "n" electrical apparatus - First Edition
CSA C22.2 No 60079-31-12	-	Explosive atmospheres -Part 31: Equipment dust ignition protection by enclosure “t”.
ANSI/UL 514B Edition 5	-	Conduit, Tubing, and Cable Fittings
ANSI/UL 50 Edition 11	-	Enclosures for Electrical Equipment
ANSI/UL 2225 Edition 4	-	Cables and Cable Fittings For Use in Hazardous (Classified) Locations
ANSI/ISA 60079-31 (12.10.03)-2013	-	Explosive atmospheres - Part 31: Equipment dust ignition protection by enclosure “t”.
CAN/CSA-E61241-1-1	-	Electrical Apparatus for for the presence of combustible dust – Part 1-1
UL60079-0:09	-	Electrical Apparatus for Explosive Gas Atmospheres – Part 0 -
UL60079-7:08	-	Electrical Apparatus for Explosive Gas Atmospheres – Part 7 – Increase Safety “e”
UL60079-1:09	-	Electrical Apparatus for Explosive Gas Atmospheres – Part 1 – Flameproof
UL60079-15:13	-	UL Standard for Safety Explosive atmospheres – Part 15: Equipment protection by type of protection "n" - Fourth Edition

CERTIFICATE OF COMPLIANCE

Certificate Number	20120925-E201187B
Report Reference	E201187-19990430
Issue Date	2012-SEPTEMBER-25
Issued to:	CMP PRODUCTS GLASSHOUSE ST ST PETERS, NEWCASTLE-UPON-TYNE NE6 1BS UNITED KINGDOM
This is to certify that representative samples of	MARINE SHIPBOARD CABLE SEALING FITTINGS FOR USE IN HAZARDOUS LOCATIONS MARINE SHIPBOARD CABLE FITTINGS FOR USE IN ZONE CLASSIFIED HAZARDOUS LOCATIONS Marine Shipboard cable, Series PXSS2K Have been investigated by UL in accordance with the Standard(s) indicated on this Certificate.
Standard(s) for Safety:	UL 2225, Standard for Cables and Cable Fittings for Use in Hazardous (Classified) Locations CSA-C22.2 No. 174, Standard for Cables and Cable Glands for Use in Hazardous Locations
Additional Information:	See the UL Online Certifications Directory at www.ul.com/database for additional information

Only those products bearing the UL Listing Mark for the US and Canada should be considered as being covered by UL's Listing and Follow-Up Service meeting the appropriate requirements for US and Canada.
The UL Listing Mark for the US and Canada generally includes: the UL in a circle symbol with “C” and “US” identifiers: c UL us the word “LISTED”; a control number (may be alphanumeric) assigned by UL; and the product category name (product identifier) as indicated in the appropriate UL Directory.

Look for the UL Listing Mark on the product.

William R. Carney

William R. Carney, Director, North American Certification Programs

UL LLC

Any information and documentation involving UL Mark services are provided on behalf of UL LLC (UL) or any authorized licensee of UL. For questions, please contact a local UL Customer Service Representative at www.ul.com/contactus

Certification

Manufacturer: Larson Electronics LLC
Address: 9419 US-HWY 175
Kemp, Texas 75143

Declare the following equipment conforms to the standard(s) as listed:

Model: CGB-A2F
Description: Explosion Proof Cable Gland

Evaluated Listings:

CE: DIRECTIVE 2014/35/EU - LOW VOLTAGE DIRECTIVE
CE: DIRECTIVE 2014/30/EU - EMC DIRECTIVE
CE: Regulation (EC) No 1907/2006 - REACH REGULATION
CE: DIRECTIVE 2015/863/EU - ROHS DIRECTIVE

The CGB-A2F Series complies with the essential protection requirements of the European Parliament of the Council Directive for Low Voltage Directive, EMC Directive, REACH Regulation, and RoHS Directive. This certification applies to all specimens manufactured in accordance to the manufacture's drawings.

Signed for and on behalf of: Larson Electronics, LLC
Place of issue: Kemp, TX

Signature: James Thomas

Name: James Thomas
Position: Operations Manager

Certification

Manufacturer: Larson Electronics LLC
Address: 9419 US-HWY 175
Kemp, Texas 75143

Declare the following equipment conforms to the standard(s) as listed:

Model: CGB-A2F
Description: Explosion Proof Cable Gland

Evaluated Listings:

CE: DIRECTIVE 2015/863/EU - ROHS DIRECTIVE

This is to certify that products offered by Larson Electronics LLC comply with the Reduction of Hazardous Substances (RoHS) directives. Directive 2002/95/EC became effective on 1 July 2006. It restricts the use of six substances in the manufacture of electrical and electronic equipment. This directive was revised in June 2011 and is now referred to as directive 2011/65/EU. Directive 2015/863/EU amending Annex II to Directive 2011/65/EU announced plans to add four substances from 22 July 2019.

We hereby certify that the equipment specified above conforms to the Directive(s) by containing less of the restricted substances than the stated limits.

Signed for and on behalf of: Larson Electronics, LLC
Place of issue: Kemp, TX

Signature: James Thomas

Name: James Thomas
Position: Operations Manager

Certification

Manufacturer: Larson Electronics LLC
Address: 9419 US-HWY 175
Kemp, Texas 75143

Declare the following equipment conforms to the standard(s) as listed:

Model: CGB-A2F
Description: Explosion Proof Cable Gland

Evaluated Listings:

CE: Regulation (EC) No 1907/2006 - REACH REGULATION

This letter establishes the opinion of Larson Electronics LLC regarding the status, under the current European Union ("EU") Regulations on Registration, Evaluation, Authorization, and Restriction of Chemical Substances ("REACH").

REACH does not apply to manufactured products which are referred to as "completed articles". Substances (chemicals) are subject to REACH registration, NOT products.

In addition, Articles are exempt from the REACH requirements if (a) the Article does not contain a substance of very high concern or candidate substance in an amount exceeding 0.1% weight by weight, and (b) if substances present in the Article in excess of 1 ton per year per importer are not expected nor intended to be released.

Based on communication with our raw material suppliers, we conclude that to the best of our knowledge our products requiring REACH compliance do not contain any of the currently listed SVHC in concentrations of 0.1% or above.

Accordingly, we foresee no registration or pre-registration requirement for the products we supply.

Signed for and on behalf of: Larson Electronics, LLC
Place of issue: Kemp, TX

Signature: James Thomas

Name: James Thomas
Position: Operations Manager

Frequently Asked Questions (FAQ)