Larson Electronics LLC
9419 E US HWY 175, Kemp, TX 75143
Phone: 800.369.6671

www.LarsonElectronics.com
Email: sales@LarsonElectronics.com
Fax: 903.498.3364

MMP-DC-RAM-2019-1500-LED

2019 Dodge Ram 1500 No-Drill Rooftop Mounting Bracket - 24" x 8" LED 3rd Brake Light Magnetic Plate

Product ID: 257926

Larson Electronics LLC manufactures a wide variety of products, including custom built to spec designs. The pictures displayed for this unit are a general representation of form factor for the product line and may not accurately represent this exact configuration in every detail due to custom builds and changes between similar products in our standard catalog. The specifics for this configuration are listed in the specification table and supporting documentation (CAD files, Dimensional Drawing, Name Plate Diagram, Wiring Diagram, etc.). This means that specific details (receptacles, plugs, wires, connections, mounting brackets, external finishes, etc.) may not be accurately represented in images vs specifications. Please review specifications and do not order based solely on images.

MMP-DC-RAM-2019-1500-LED Magnetic Mounting Plate for Spotlights

Type: Magnetic Mounting Plate
Compatible Truck Models: 2019 Dodge Ram 1500 Standard body trucks with LED 3rd brake light lights
Compatible 3rd Brake Light: LED
Unit Weight: 8 lbs
Unit Dimensions: 24"W x 8.53"D x 4.49"H
Mounting Platform Dimensions: 24" x 8"
Bracket Height Above Cab: 1.5"
Weight Capacity: 30 lbs
Wind-load: Highway speeds
Frame Material: Aluminum
Bracket Material: Aluminum
Mounting Plate Material: Steel
Finish: Powder Coated
Color: White, Grey, or Black
Compatible Equipment: Any Magnetic Mount Equipment of up to 30 lbs
Installation: Via 3rd Brake Light (Rear Cab Light) - hardware included
Weatherproof Seal: Foam Gasket Between Vehicle & Bracket
Shipping Weight: 15 lbs
Shipping Dimensions: 30"L x 20"W x 10"H

Ratings/Features:

Made in the USA
CNC Machined for Precision Fitment
Aluminum Bracket w/ Steel Top Plate
No Modifications Required - OEM Fitment
Works with Any Magnetic Mount Light
Durable Construction
Aerodynamic Engineered for Highway Speeds
No Rattle or Whistle While Driving
Car-wash Safe - Includes Weatherproof Seal

Special Orders - Special Requirements

Contact us for special requirements
Toll Free: 1-800-369-6671
Intl: 1-903-270-1187
Fax: 1-903-498-3364
E-mail: sales@larsonelectronics.com

PLEASE NOTE: BEFORE CALLING TO ORDER, YOU WILL NEED TO KNOW YOUR VEHICLE'S YEAR, MAKE, MODEL, TRIM PACKAGE, AND IF YOUR VEHICLE HAS AN INCANDESCENT OR LED THIRD BRAKE LIGHT. THERE IS NOTHING WE CAN LOOK UP TO HELP YOU DETERMINE THIS. YOU NEED TO LOOK AT THE LIGHT AND SEE IF THERE ARE LITTLE ROUND BULBS (INCANDESCENT) OR LITTLE SQUARE LED CHIPS. WE CANNOT FINISH YOUR ORDER WITHOUT THIS INFORMATION. VERIFY LAMP TYPE BEFORE CALLING.

Images and graphics displayed in the body of this description are for example purposes only and may not directly reflect the equipment found on your truck. As each vehicle has slightly different equipment, these images were designed for illustration purposes only to display the functionality of the product. They do not represent all models of plates, hole designs, and form factors for the vehicle mounting plates offered by Larson Electronics. Please review the product high res images, instruction manual, and dimensional drawing for accurate

description of what you are buying. ALWAYS confirm the Year, Make, Model, Trim, lamp type, and if you have a bed camera prior to ordering.

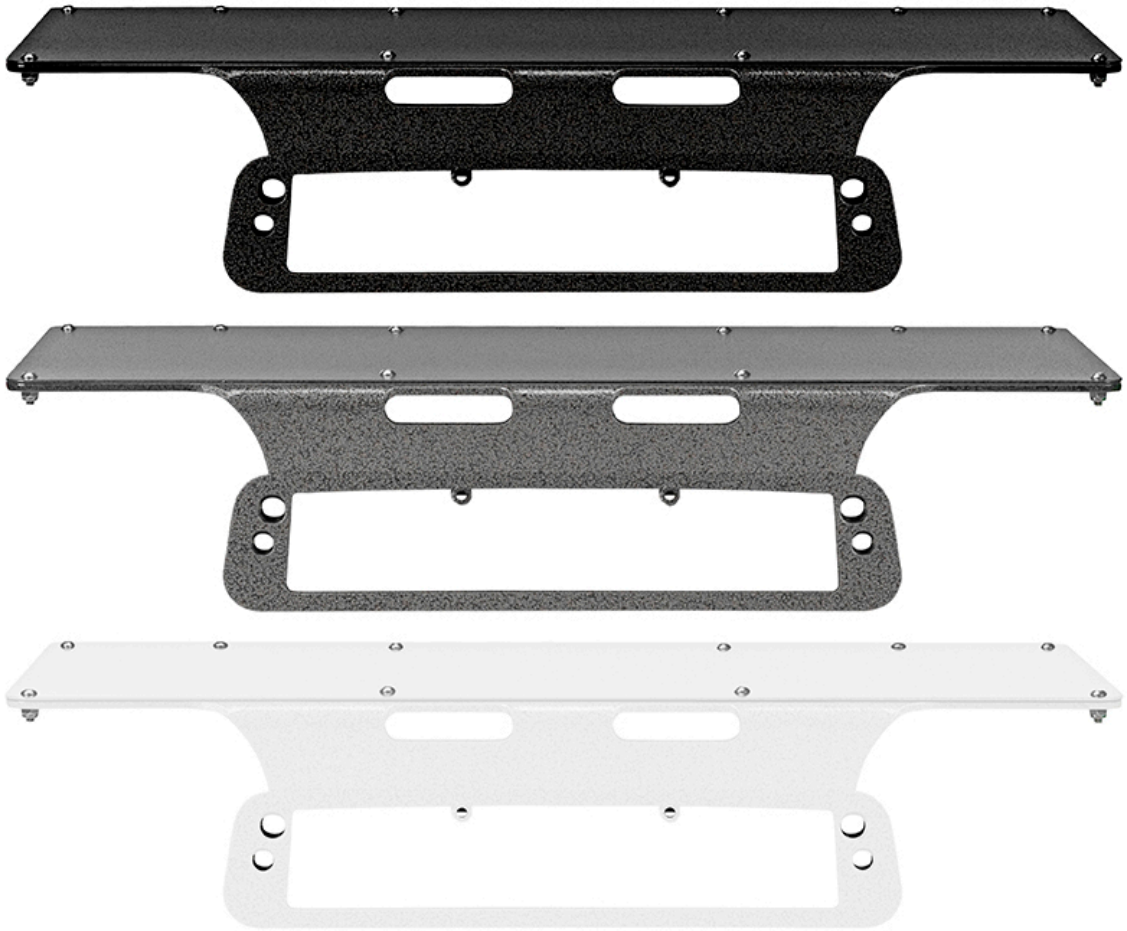

MMP-XX-V1-PB-NOCAM-GRY
LARSON
ELECTRONICS
A27
MISTER

Material Safety Data Sheet

To Whom It May Concern,

Larson Electronics LLC industrial line of vehicle mounting plates are considered "ARTICLES" under 29 CFR 1910-1200, the OSHA Hazard Communication Standard, and do not require a Material Safety Data Sheet (MSDS).

Articles are specifically exempt from the regulations of this standard. OSHA defines an article as follows:

1910-1200(c) – Article means a manufactured item other than a fluid or particle:

i. Which is formed to a specific shape or design during manufacture;
ii. Which has end use function(s) dependent in whole or in part upon its shape or design during end use; and
iii. Which under normal conditions does not release more than very small quantities.

Regards,

Ray Smith

Ray Smith
Larson Electronics, LLC.

LARSON ELECTRONICS LLC • 9419 E US HWY 175 • KEMP, TX 75143
p: 1-800-369-6671 • intl: 903-498-3363 • f: 903-498-3364 • sales@larsonelectronics.com

Frequently Asked Questions (FAQ)