Larson Electronics LLC
9419 E US HWY 175, Kemp, TX 75143
Phone: 800.369.6671

www.LarsonElectronics.com
Email: sales@LarsonElectronics.com
Fax: 903.765.7664

EPL-TP.S-50LED-RT-195C

50W Explosion Proof LED Tripod Light - 3.5ft to 10ft - 7,000 lms - 195' Cord w/ Cord Cap

Product ID: 243105

Image: EPL-TP.S-50LED-RT-195C

Larson Electronics LLC manufactures a wide variety of products, including custom built to spec designs. The pictures displayed for this unit are a general representation of form factor for the product line and may not accurately represent this exact configuration in every detail due to custom builds and changes between similar products in our standard catalog. The specifics for this configuration are listed in the specification table and supporting documentation (CAD files, Dimensional Drawing, Name Plate Diagram, Wiring Diagram, etc.). This means that specific details (receptacles, plugs, wires, connections, mounting brackets, external finishes, etc.) may not be accurately represented in images vs specifications. Please review specifications and do not order based solely on images.

EPL-TP.S-50LED-RT-195C - Explosion Proof LED Tripod Light

Listing: NRTL Listed for United States, Canada
Lamp Technology: LED
Tripod Dimensions: 3.5' to 10'
Weight: 33 lbs
Voltage: 100-277V AC
Total Watts: 50W
Total Lumens: 7,000 lms
Luminous Efficacy: 140 Lm/w
Lamp Life: 60,000+ Hours
Color Temp: 5600K, 5000K, 4500K, 4000K, 3500K, or 3000K
Color Rendering Index: >75 CRI
Beam Angle: 60°, 125°, 140°
Lighting Configuration: Flood Pattern
Power Efficiency: >95%
Power Factor: 0.99
Amps: 0.42A @ 120V, 0.21A @ 240V, 0.18A @ 277V
Ambient Operating Temp Range: -50° C to +65°C
Operating Temp Rating: T5
Temperature Rise: 11°C (10°F) Over Ambient
Housing Material: Copper Free Cast Aluminum
Housing Finish: Epoxy Powder Coated - Grey
Lens Material: Hardened Borosilicate Glass
Gasket Material: Silicone
Mounting: Adjustable Trunnion and Aluminum Tripod

Ratings/Approvals

Class I, Divisions 1 & 2, Groups C and D
Class II, Divisions 1 & 2, Groups E, F and G
Class III, Divisions 1 & 2
T5 Temperature Rating
Paint Spray Booth Approved
IEC 60529 Tested
IP67 Rated Waterproof
LEL Approved
Single LED Driver
80% Lumen Retention after 60,000 Hours
Factory Sealed Light Fixture
Surge Protection
Replacement for 250W Metal Halide Lamps

Special Orders - Special Requirements

Contact us for special requirements
Toll Free: 1-800-369-6671
Intl:

Wiring: 195' 16/3 SOOW Cord w/ Cord Cap
Cord Cap Options: 5-15 Straight, 6-15 Straight, L5-15 Twist, L6-15 Twist, UK BS1363, Intl. Schuko, Pigtail

1-903-270-1187
Fax: 1-903-765-7664
E-mail: sales@larsonelectronics.com

The Larson Electronics EPL-TP.S-50LED-RT-195C Explosion Proof LED Tripod Light provides operators with a powerful alternative to traditional hazardous location luminaries. Capable of replacing 250-watt metal halide lamps, this 50-watt LED unit emits 7,000 lumens, carries an IP67 waterproof rating and features a long lifespan of 60,000+ hours. The explosion proof LED light is secured on an adjustable trunnion bracket, equipped with a 195` cord, and mounted atop an aluminum tripod that extends from 3.5` to 10`. This portable explosion proof tripod can be shipped UPS/FedEx Next Day Air.

The EPL-TP.S-50LED-RT-195C is a Class I, Division 1 & 2 and Class II, Division 1 & 2 explosion proof light that is designed for energy efficient and superior illumination in combustible environments. Mounted on a sturdy adjustable tripod, this 50-watt LED light offers 7,000 lumens of high quality light with a standard color temperature of 5000K. We also offer a 3000K warm white and 4500K natural white color temperature options (longer lead times may apply for non-standard temperatures). Serving as a suitable replacement for 250-watt metal halide lamps, a color rendering index of 75 ensures colors and details are produced more accurately than high pressure sodium or mercury vapor luminaries.

The compact design of the EPL-TP.S-50LED-RT-195C allows this tower mounted explosion proof LED light to be shipped via standard carriers (UPS, FedEx, DHL) and can be shipped via air shipments without suffering damage. This translates to a readily available product that can be quickly shipped and delivered for last minute projects and requirements. With a complete assembly weight of 33 (including light head, cord, and tower mount combined), this is a truly portable explosion proof light without sacrificing the performance output typically seen with other small form factor explosion proof products. No more having to hassle with pallet shipments for bulky and heavy explosion proof luminaries.

This powerful lighting solution is IP67 rated, dust-proof and protected against high pressure jets and temporary submersion. The copper-free aluminum alloy housing is specially designed to dissipate heat which increases the efficiency and lifespan of the LEDs and electronic components. An epoxy powder coated finish facilitates durability and an attractive aesthetic appearance. Special heat dissipating design in conjunction with LED technology helps this fixture achieve an excellent 60,000-hour rated lifespan with 80% lumen retention. The explosion proof LED light also offers operators convenience in the form of field serviceability.

LED Benefits: Unlike gas burning and arc type lamps that have glass bulbs, LEDs have no filaments or fragile housings to break during operation and/or transportation. Instead of heating a small filament or using a combination of gases to produce light, light emitting diodes (LEDs) use semi-conductive materials that illuminate when electric current is applied, providing instant illumination with no warm up or cool down time before re-striking. Because there is no warm up period, this light can be cycled on and off with no reduction in lamp life.

LED lights run at significantly cooler temperatures than traditional metal halide and high pressure sodium lights and contain no harmful gases, vapors, or mercury, making them both safer and more energy efficient. No extra energy is wasted in cooling enclosed work areas due

to external heat emissions from bulb type lights, and the operator risks associated with traditional lighting methods, such as accidental burns and exposure to hazardous substances contained in the glass bulbs, are eliminated. In addition, LEDs are also safer for the environment as they are 100% recyclable, which eliminates the need for costly special disposal services required with traditional gas burning and arc type lamps.

Energy Consumption Comparison

	Metal Halide	LED
Wattage	250 watts	50 watts
Amp Draw @ 120V AC	2.25 amps	0.42 amps
Amp Draw @ 220V AC	1.23 amps	0.23 amps
Amp Draw @ 240V AC	1.13 amps	0.21 amps
Amp Draw @ 277V AC	0.98 amps	0.18 amps
Lamp Life Expectancy	20,000 hours	60,000+ hours
Operation cost per year (12hs/day @ 12c/kWh)	$357.84	$26.30

Each LED light fixture has the potential to save $150.00+ per year in electricity alone, not including maintenance costs, operational downtime, reduced productivity, HVAC loads, or carbon footprint. When retrofitting an entire facility with 100s of light fixtures, the return on investment of LED over metal halide becomes evident.

LED Drivers: Even in LED fixtures, heat is the single largest factor in premature light failure and color shifting. As a result, many manufacturers reduce the output of their LEDs in order to reduce the amount of heat produced. Rather than lower light output or quality, Larson Electronics addresses this problem with the addition of an electronic LED driver. This internal driver provides the ability to automatically monitor and adjust input current to maintain the correct LED voltage levels regardless of input levels across a specific range. This not only reduces the energy dissipation, effectively lowering the operating temperature of the fixture, but also prevents AC over-voltage and short circuit loading making this fixture virtually maintenance free. Because the electronic driver allows the EPL-TP.S-50LED-RT-195C to run at a cooler internal temperature and regulates the electrical current, energy efficiency and LED service hours are maximized while at the same time reducing operating costs and downtime incurred from the frequent servicing intervals required with other hotter running lights.

Voltage: This light is universal voltage capable and can be operated with 100-277V AC, 50/60Hz.

Click Photos to Enlarge

5-15 Straight Blade Plug

L5-15 Twist Lock Plug

L6-15 Twist Lock Plug

15 Amp / 125V Rated

UK BS1363 Straight Blade Plug
13 Amp / 250V Rated / Internal Fuse

15 Amp / 125V Rated

Intl Schuko 2-Pin Plug
16 Amp / 250V Rated / Grounded

15 Amp / 250V Rated

Flying Leads / Pigtail Wires

Wiring/Plug: This LED light is equipped with 195 feet of 16/3 chemical and abrasion resistant SOOW cord that is fitted with an industrial grade cord cap for easy connection to common wall outlets. Plug options include standard 5-15 15 amp straight blade plug for 110V wall outlets with ground, standard 6-15 15 amp straight blade plug for 220-240V wall outlets with ground, NEMA L5-15 15 amp twist lock plug for 125V twist lock outlets, NEMA L6-15 15 amp twist lock plug for 240V twist lock outlets, British BS1363 13 amp fused 3-blade plug for United Kingdom outlets, or a two pin 16 amp rated Schuko plug with ground contact and socket for European outlets up to 250V. Alternatively, we can provide flying leads with no plug for hard wire applications or for operators who prefer to wire in user provided cord caps. Please choose pigtail option below for flying leads with no plug.

Tripod Mount: The explosion proof LED unit is mounted to an adjustable aluminum tripod that can reach heights up to 10 feet and can be lowered to 3.5 feet for applications where a lower height is required or for storage and transportation. The LED lamp is adjustable via a trunnion bracket at the back of the lamp for precise light placement.

Suggested Applications: Paint spray booths, aircraft maintenance, oil drilling rigs, refineries, solvent and cleaning areas, chemical manufacturing, waste treatment plants, gas processing plants and more.

At Larson Electronics, we do more than meet your lighting needs. We also provide replacement, retrofit, and upgrade parts as well as industrial grade power accessories. Our craftsmen can custom build any lighting system and/or accessories to fit the unique demands of your operation. A commitment to honesty, quality, and dependability has made Larson Electronics a leader in the lighting and electronics business since 1973. Contact us today at 800-369-6671 or message sales@larsonelectronics.com for more information about our custom options tailored to meet your specific industry needs.

WIRING (see attached wiring diagram)

This unit comes preconfigured with selected voltage, beam angle, and factory wired through rear located junction box to voltage listed on nameplate.
Voltage: Check Nameplate. Connect Ground to junction box. This fixture is available in two voltage ranges: 100-277 Volts AC, 50/60Hz **or** 11-25 Volts AC/DC.

Follow all applicable NEC, local, and state electrical codes.

WARNING: CHECK NAMEPLATE FOR PROPER VOLTAGE. DAMAGE FROM IMPROPER VOLTAGE MAY

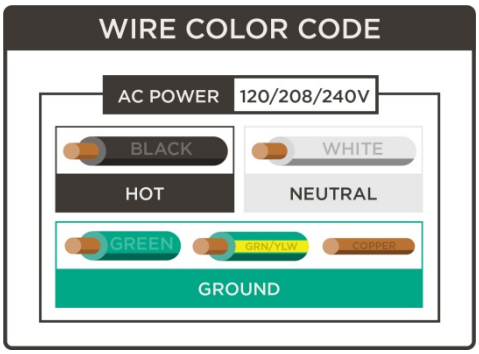

For field wiring and repairs, remove the rear located junction box. To replace the LED driver, remove the driver plate (pictured to the right). This is located between the junction box and lamp body.

MAINTENANCE

Caution: To avoid personal injury, disconnect power to the light and allow the unit to cool down before performing maintenance.

Warning: No user serviceable parts inside of fixture. Risk of electric shock. Removal of the lens will void the warranty.

1. Perform visual, mechanical and electrical inspections on a regular basis. We recommend routine checks to be made on a yearly basis. Frequency of use and environment should determine this. It is recommended to follow an Electrical Preventive Maintenance Program as described in NFPA 70B: Recommended practice for Electrical Equipment.
2. The lens should be cleaned periodically as needed to ensure continued photometric performance. Clean the lens with a damp, non-abrasive, lint-free cloth. If not sufficient, use mild soap or a liquid cleaner.
3. Inspect the cooling fins on the luminaire to ensure that they are free of any obstructions or contamination (i.e. excessive dust build-up). Clean with a non-abrasive cloth if needed.
4. Do not operate if the lens is cracked or damaged. All fasteners should be properly seated.

To replace driver, disconnect power running to fixture. Dismount fixture and remove the back cover. Disconnect bad driver and remove the single screw holding it in place. Place new driver and replace screw. Connect power cord and route wires as needed. Replace back cover plate.

WARRANTY

Should further information not covered by these instructions be required, please contact Larson Electronics at 1-800-369-6671 or sales@larsonelectronics.com for further assistance.

Please visit LarsonElectronics.com for **Warranty** and **Return** information.

Larson Electronics

TITLE:

EPL-TP.S-50LED-RT

PROPRIETARY AND CONFIDENTIAL
THE INFORMATION CONTAINED IN THIS DRAWING IS THE SOLE PROPERTY OF LARSON ELECTRONICS LLC. ANY REPRODUCTION IN PART OR AS A WHOLE WITHOUT THE WRITTEN PERMISSION OF LARSON ELECTRONICS LLC IS PROHIBITED.

		NAME
DIMENSIONS ARE IN INCHES	DRAWN	CHRIS THAUER
MATERIAL	CHECKED	JEREMY BLANKENSHIP
DO NOT SCALE DRAWING		

SIZE	DWG. NO.	REV
A		
SCALE: 1:15		SHEET 1 OF 3

5 4 3 2 1

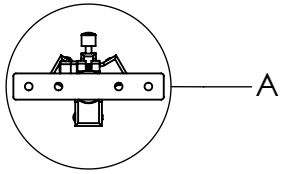

DETAIL A
SCALE 1 : 4

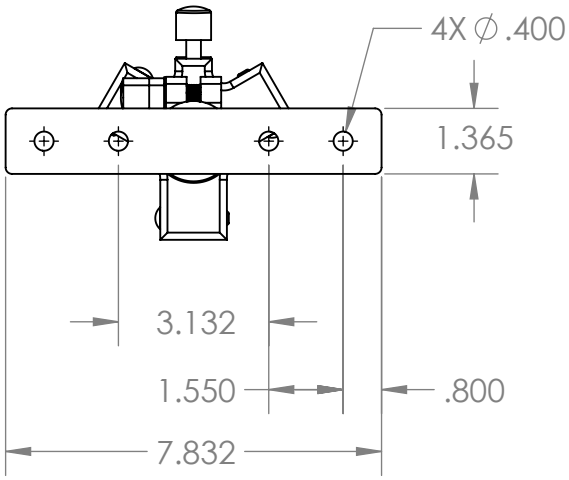

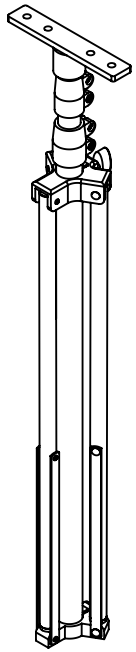

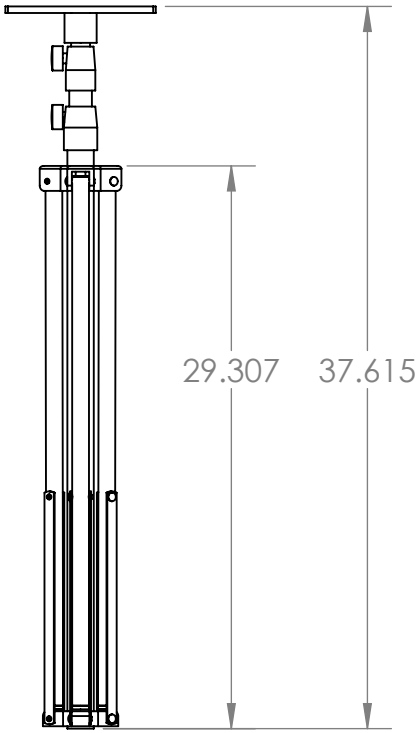

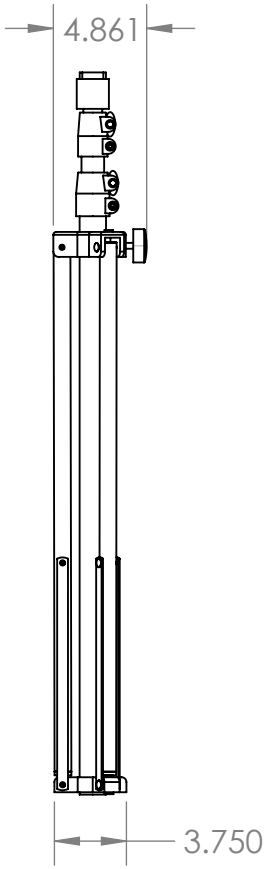

Larson Electronics

TITLE:

EPL-TP.S-50LED-RT

PROPRIETARY AND CONFIDENTIAL
THE INFORMATION CONTAINED IN THIS DRAWING IS THE SOLE PROPERTY OF LARSON ELECTRONICS LLC. ANY REPRODUCTION IN PART OR AS A WHOLE WITHOUT THE WRITTEN PERMISSION OF LARSON ELECTRONICS LLC IS PROHIBITED.

		NAME
DIMENSIONS ARE IN INCHES	DRAWN	CHRIS THAUER
MATERIAL	CHECKED	JEREMY BLANKENSHIP
DO NOT SCALE DRAWING		

SIZE	DWG. NO.	REV
A		
SCALE: 1:10		SHEET 2 OF 3

5 4 3 2 1

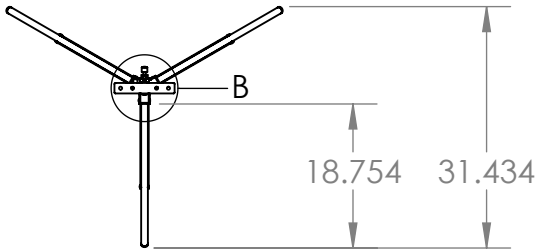

DETAIL B
SCALE 1 : 4

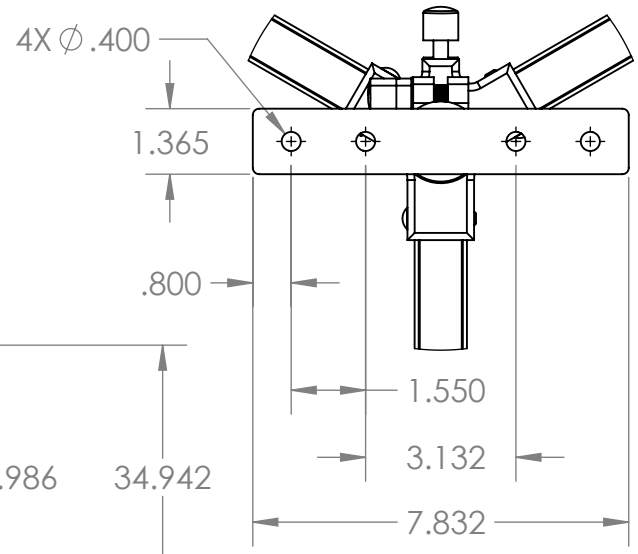

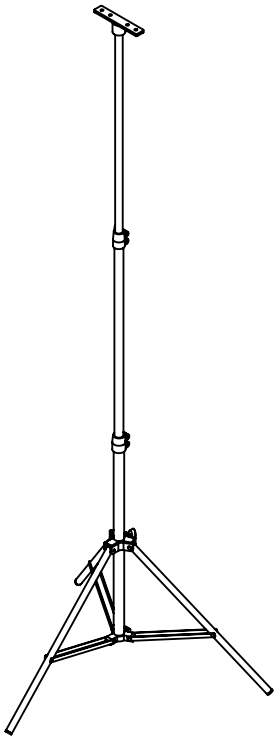

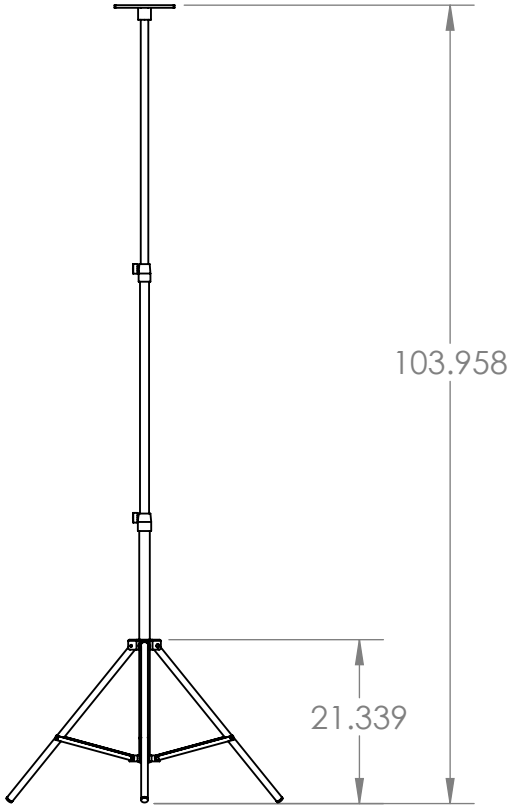

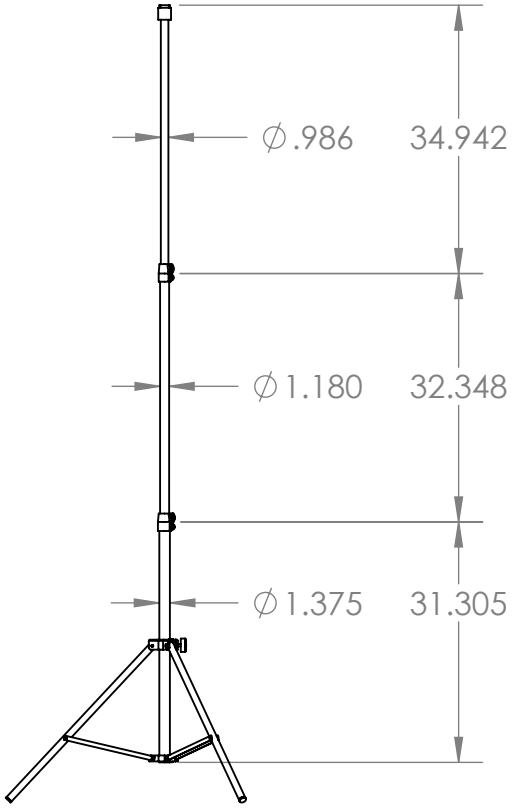

Larson Electronics

TITLE:

EPL-TP.S-50LED-RT

PROPRIETARY AND CONFIDENTIAL
THE INFORMATION CONTAINED IN THIS DRAWING IS THE SOLE PROPERTY OF LARSON ELECTRONICS LLC. ANY REPRODUCTION IN PART OR AS A WHOLE WITHOUT THE WRITTEN PERMISSION OF LARSON ELECTRONICS LLC IS PROHIBITED.

		NAME
DIMENSIONS ARE IN INCHES	DRAWN	CHRIS THAUER
MATERIAL	CHECKED	JEREMY BLANKENSHIP
DO NOT SCALE DRAWING		

SIZE	DWG. NO.	REV
A		
SCALE: 1:25		SHEET 3 OF 3

5 4 3 2 1

Larson Electronics LLC
9419 E US HWY 175, Kemp, TX 75143
Phone: 800.369.6671

www.LarsonElectronics.com
Email: sales@LarsonElectronics.com
Fax: 903.765.7664

Larson Electronics LLC
9419 E US HWY 175, Kemp, TX 75143
Phone: 800.369.6671

www.LarsonElectronics.com
Email: sales@LarsonElectronics.com
Fax: 903.765.7664

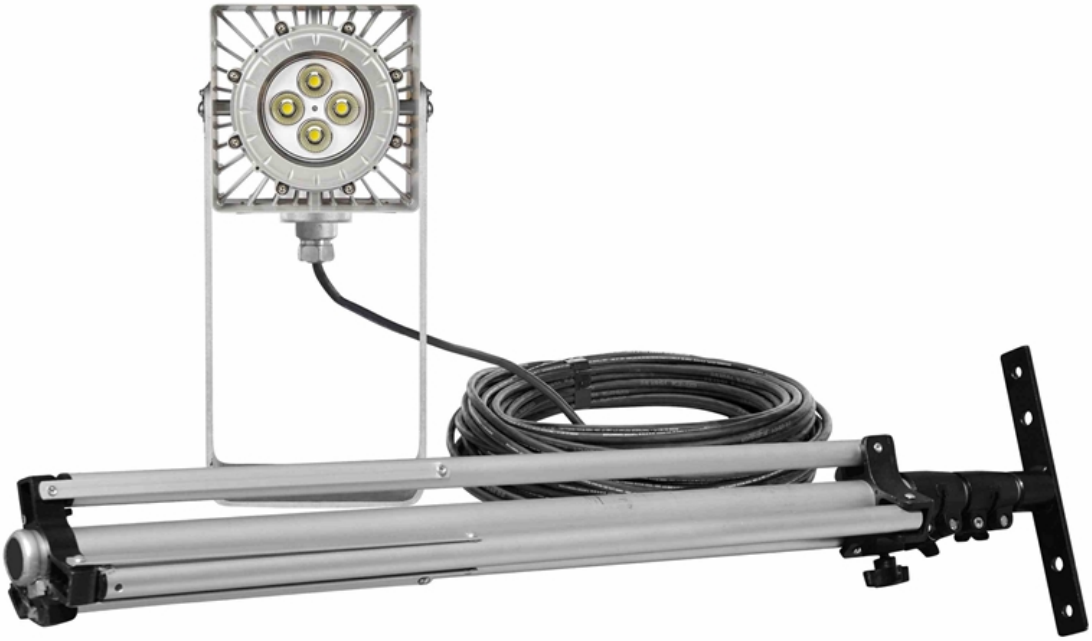

Larson Electronics LLC
9419 E US HWY 175, Kemp, TX 75143
Phone: 800.369.6671

www.LarsonElectronics.com
Email: sales@LarsonElectronics.com
Fax: 903.765.7664

Larson Electronics LLC
9419 E US HWY 175, Kemp, TX 75143
Phone: 800.369.6671

www.LarsonElectronics.com
Email: sales@LarsonElectronics.com
Fax: 903.765.7664

Material Safety Data Sheet

To Whom It May Concern,

Larson Electronics LLC EPL-TP.S-50LED-RT-3C industrial line of portable LED lights for hazardous locations are considered "ARTICLES" under 29 CFR 1910-1200, the OSHA Hazard Communication Standard, and do not require a Material Safety Data Sheet (MSDS).

Articles are specifically exempt from the regulations of this standard. OSHA defines an article as follows:

1910-1200(c) – Article means a manufactured item other than a fluid or particle:

i. Which is formed to a specific shape or design during manufacture;
ii. Which has end use function(s) dependent in whole or in part upon its shape or design during end use; and
iii. Which under normal conditions does not release more than very small quantities.

Regards,

Ray Smith
Larson Electronics, LLC.

LARSON ELECTRONICS LLC • 9419 E US HWY 175 • KEMP, TX 75143
p: 1-800-369-6671 • intl: 903-498-3363 • f: 903-498-3364 • sales@larsonelectronics.com

Larson Electronics LLC
9419 E US HWY 175, Kemp, TX 75143
Phone: 800.369.6671

www.LarsonElectronics.com
Email: sales@LarsonElectronics.com
Fax: 903.765.7664

Frequently Asked Questions (FAQ)

There are no Faqs